HunterDouglas

Installation • Operation • Care

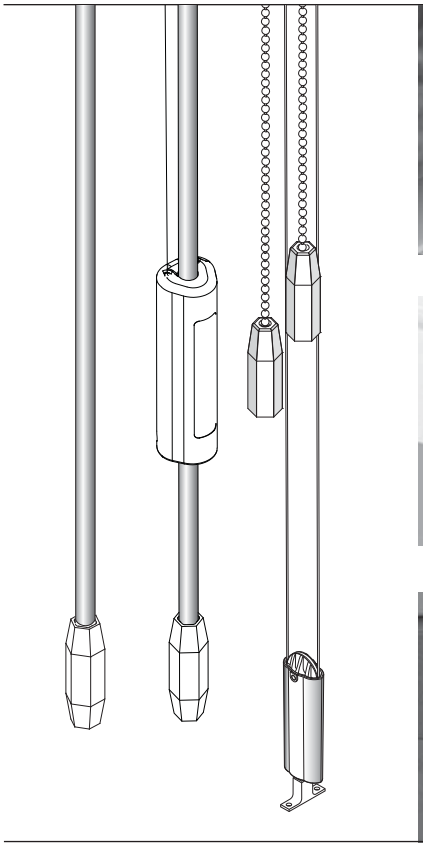

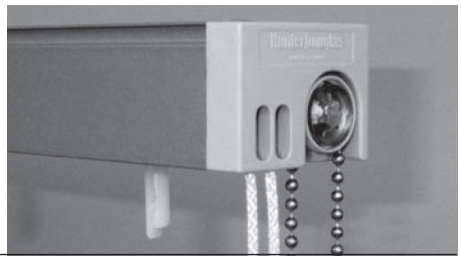

Vertical Blind Collection

Paramount®, PermAlign®, and PermaTrak®
Headrail Systems

CONTENTS

Getting Started:

Product View 1
Tools and Fasteners Needed 2

Installation:

Installation Overview 3
Mounting Types and Window Terminology 3
Valance Assembly 4
Mount the Installation Brackets — Inside Mount 7
Mount the Installation Brackets — Outside Mount 9
Install the Vanes 10
Attach the Vertical Cord Tensioner 11
Cord Adjustment — Cord and Chain Only 12

Operation:

Split Stack Blind Operation 13
Side Stack Blinds Operation 14

Care:

Removing the Headrail (If Necessary) 16
Removing the Vanes (If Necessary) 16
Cleaning Procedures 16

Child Safety:

Warning 17
Cord Loop Blinds 17

Questions?

Call the Hunter Douglas Customer Information Center at
1-888-501-8364.

© 2014 Hunter Douglas. All rights reserved. All trademarks used herein are the property of Hunter Douglas.

Product View

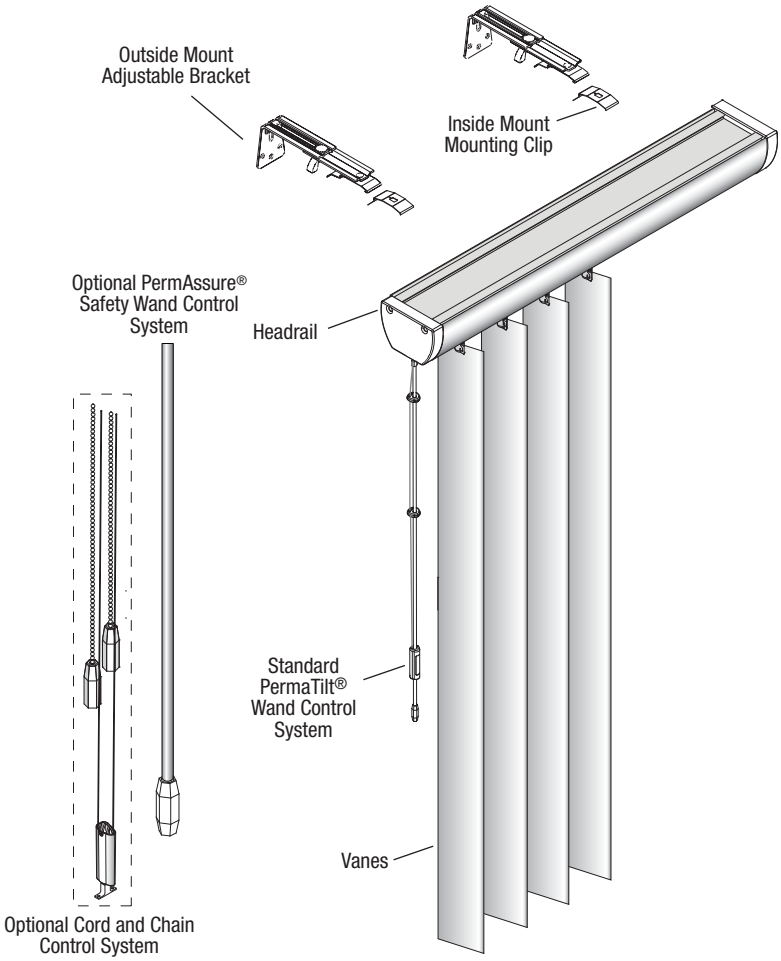

GETTING STARTED

Thank you for purchasing Hunter Douglas Vertical Blinds. With proper installation, operation, and care, your new blind will provide years of beauty and performance.

Please thoroughly review this instruction booklet and the enclosed packing list before beginning the installation.

Illustrations throughout these instructions show the PermaTrak® headrail. Instructions are the same for the Paramount® and PermAlign® headrails.

Tools and Fasteners Needed

- Flat blade and Phillips screwdriver
- Level (laser level is recommended)
- Measuring tape and pencil
- Power drill, 3⁄32" drill bit, and ¼" hex driver

In addition, you will need fasteners designed to work with your specific mounting surface(s).

- **#6 Hex Head Screws (Provided).** Two 1½" screws are provided per installation bracket.
- **Speed Nuts and Screws (Provided).** Extension brackets come with speed nuts and screws.
- **Drywall Anchor (Not Provided).** Use drywall anchors when mounting into drywall.

#6 x 1½"
Hex Head Screw
(Provided)

Speed Nut
and Screw
(Provided with Each
Optional Extension Bracket)

Installation Overview

- Your order will include installation brackets specific to your blind. The number of installation brackets required varies with headrail width, as shown in the table.

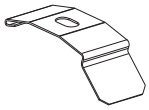

Blind Width	Brackets Required
15" – 48"	2
48 1/8" – 72"	3
72 1/8" – 96"	4
96 1/8" – 120"	5
120 1/8" – 144"	6
144 1/8" – 168"	7
168 1/8" – 192"	8
192 1/8" – 216"	9
216 1/8" – 240"	10
240 1/8" – 264"	11
264 1/8" – 288"	12
288 1/8" – 300"	13

Mounting Types and Window Terminology

If the installation brackets are mounted correctly, the rest of the installation process follows very easily. To prepare for this important first step, review the mounting types and basic window terminology illustrated below.

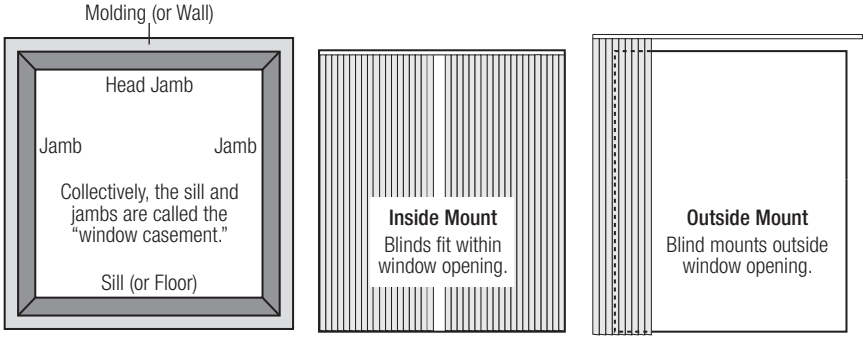

- **If your blind has a valance go to — page 4.** Otherwise, go to your mounting option below:
  - ➤ **Inside Mount — page 7**
  - ➤ **Outside Mount — page 9**

INSTALLATION

Valance Assembly

Please refer to the section below for your valance type.

Crestover™ Wood Valance (Using Dovetail Corner Clips) Assembly

- Slide the two dovetail clips attached to the wood valance face into the corresponding grooves on the valance returns.

  NOTE: If the returns are too long, they can be shortened using a cut-off saw to remove material from the back edge. Do not cut the miter corners to shorten the returns.

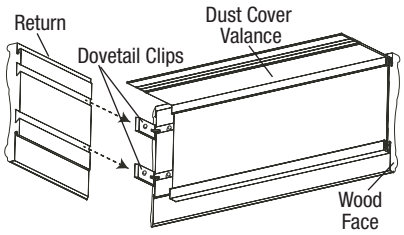

Proceed to "Mount the Installation Brackets — Inside Mount" on page 7 or "Mount the Installation Brackets — Outside Mount" on page 9 based on the mounting option ordered.

Dust Cover Valance Assembly

Single-Tiered Closed Corner

- Cut a fabric insert for the valance and each valance return 1" longer at each end than the valance and valance return width.
- Center the fabric insert in the valance and wrap the excess on each side around to the back of the valance.
- At one end, hold the fabric insert in place with a corner clip.
- At the opposite end, pull the fabric insert tight and secure it in place with another corner clip.
- Center each valance return fabric insert and wrap the excess on each side around to the back of the valance return.
- Attach the valance return to the valance using the already attached corner clip.
- At the opposite end of the valance return, pull the fabric insert tight and secure it in place with a valance return clip.

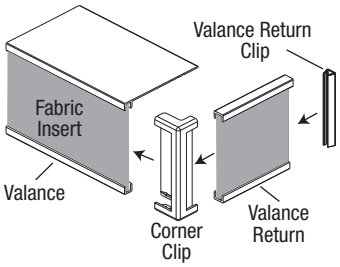

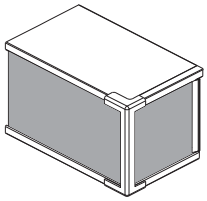

- Repeat the previous 4 steps for the other valance return.

  IMPORTANT: Vinyl inserts should be cut flush with the ends of the valance and valance returns. Secure vinyl in place with the corner clip and valance return clips.

Proceed to "Mount the Installation Brackets — Inside Mount" on page 7 or "Mount the Installation Brackets — Outside Mount" on page 9 based on the mounting option ordered.

Single-Tiered Open Corner (Fabric Only)

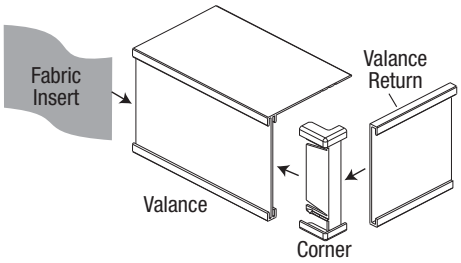

- Cut a fabric insert long enough to wrap around the corner and over the entire return plus at least 1" excess at each end.
- Attach the corner clip and valance returns.
- Insert the fabric into the valance, wrap it through the corner clip and into the valance return.

  IMPORTANT: Leave extra fabric at the other end of the fabric insert to be able to wrap around the other valance return.
- Wrap excess fabric around the end of the valance return and secure it with a valance return clip.
- Repeat steps 3–4 for the other valance return.

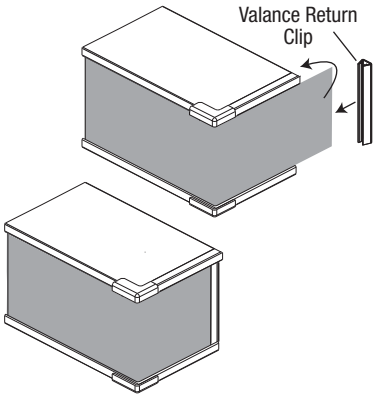

Proceed to "Mount the Installation Brackets — Inside Mount" on page 7 or "Mount the Installation Brackets — Outside Mount" on page 9 based on the mounting option ordered.

Single-Tiered Round Corner

- Install the round valance corners onto each end of the valance.
- Install the valance returns onto each end of the round valance corners.

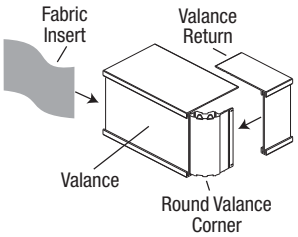

INSTALLATION

- Cut the fabric insert 4" longer than the total length of the valance plus both returns.

  NOTE: Vinyl inserts should be cut flush with the ends of the valance returns. Secure vinyl in place with the valance return clips.

- Place the fabric insert into the clear lips of the valance, continuing around the molded valance corner and through the valance return.

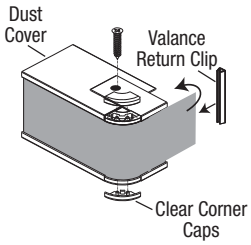

- Wrap excess fabric around the end of the valance return and secure it with a valance return clip.
- From the other end of the fabric insert, pull the fabric tight, repeating the previous 2 steps.
- Attach the clear corner caps onto the valance corners, top and bottom.
- Use a (#4) 1/2" screw to secure each valance return onto the dust cover valance surface.

Proceed to "Mount the Installation Brackets — Inside Mount" on page 7 or "Mount the Installation Brackets — Outside Mount" on page 9 based on the mounting option ordered.

Double-Tiered Round Corner

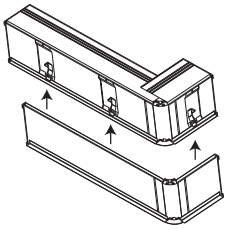

- To install the double-tiered universal round corner valance, follow the instructions for the single-tiered universal round corner valance. The corner caps are installed on the top and bottom of the upper valance and *only* on the bottom of the lower valance.
- Install the valance stacking clips into the back lips of the (upper) dust cover valance, and space 24" apart. For an outside (OB) mount only, add an additional stacking clip to each return.

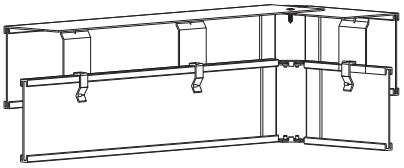

Proceed to "Mount the Installation Brackets — Inside Mount" on page 7 or "Mount the Installation Brackets — Outside Mount" on page 9 based on the mounting option ordered.

Mount the Installation Brackets — Inside Mount

- Mark 2" – 4" in from each jamb. Measure and mark the underside of the dust cover, if ordered.
  - ➤ If more than two installation brackets came with your order, space additional bracket(s) evenly in 24"– 30" intervals between the end brackets and mark their location. Mount into wood whenever possible.

    IMPORTANT: Allow ½" clearance between vane and window.

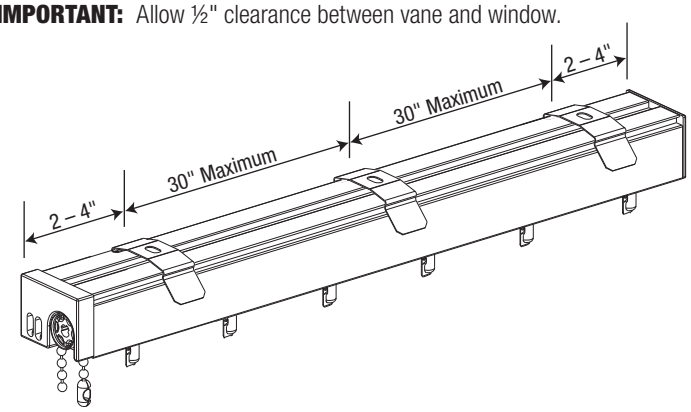

Install Mounting Clips

- Drill the screw holes using a 3⁄32" drill bit.

  IMPORTANT: Use drywall anchors when mounting into drywall. Drywall anchors are not provided.
  - ➤ If you did not order a valance, drill directly into the ceiling/head jamb.
  - ➤ If you ordered a dust cover valance, drill through the rear groove of the dust cover valance then into the ceiling/head jamb.
- Attach the mounting clip using the screws provided.
  - ➤ Hold the valance in position, the screw will go (through the valance, if ordered) into the ceiling/head jamb.

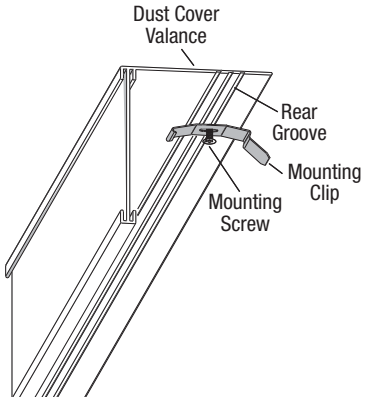

INSTALLATION

- Center the headrail underneath the mounting clips.

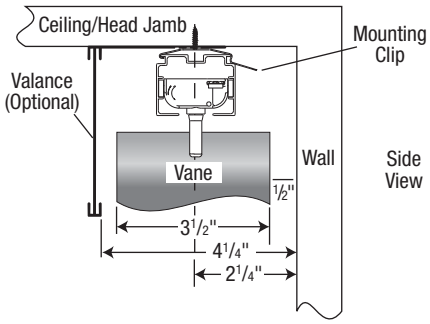

- Tilt the headrail and insert it into the front edge of the mounting clips. Pull forward, then roll the headrail back toward the rear of the blind. Push up and snap into place.

Paramount® Headrail

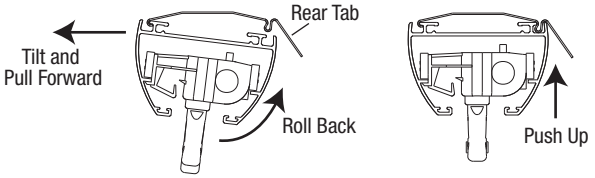

PermaTrak® and PermAlign® Headrail

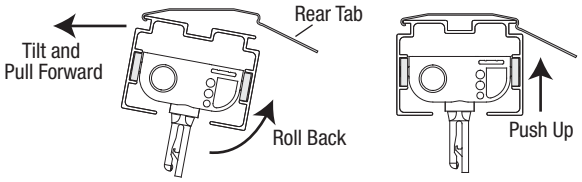

Proceed to "Install the Vanes" on page 10.

Mount the Installation Brackets — Outside Mount

- Mark 2" – 4" in from each jamb.
  - ➤ If more than two “L” installation brackets came with your order, space additional bracket(s) evenly in 24" – 30" intervals between the end brackets and mark their location. Mount into wood whenever possible.
  - ➤ Adjust mounting clips to allow 1/2" clearance between the vane and the wall (i.e. 2 1/4" for 3 1/2" vane).

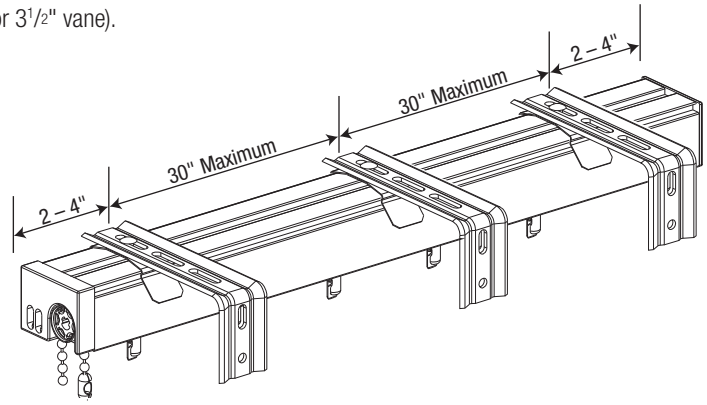

- Drill the screw holes using a 3/32" drill bit.

  IMPORTANT: Use drywall anchors when mounting into drywall. Drywall anchors are not provided.
- Attach the brackets using the screws provided.
- Center headrail underneath mounting clips.
- Tilt the headrail and insert it into the front edge of the mounting clip. Pull and roll the headrail up toward the rear of the blind and snap into place.

Paramount® Headrail

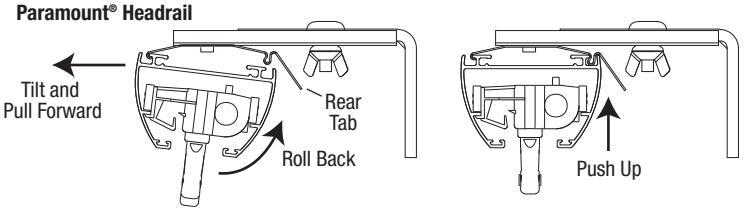

PermaTrak® and PermAlign® Headrail

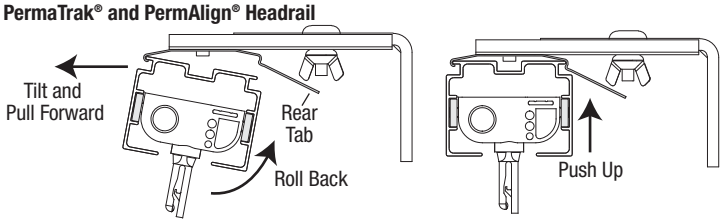

INSTALLATION

- If a valance is included, “snap” on a valance hanger next to each “L” bracket.
- Center the valance in relationship to the headrail and slide it into the valance hangers.

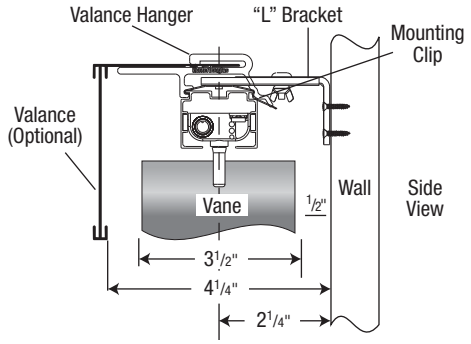

Install the Vanes

- Determine the desired light/view direction.

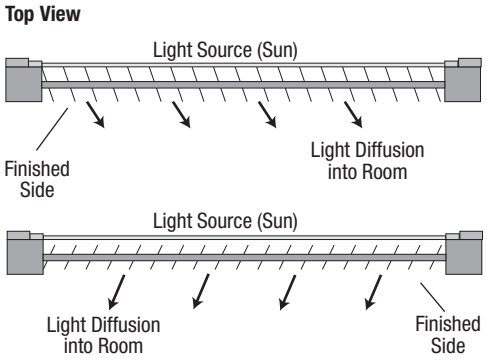

- Rotate the vane hooks so the slot between the long and the short prong is facing you.
- Push the vane into the hook until it “snaps” into place.

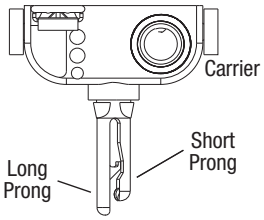

Attach the Vertical Cord Tensioner

Before doing anything, you ***must*** first slide the vertical cord tensioner to the bottom of the cord loop.

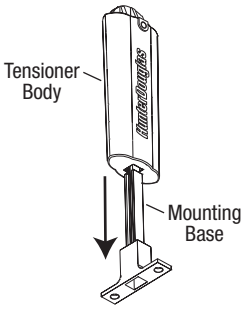

- To release the cord tensioner, pull the mounting base down, away from the tensioner body.
- Slide the cord tensioner down to the bottom of the cord loop.
- Install the blind and use the instructions in the *Vertical Cord Tensioner Kit* to secure the cord tensioner to the window casement.

WARNING: It is imperative that the cord tensioner be properly secured to the wall or window frame to reduce children's access to the cord loop. Young children can strangle in cord loops. They can also wrap cords around their necks and strangle.

CAUTION: The blind will not operate properly unless the cord tensioner(s) is secured. A *Vertical Cord Tensioner Installation Kit* has been included with your blind. Follow the instructions in the kit to correctly secure the cord tensioner(s).

Cord Adjustment

NOTE: Cord length and/or tension cannot be adjusted for PermaTilt® Wand Control System. It is set in the factory to help ensure that the product meets cord safety standard.

To reduce cord length on a Side Draw Blind:

- Open the blind.
- Release the cord tensioner by removing the screws.
- Locate the cord knot in the front of the lead carrier.
- Pull the cord to the desired length.
- Tie a double knot.
- Re-install the cord tensioner with the screws.
- Test for proper cord tension.
- Cut the excess cord.

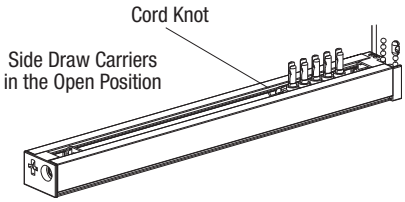

To reduce cord length on Center Draw Blinds:

- Release the cord tensioner by removing the screws.
- Place the blind in the closed position.
- Locate the cord ends in the front of the lead carrier.
- Select the cord knot that adjusts the cord length only; if carrier movement is observed, select the other cord.

  CAUTION: Cutting the wrong cord will cause irreparable damage.

- Pull the cord to the desired length.
- Tie a double knot.
- Re-install the cord tensioner with the screws.
- Test for proper cord tension.
- Cut the excess cord.

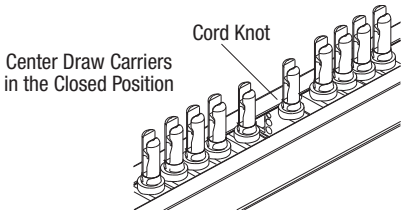

Split Stack Blind Operation

PermaTilt® Wand Control

NOTE: Cord length and/or tension cannot be adjusted for PermaTilt® Wand Control System. It is set in the factory to help ensure that the product meets cord safety standards.

- **Tilting.** (gray arrows) When tilting your vanes use one hand to hold the tether to keep it from moving, while turning the wand handle with your other hand. This prevents the tensioned cord from twisting.
- **Traversing.** (black arrows) When traversing your vanes use one hand to hold the tether to keep it from moving, while pulling the tensioned cord up or down with your other hand.

  NOTE: Do not over torque the wand. It can cause the vanes to kick out at the bottom of the blind.

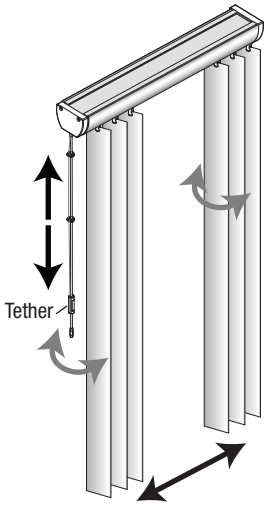

Cord and Chain Operated

- Use the pull cords attached to the cord tensioner to open and close the blind (black arrows).
- Use the tassels and chains to rotate the vanes open or closed (gray arrows).

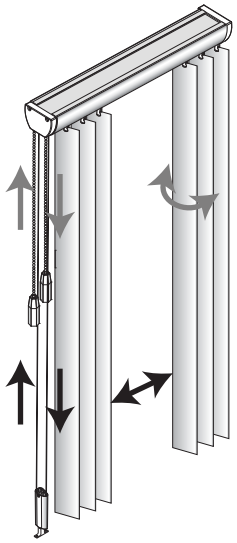

PermAssure® Safety Wand

- Push or pull the wand to open or close the vanes (black arrows).

  NOTE: Please do not bow the wand. Hold the wand at a 45˚ angle. Push or pull the wand to open or close the vanes.

- Twist the safety wand to open or close the vanes (gray arrows).

  IMPORTANT: Do not over torque the wand. It can cause the vanes to kick out at the bottom of the blind.

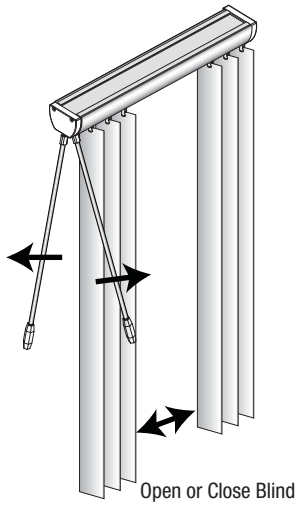

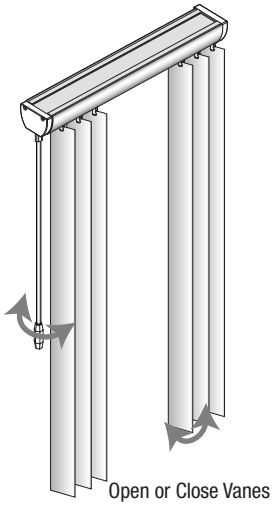

Side Stack Blinds Operation

PermaTilt® Wand Control

NOTE: Cord length and/or tension cannot be adjusted for PermaTilt® Wand Control System. It is set in the factory to help ensure that the product meets cord safety standards.

- **Tilting.** (gray arrows) When tilting your vanes use one hand to hold the tether to keep it from moving, while turning the wand handle with your other hand. This prevents the tensioned cord from twisting.
- **Traversing.** (black arrows) When traversing your vanes use one hand to hold the tether to keep it from moving, while pulling the tensioned cord up or down with your other hand.

  NOTE: Do not over torque the wand. It can cause the vanes to kick out at the bottom of the blind.

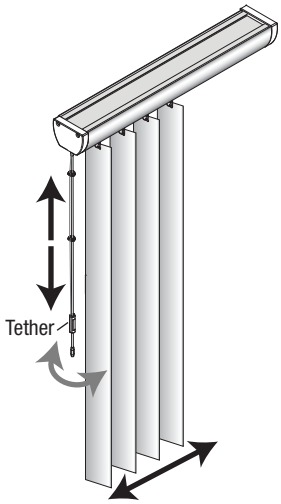

Cord and Chain Operated

- Use the pull cords attached to the cord tensioner to open or close the vanes (black arrows).
- Use the tassels and chains to rotate the vanes open or closed (gray arrows).

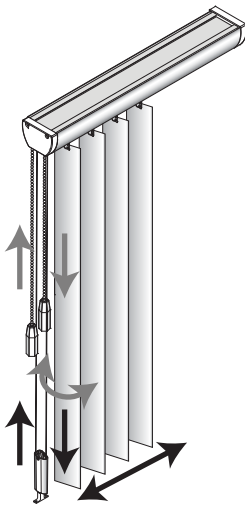

PermAssure® Safety Wand

- Push or pull the wand to open or close the vanes (black arrows).

  NOTE: Please do not bow the wand. Hold the wand at a 45˚ angle. Push or pull the wand to open or close the vanes.

- Twist the safety wand to open or close the vanes (gray arrows).

  IMPORTANT: Do not over torque the wand. It can cause the vanes to kick out at the bottom of the blind.

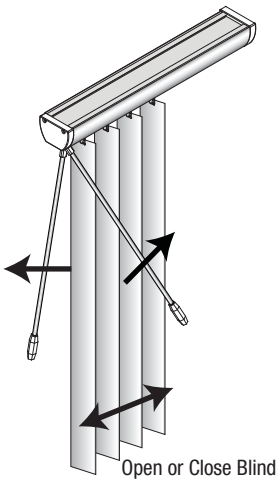

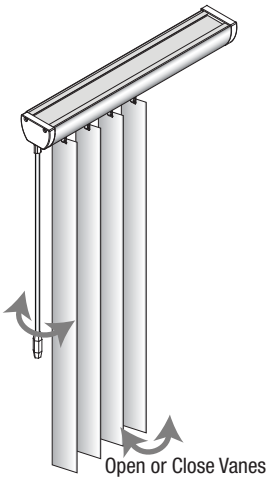

Removing the Headrail (If Necessary)

- To remove the headrail, locate the rear tab on the mounting clip.
- Push up on the rear tab to release the headrail.

Paramount® Headrail

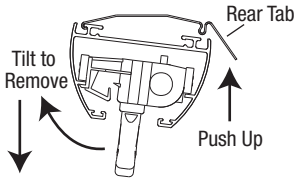

PermaTrak® and PermAlign® Headrail

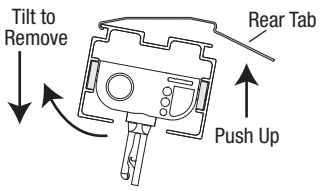

Removing the Vanes (If Necessary)

- Push up on the vane.
- Gently open the vane hook by inserting a ‘credit card’ sized piece of rigid plastic between the vane and the long prong of the vane hook.
- Carefully remove the vane.

Cleaning Procedures

Dusting

- Regular light dusting with a feather duster is all the cleaning that is needed in most circumstances.

Vacuuming

- Use a hand-held vacuum with low suction for more thorough dust removal.

Spot-Cleaning

- Prepare a solution of warm water and a mild detergent.
- Dampen a clean cloth in the solution and wring it out.
- Dab the spot with the dampened cloth until it is gone.

  CAUTION: Vertical fabrics should not be spot-cleaned or immersed in water.

Compressed Air

- You can use compressed air or a hair dryer (cool setting) to blow the dust off your valance.

WARNING

For more safety information call 1-888-501-8364 in the U.S. or 1-866-662-0666 in Canada.

Young children can STRANGLE in cord loops. They can also wrap cords around their necks and STRANGLE.

- **Always keep cords out of the reach of children.**
- **Move cribs, playpens and other furniture away from cords. Children can climb furniture to get to cords.**
- **Do not tie cords together. Make sure cords do not twist together and create a loop.**

Cord Loop Blinds

- **Attach the cord tensioner on the cord loop to the wall or window casement. See "Attach the Vertical Cord Tensioner" on page 11. This can prevent children from pulling cord loops around their necks.**
- **Hunter Douglas provides a cord tensioner installation kit with instructions for attaching the cord tensioner. For the blind to operate properly, the cord tensioner must be correctly mounted and secured.**
- **Fasteners provided in the *Vertical Cord Tensioner Kit* may not be appropriate for all mounting surfaces. Use appropriate anchors for the mounting surface conditions.**
- **Only Hunter Douglas supplied cord tensioners and hardware should be used. Replacement parts may be obtained by contacting the Hunter Douglas Customer Information Center at 1-888-501-8364.**

LIFETIME GUARANTEE

The Hunter Douglas® Lifetime Guarantee is an expression of our desire to provide a thoroughly satisfying experience when selecting, purchasing and living with your window fashion products. If you are not thoroughly satisfied, simply contact Hunter Douglas at (888) 501-8364 or visit hunterdouglas.com. In support of this policy of consumer satisfaction, we offer our Lifetime Limited Warranty as described below.

COVERED

BY A LIFETIME LIMITED WARRANTY

- Hunter Douglas window fashion products are covered for defects in materials, workmanship or failure to operate for as long as the original retail purchaser owns the product (unless shorter periods are provided below).
- All internal mechanisms.
- Components and brackets.
- Fabric delamination.
- Operational cords for a full 7 years from the date of purchase.
- Repairs and/or replacements will be made with like or similar parts or products.
- Hunter Douglas motorization components are covered for 5 years from the date of purchase.

NOT COVERED

BY A LIFETIME LIMITED WARRANTY

- Any conditions caused by normal wear and tear.
- Abuse, accidents, misuse or alterations to the product.
- Exposure to the elements (sun damage, wind, water/moisture) and discoloration or fading over time.
- Failure to follow our instructions with respect to measurement, proper installation, cleaning or maintenance.
- Shipping charges, cost of removal and reinstallation.

Hunter Douglas (or its licensed fabricator/distributor) will repair or replace the window fashion product or components found to be defective.

TO OBTAIN WARRANTY SERVICE

1. Contact your original dealer (place of purchase) for warranty assistance.
2. Visit hunterdouglas.com for additional warranty information, frequently asked questions and access to service locations.
3. Contact Hunter Douglas at (888) 501-8364 for technical support, certain parts free of charge, for assistance in obtaining warranty service or for further explanation of our warranty.

NOTE: In no event shall Hunter Douglas or its licensed fabricators/distributors be liable or responsible for incidental or consequential damages or for any other indirect damage, loss, cost or expense. Some states do not allow the exclusion or limitation of incidental or consequential damages, so the above exclusion or limitation may not apply to you. This warranty gives you specific legal rights, and you may also have other rights which vary from state to state.

Different warranty periods and terms apply for commercial products and applications.

HunterDouglas

hunterdouglas.com

LIT888914C 2/14