**Installation Instructions**

Original Instructions

Allen-Bradley by ROCKWELL AUTOMATION

# Build Your Own Kinetix TLP Motor Cables

Catalog Numbers 2090-KTPC-MA-AA, 2090-KTPC-MA-AE, 2090-KTFB-MA-AA, 2090-KTFB-MA-AE, 2090-KTBK-MB-AA, 2090-KTBK-MB-AE, 2090-KTFB-MF-AA, 2090-KTFB-MF-AE, 2090-KTPC-MC-AA, 2090-KTPC-MC-AE, 2090-KTPC-MD-AA, 2090-KTPC-MD-AE, 2090-KTPC-ME-AA, 2090-KTPC-ME-AE


| Topic | Page |
|---|---|
| Before You Begin | 1 |
| Wiring Connectors | 2 |
| Rectangular Connectors | 3 |
| Military-style Connectors | 8 |
| Catalog Number Descriptions | 13 |
| Additional Resources | 13 |


For reference, see Kinetix Motion Accessories Specifications Technical Data, publication KNX-TD004, for Kinetix TLP motor and cable combinations and Kinetix TLP motor power and feedback cable specifications.

## Summary of Changes

This manual contains new and updated information as indicated in the following table.

| Topic | Page |
|---|---|
| Added motor/power and brake cable flying-lead strip lengths for Kinetix 5100 and Kinetix 5300 servo drives. | 9 |
| Added 400V-class catalog numbers for Kinetix TLP servo motors. | 13 |

## Before You Begin

Remove all packing material from within and around the item. After unpacking, verify the catalog number against the purchase order, and visually inspect each connector for damage. If necessary, notify the carrier of any shipping damage immediately.

**ATTENTION:** Arcing or unexpected motion can occur if the power, brake, or feedback cables are connected or disconnected while power is applied. Always remove power to the servo drive before connecting or disconnecting cables at the drive or at the motor.

**ATTENTION:** To avoid the hazard of electrical shock, make sure that shielded power cables are grounded at a minimum of one point. To help prevent the build-up of electrical energy, factory-supplied power cables use one of these grounding techniques:

- The overall shield is bonded to the connector housing.
- A section of the overall shield is exposed for connection to ground.
- The overall shield is connected to a ground wire.

If the exposed cable braid or a ground wire is present, connect it to the power cable clamp, housing, or another suitable chassis ground on the drive.

**ATTENTION:** Do not tightly gather or coil the excess length of a power cable. Heat is generated within a cable whenever power is applied. Always position a power cable so it can freely dissipate any heat. A power cable must not be coiled, except for temporary use when building or testing a machine. If you temporarily coil a power cable, you must also derate the cable to meet local code or follow an authoritative directive, such as Engineering Section 310.15(C) of the NEC Handbook.

**IMPORTANT** The following factors must be considered when selecting bulk cable.

- Power cables must be rated to voltage higher than the system voltages at all operating conditions.
- Cable conductor current carrying capacity (after all applicable deratings) must be ≥ the connected motor continuous rated current.
- Cables must meet all local and global regulatory requirements.
- Cable must have overall shield to meet the applicable electromagnetic radiation/emission requirements.

Rockwell Automation

**IMPORTANT** For optimal performance of the system, the power cable capacitance must not exceed.

| **Conductor to Conductor Capacitance:** | | | |
|---|---|---|---|
| 12 AWG or smaller: 120 pF/m | 08 AWG: 150 pF/m | 06 AWG: 160 pF/m | 04 AWG: 190 pF/m |
| **Conductor to Shield Capacitance:** | | | |
| 12 AWG or smaller: 220 pF/m | 08 AWG: 270 pF/m | 06 AWG: 290 pF/m | 04 AWG: 320 pF/m |

## Storage

To help prevent damage to parts you aren't ready for yet, use them on a first in/first out basis and leave them in the original packaging to avoid storage contamination.

**ATTENTION:** Prolonged exposure to ultraviolet light can deteriorate the chemical composition that is used in the product material. Do not store product near any of these chemicals as they can cause stress, corrosion, or cracking in the material: Alkalies, Ammonia, Citrates, Phosphates Citrates, Sulfur Compounds, Amines, Carbonates, Nitrites, Sulfur Nitrites, Tartrates.

**IMPORTANT** Storage temperature for these components is -20...+70 °C (-4...+158 °F).

# Wiring Connectors

Rectangular connectors are used on TLP-x046...TLP-x100 servo motors. Military-style connectors are used on TLP-x115...TLP-x235. For all the connector kit catalog numbers and descriptions, see Catalog Number Descriptions on page 13.

### Figure 1 - Rectangular Connectors

MA-type Power Connector

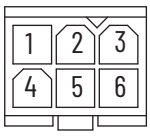


1 - U
2 - V
3 - BR+
4 - W
5 - PE
6 - BR-

MA-type Feedback Connector

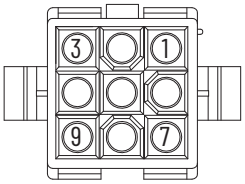


1 - T+
4 - T-
2 - BAT +
5 - BAT-
9 - Shield/Drain
8 - GND
7 - DC +5V

### Figure 2 - Military-style Connectors

MC-type Power Connector

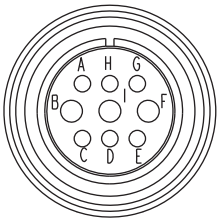


B - W
E - PE
F - U
G - BR+
H - BR-
I - V

MD-type Power Connector

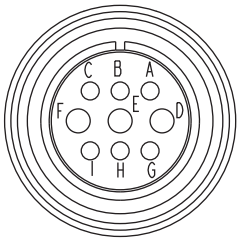


A - BR+
B - BR-
D - U
E - V
F - W
G - PE

ME-type Power Connector

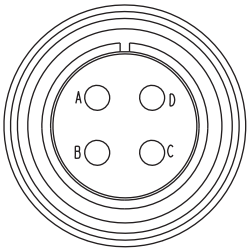


A - U
B - V
C - W
D - PE

MF-type Feedback Connector

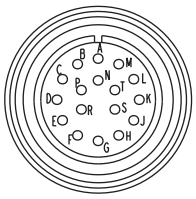

A - T+
B - T-
C - BAT +
D - BAT-
L - Shield/Drain
R - GND
S - DC +5V

MB-type Holding Brake Connector

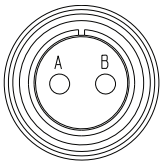


A - BR-
B - BR+

## Rectangular Connectors

Rectangular connector kits are available in 6-pin and 9-pin configurations. There are two 6-pin kits for power/brake, the 2090-KTPC-MA-AA kit for standard cables and the 2090-KTPC-MA-AE kit for extension cables. There are two 9-pin kits for feedback, the 2090-KTFB-MA-AA kit for cables and the 2090-KTFB-MA-AE kit for extension cables. The connector kits include receptacle and pins. The extension kits also include plug and sockets. The 9-pin kits also include plug and receptacle clamps with assembly hardware.

With flying-lead power and feedback conductors prepared at one end of the cable, you assemble the receptacle with crimped sockets and clamp for mating with the on-motor cable. Extension cables can also be assembled.

**Figure 3 - Rectangular Power/Brake Connector Cable Examples**

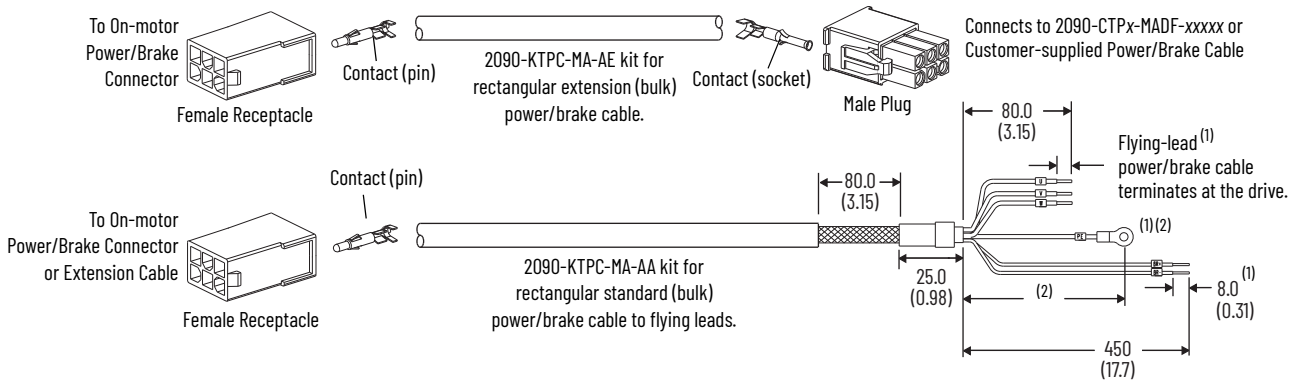


(1) Strip lengths vary slightly, depending on drive requirements. Refer to Ring Lug and Flying-lead Terminations on page 9 for drive specifications.
(2) Attach ring lug on Kinetix 5100 ground connection with 100 mm (3.9 in.) wire length. Kinetix 5300 drives require 80 mm (3.1 in.) wire length for ground connection (no ring lug).

**Figure 4 - Rectangular Feedback Connector Cable Examples**

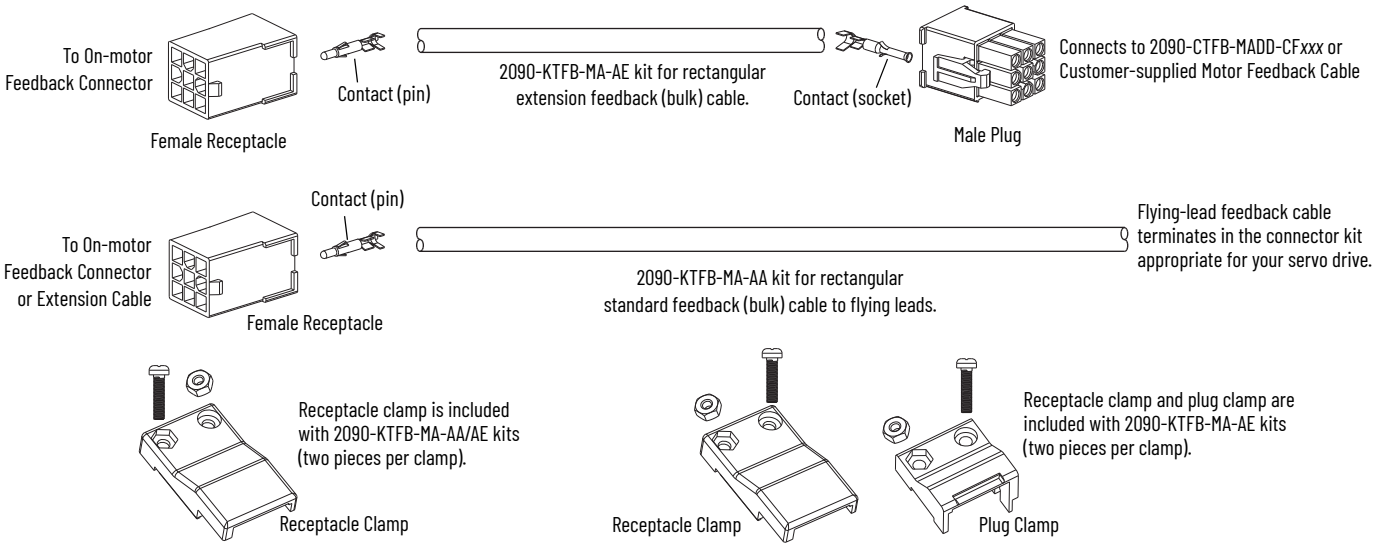


## Wire Selection and Preparation - 6-pin

Standard contacts accept wire size ranges of 22...18 AWG (600...1900 CMA). TPA-compatible contacts accept wire size ranges between 22...18 AWG. Terminate contacts to stranded copper lead wire. The insulation diameter range, strip length, and crimp height are determined by the wire size and are shown below.

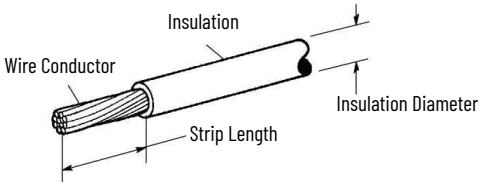


**IMPORTANT** Use caution not to nick, cut, or otherwise damage strands as you remove insulation.

**Table 1 - Wire Preparation Specifications - 6-pin**

| **Wire Size** mm$^2$ (AWG) | **Insulation Diameter Range** mm (in.) | **Wire Strip Length** mm (in.) | **Wire Barrel Crimp Height** mm (in.) |
|---|---|---|---|
| 0.12 (26) | 1.20...1.75 (0.05...0.07) | 3.0...3.5 (0.118...0.138) | 0.65...0.75 (0.026...0.029) |
| 0.2 (24) | | | 0.69...0.79 (0.027...0.031) |
| 0.30 (22) | | | 0.75...0.85 (0.029...0.033) |
| 0.35 (22) | 1.50...3.30 (0.06...0.13) | | |
| 0.5 (20) | | | 0.94...04 (0.037...xxx) |
| 0.87 (18) | | | 1.04...1.14 (0.040...0.045) |
| 0.35 (22) + 0.35 (22) | | 3.5...4.0 (0.138...0.157) | 1.04...1.14 (0.040...0.045) |
| 0.35 (22) + 0.5 (20) | | | 1.17...1.27 (0.046...0.050) |

For optimum crimp performance, the crimp must meet the crimp requirements and be within the area shown in Figure 5 on page 5. The crimp applied to the wire barrel portion of the contact is the most compressed area and is critical to provide the optimum electrical and mechanical performance of the terminated contact. Effective crimp length is defined as that portion of the wire barrel, excluding the bellmouth, fully formed by the crimping tool.

## Wire Selection and Preparation - 9-pin

The contacts accept stranded wire sizes 26...22 AWG within the insulation diameter range listed below. Strip length for one-wire crimping is 3.20...3.71 mm (0.126...0.146 in.) and 3.50...3.99 mm (0.138...0.157 in.) for two-wire crimping.

**ATTENTION:** When stripping the wire, do not scrape, nick, or cut the conductor. Care must also be used when handling the wire during stripping and crimping to prevent cracking or breaking of the conductor and insulation.

**Table 2 - Wire Preparation Specifications - 9-pin**

| **Wire (stranded only)** | | **Wire Barrel Crimp** | | | **Insulation Barrel Crimp Width (for reference only)** mm (in.) |
|---|---|---|---|---|---|
| **Size** AWG | **Insulation Diameter** mm (in.) | **Anvil Die Letter** | **Height** (1) mm (in.) | **Width** mm (in.) | |
| 30 | 1.52 (0.060), max | — | 0.58 (0.023) | 1.07 (0.042) | 1.78 (0.070) |
| 28 | | | 0.58 (0.023) | | |
| 26 | | | 0.64 (0.025) | | |
| 26 | 1.20...1.75 (0.047...0.069) | A | 0.69 (0.027) | 1.07 (0.042) | 2.03 (0.080) |
| 24 | | | | | |
| 22 | | B | 0.78 (0.031) | | |
| 22 | 1.50...2.79 (0.059....110) | A | 0.79 (0.031) | 1.58 (0.062) | 2.79 (0.110) |
| 20 | | | | | |
| 18 | | B | 1.04 (0.041) | | |
| 22 (2 wires) | 1.70 (0.067), max (2 wires) | | | | |

(1) Tolerance for this dimension is ±0.05 mm (±0.002 in.).

The carrier cutoff tab length must not exceed the dimension shown in Figure 6. The insulation barrel must be formed around, but not cut into, the wire insulation. Do not crimp the contact stop. Any deformation to the contact stop compromises the insertion depth of the contact in the contact cavity of the housing. The front bellmouth must be visible. The end of the wire must be flush with the end of the wire barrel or protrude no more than the dimension shown in Figure 6. Do not move or bend the locking lances.

## Crimp a Contact

Force applied during crimping can cause some bending between the crimped wire barrel and the mating portion of the contact. Such deformation is acceptable within the limits shown in Figure 7 (for 6-pin configurations) and Figure 8 (for 9-pin configurations).

**ATTENTION:** Do **NOT** cut or break the wire insulation during the crimping operation. Do not crimp the insulation into the contact wire barrel. Take reasonable care to provide undamaged wire terminations.

The recommended crimp tool for this procedure is PN 91529-1 from TE Connectivity or equivalent.

Follow these steps to crimp a contact to a wire.

1. Insert the wire into the contact.
2. Feed the contact and wire as far as possible to the stop in the positioning insert.
3. Close the crimp tool handles all the way, and then release the handles to allow the crimp tool to open.

   If the crimp tool does not open, the handles were not closed far enough for the crimp to be successful. Continue to close the handles until the crimp tool is able to open.
4. Remove the assembled wire from the tool.

**IMPORTANT** Perform a pull test according to BS EN 60352-2, Table 4, for the first crimp, and periodically throughout multiple crimps.

**Figure 5 - Crimp Location and Contact Requirements - 6-pin**

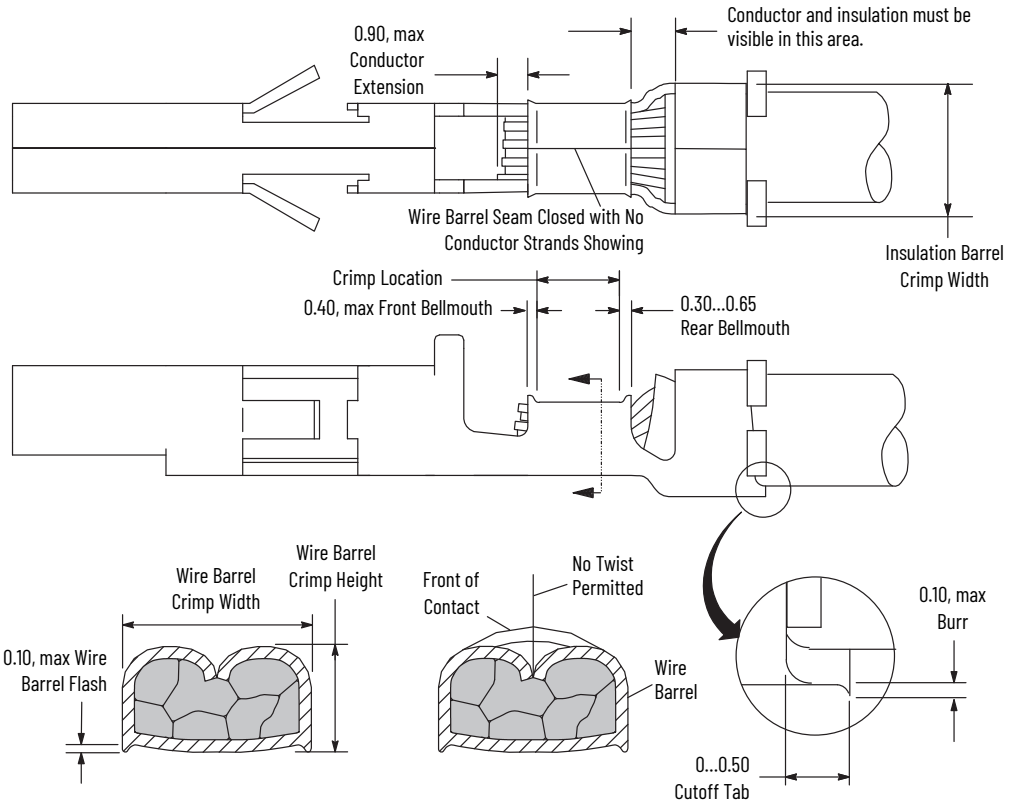

**Figure 6 - Crimp Location and Contact Requirements - 9-pin**

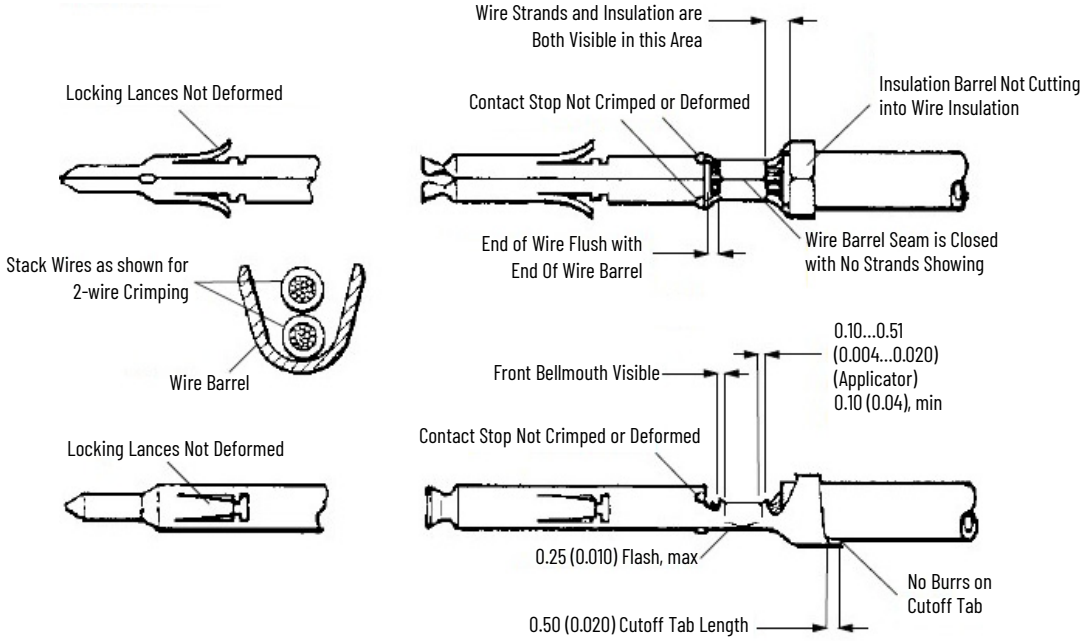


**Figure 7 - Wire Straightness Restrictions - 6-pin**

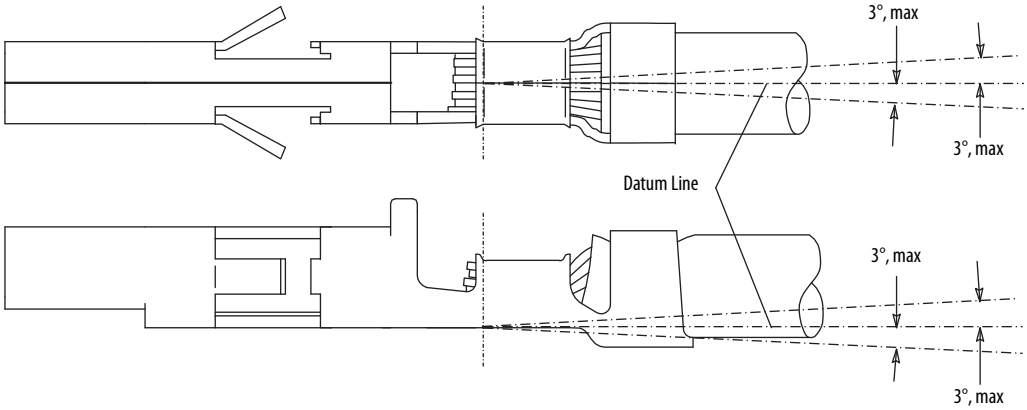


**Figure 8 - Wire Straightness Restrictions - 9-pin**

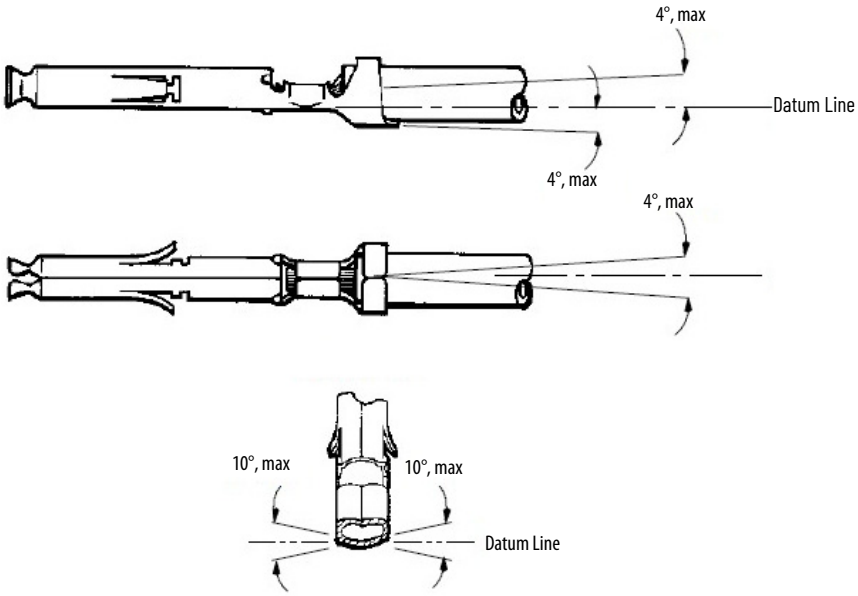

## Contact and Connector Assembly

The procedure for assembling the 6-pin and 9-pin connectors is the same, except that only the 9-pin connector has a clamp. Before you begin this procedure, you must have all wires stripped and crimped. Depending on your configurations, see Wire Selection and Preparation - 6-pin, Wire Selection and Preparation - 9-pin, and Crimp a Contact.

Follow these steps to assemble a rectangular connector.

1. Insert a crimped socket into the back of the (male) plug until it clicks.

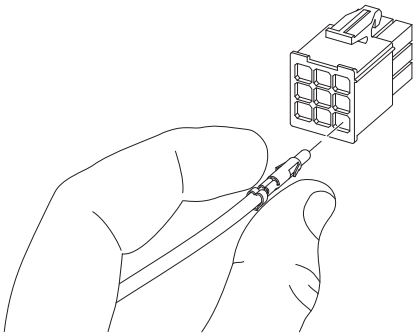

2. Tug slightly on the wire to confirm it is set correctly.

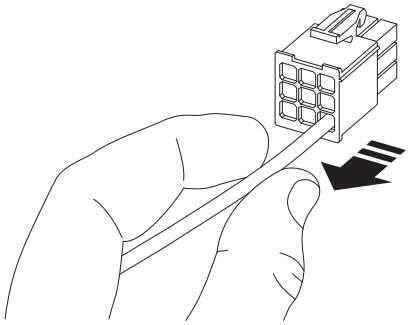

3. Repeat this process for the rest of the sockets and set aside.
4. Insert a crimped pin into the back of the (female) receptacle until it clicks.

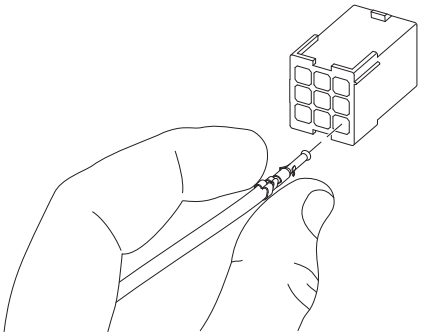

5. Slightly tug on the wire to confirm it is set correctly.
6. Repeat this process for the rest of the pins.
7. Align and assemble the receptacle clamps around the 9-pin receptacle.

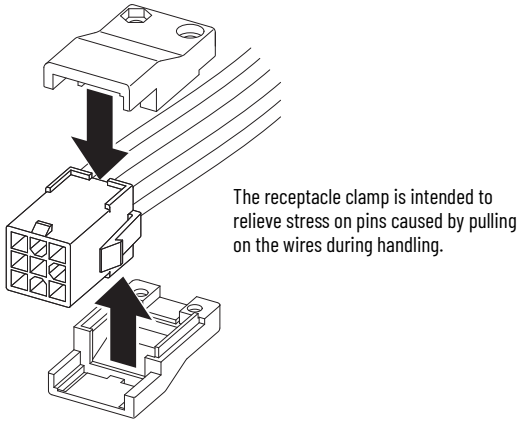


8. Insert the nuts into the assembled 9-pin receptacle clamp.

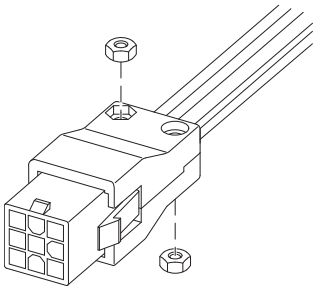

9. Thread the screws through the clamp, into the nut, and hand tighten.

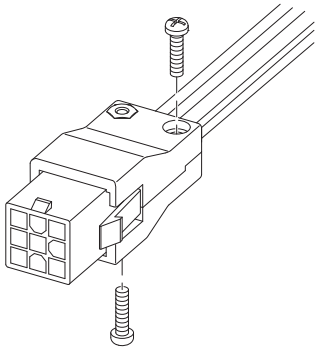

10. Repeat this process for the 9-pin plug clamps.
11. Insert the receptacle into the plug until the two pieces latch together, and verify that plug and receptacle are mated properly.

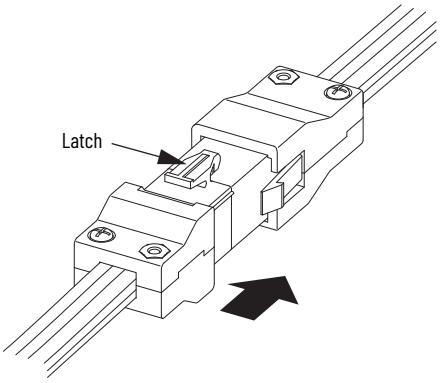


Cable is customer supplied, so cable type varies.

# Military-style Connectors

Military-style connector kits are available in 2-, 4-, 9-, and 17-pin configurations. All kits (catalog numbers 2090-KT*xx*-M*x*-AA/AE) include a receptacle and receptacle body and clamp. The 2090-KT*xx*-M*x*-AE kits also include a plug and plug body and clamp. In this example, the 4-pin plug and receptacle is shown.

**IMPORTANT** The plug bushing and receptacle bushing are installed at the factory and must be removed before installing wires into the plug or receptacle.

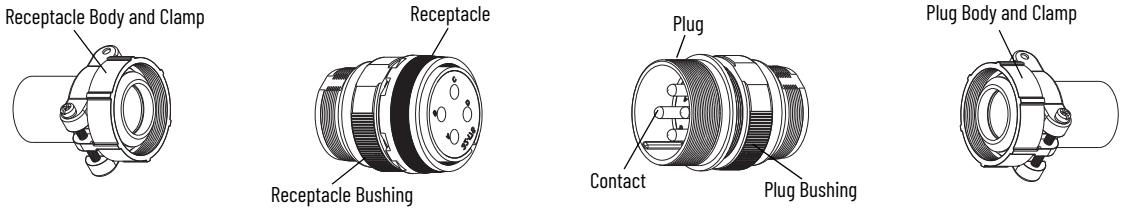


**Figure 9 - Military-style Power/Brake Connector (standard) Cable Examples**

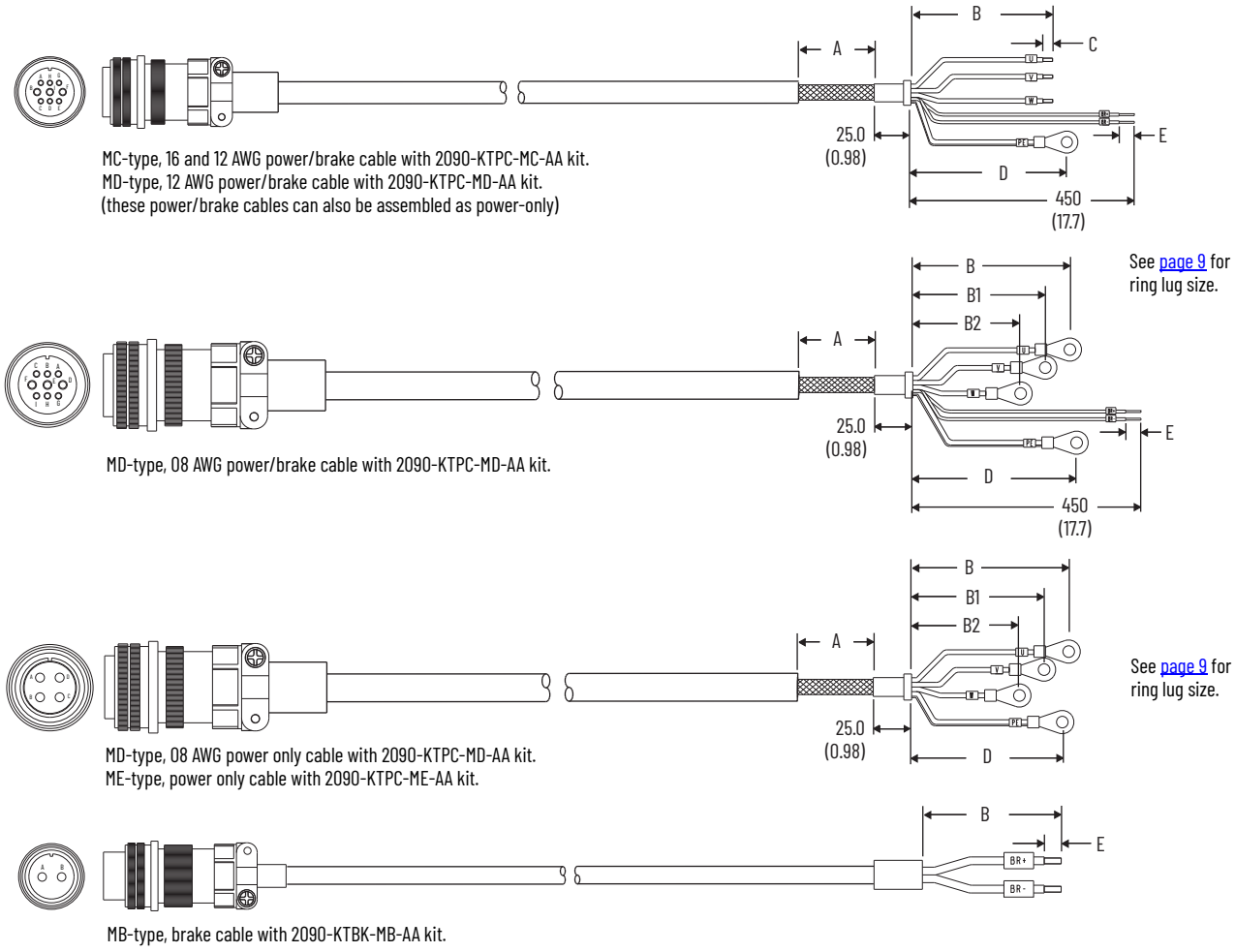


**Table 3 - Military-style Motor Power Flying-lead Dimensions**

| Cable AWG | Connector Type | A mm (in.) | B mm (in.) | B1 mm (in.) | B2 mm (in.) | C mm (in.) | D mm (in.) | E (1) mm (in.) |
|---|---|---|---|---|---|---|---|---|
| 16 | MC-type, power/brake | 80.0 (3.15) | 80.0 (3.15) | – | – | 10.0 (0.39) | 100 (3.94) | 8.0 (0.31) |
| 12 | | 100 (3.94) | 100 (3.94) | – | – | 12.0 (0.47) | 120 (4.72) | |
| 12 | MD-type, power/brake | | | – | – | | | |
| 08 | | | 125 (4.92) | 120 (4.72) | 110 (4.33) | – | 125 (4.92) | |
| 06 | ME-type, power only | | | | | | 115 (4.53) | – |
| 04 | | 80.0 (3.15) | | | | | | |
| 20 | MB-type, brake | – | 80.0 (3.15) | – | – | – | – | 8.0 (0.31) |

(1) Strip lengths vary slightly depending on drive requirements. Refer to Ring Lug and Flying-lead Terminations on page 9 for drive specifications.

**Figure 10 - Military-style Power/Brake Connector (extension) Cable Examples**

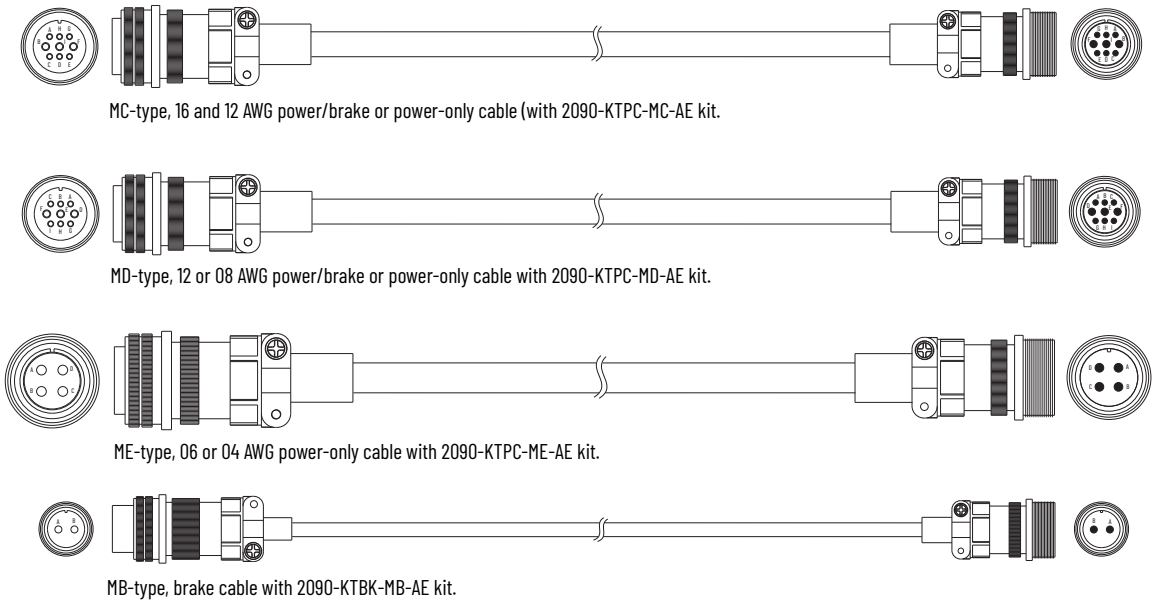


## Ring Lug and Flying-lead Terminations

Ring lugs are recommended for motor power (U, V, W, and PE) connections to Kinetix 5100 drives, as seen in Figure 9 on page 8. The ring lug terminations are applicable to drive catalog numbers 2198-E2055-ERS, 2198-E2075-ERS, 2198-E2150-ERS (200V-class drives), and 2198-E4020-ERS, 2198-E4030-ERS, 2198-E4055-ERS, 2198-E4075-ERS, 2198-E4150-ERS (400V-class drives). The following tables describe the (customer-supplied) ring lugs for each cable size. Ring lugs apply to only the PE conductor on 16...12 AWG cables.

**Table 4 - Kinetix 5100 (200V-class) Ring Lug Specifications**

| Drive Cat. No. | Kinetix TLP Motor Cat. No. | Kinetix TLP Power Cable Cat. No. | Ring Lug Specifications | | | | | |
|---|---|---|---|---|---|---|---|---|
| | | | Military Connector Size | Wire Gauge (AWG) | Screw Size | d2 mm | W mm | Terminal |
| 2198-E2055-ERS | TLP-A200-300, TLP-A200-350 | 2090-CTP*x*-MDDF-12*xxx* | 24-11P (9-pin) | 8 | M6 | Ø6.4 | Ø10.0 | CL10-6 |
| | TLP-A200-450 | 2090-CTP*x*-MDDF-08*xxx* | | | | | | |
| | TLP-A200-550 | 2090-CTPW-MEDF-06*xxx* | 32-17P (4-pin) | 6 | | | Ø12.0 | CL16-6 |
| 2198-E2075-ERS | TLP-A200-550 | | | | | | | |
| | TLP-A200-750 | | | | | | | |
| 2198-E2150-ERS | TLP-A200-750, TLP-A235-11K | | | | | | | |
| | TLP-A235-15K | 2090-CTPW-MEDF-04*xxx* | | 4 | M8 | Ø8.4 | Ø16.0 | RNBS22-8 |

**Figure 11 - Ring Lug Terminal**

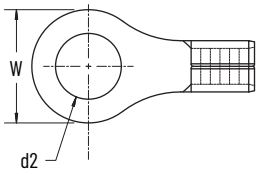

**Table 5 - Kinetix 5100 (400V-class) Ring Lug Specifications**

| Drive Cat. No. | Kinetix TLP Motor Cat. No. | Kinetix TLP Power Cable Cat. No. | Ring Lug Specifications | | | | | |
|---|---|---|---|---|---|---|---|---|
| | | | Military Connector Size | Wire Gauge (AWG) | Screw Size | d2 mm | W mm | Terminal |
| 2198-E4020-ERS | TLP-B145-150, TLP-B145-200, TLP-B115-200 | 2090-CTP*x*-MCDF-16*xxx* | 24-11P (9-pin) | 8 | M6 | Ø6.4 | Ø10.0 | CL10-6 |
| 2198-E4030-ERS | TLP-B115-200, TLP-B145-200 | | | | | | | |
| | TLP-B200-300, TLP-B145-250 | 2090-CTP*x*-MDDF-12*xxx* | | | | | | |
| 2198-E4055-ERS | TLP-B145-250 | | | | | | | |
| | TLP-B200-300 | | | | | | | |
| | TLP-B200-450 | 2090-CTP*x*-MDDF-08*xxx* | | | | | | |
| | TLP-B200-550 | | | | | | | |
| 2198-E4075-ERS | TLP-B200-450, TLP-B200-550, TLP-B200-750 | | | | | | | |
| 2198-E4150-ERS | TLP-B200-450, TLP-B200-550, TLP-B200-750 | | | | | | | |
| | TLP-B235-11K | 2090-CTPW-MEDF-06*xxx* | 32-17P (4-pin) | 6 | | | Ø12.0 | CL16-6 |
| | TLP-B235-14K | 2090-CTPW-MEDF-04*xxx* | | 4 | M8 | Ø8.4 | Ø16.0 | RNBS22-8 |

Kinetix 5300 drives support flying-lead terminations for all motor power/brake cable connections. Kinetix 5100 drives support flying-lead motor power cable connections for catalog numbers 2198-E1004-ERS, 2198-E1007-ERS, 2198-E1015-ERS, 2198-E1020-ERS, 2198-E2030-ERS, 2198-E4004-ERS, 2198-E4007-ERS, and 2198-E4015-ERS.

**Table 6 - Kinetix 5300 Flying-lead Specifications**

| Drive Cat. No. | Terminals | Strip Length mm (in.) |
|---|---|---|
| 2198-C1004-ERS<br>2198-C1007-ERS<br>2198-C4004-ERS<br>2198-C4007-ERS<br>2198-C1015-ERS<br>2198-C1020-ERS<br>2198-C4015-ERS<br>2198-C4020-ERS<br>2198-C4030-ERS | U<br>V<br>W<br>⏚ | 8.0<br>(0.31) |
| 2198-C2030-ERS | | 10.0<br>(0.39) |
| 2198-C2055-ERS<br>2198-C2075-ERS<br>2198-C4055-ERS<br>2198-C4075-ERS | | 12.0<br>(0.47) |
| 2198-C*xxxx*-ERS | MBRK+<br>MBRK- | 7.0<br>(0.28) |

**Table 7 - Kinetix 5100 Flying-lead Specifications**

| Drive Cat. No. | Terminals | Strip Length mm (in.) |
|---|---|---|
| 2198-E1004-ERS<br>2198-E1007-ERS<br>2198-E1015-ERS | U<br>V<br>W<br>⏚ | 11.0 (0.4) |
| 2198-E1020-ERS<br>2198-E2030-ERS<br>2198-E2055-ERS<br>2198-E2075-ERS<br>2198-E2150-ERS<br>2198-E4004-ERS<br>2198-E4007-ERS<br>2198-E4015-ERS<br>2198-E4020-ERS<br>2198-E4030-ERS<br>2198-E4055-ERS<br>2198-E4075-ERS<br>2198-E4150-ERS | | 13.0 (0.5) |

## Wire Selection and Preparation

Standard contacts accept wire size ranges of 16...22 AWG, 12...14 AWG, 18...10 AWG, and 4...6 AWG. The insulation diameter range, strip length, and crimp height are determined by the wire size and are shown below.

### Table 8 - Strip Length Specifications

| **Wire Size** (AWG) | **Strip Length (A)** mm (in.) | **Strip Length (B)** mm (in.) | **Typical Cable Conductors** |
|---|---|---|---|
| 20 | 7...9 (0.27...0.35) | 60 (2.36) | 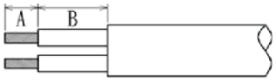  |
| 16 | | | |
| 12 | | | |
| 08 | 8...10 (0.31...0.39) | | |
| 06 | 16...18 (0.63...0.71) | | |
| 04 | | | |

### Table 9 - Wire Selection

| **Kit Cat. No.** | **Contact Size (pin number)** | **Applicable Wire Size** (1) | | **Outer Conductor Diameter** mm (in.) |
|---|---|---|---|---|
| | | IEC ($mm^2$) | AWG, max | |
| 2090-KTBK-MB-AA<br>2090-KTBK-MB-AE | #16 (2) | 1.25 | 20 | 1.95 (0.077) |
| 2090-KTFB-MF-AA<br>2090-KTFB-MF-AE | #16 (17) | 1.25 | 16 | |
| 2090-KTPC-MC-AA<br>2090-KTPC-MC-AE | #12 (3) | 4 | 12 | 2.95 (0.116) |
| | #16 (6) | 1.25 | 16 | 1.95 (0.077) |
| 2090-KTPC-MD-AA<br>2090-KTPC-MD-AE | #8 (3) | 6 | 10 | 3.5 (0.138) |
| | #12 (6) | 4 | 12 | 2.95 (0.116) |
| 2090-KTPC-ME-AA<br>2090-KTPC-ME-AE | #4 (4) | 22 | 4 | 5.19 (0.204) |

(1) Values represent the maximum wire size accepted by the connector pin/socket for each kit.

## Contact and Connector Assembly

The procedure for assembling the military-style connectors, regardless of pin number or size, is the same. Before performing this procedure, you must have all wires stripped.

Follow these steps to assemble a military-style connector.

1. Loosen (do not remove) the hardware that attaches the receptacle bushing to the receptacle.

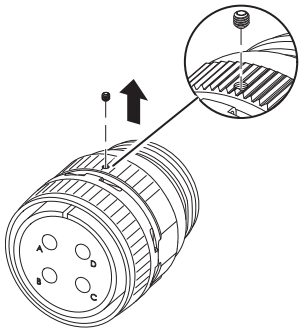

2. Unscrew the receptacle bushing.
3. Install heat shrink tubing (customer supplied) on each wire to be installed in the receptacle.
4. Insert the wires through the receptacle body, and then through the receptacle bushing.

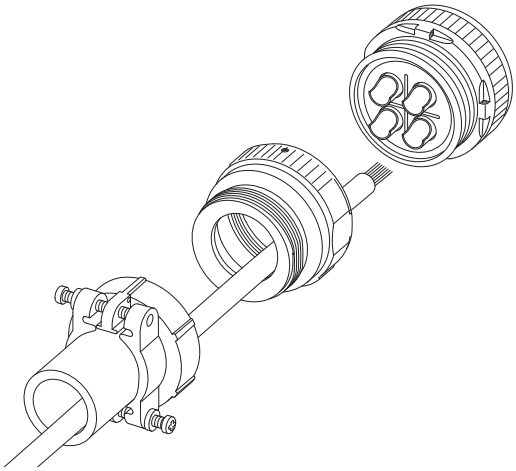

5. Rotate the wire contact and insert the wire as far as it goes.
6. Solder the wire to the termination point using the soldering specifications in Strip Length Specifications on page 11.
7. Rotate the contact so the soldering gap faces inward.

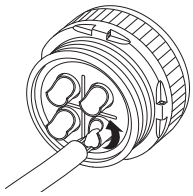

8. Repeat this process for the remaining wires.
9. Slide each heat shrink tube forward to cover the solder points and shrink.
10. Screw the receptacle bushing onto the receptacle.
11. Insert the hardware to secure the receptacle bushing to the receptacle.
12. Screw the receptacle body to the receptacle bushing.

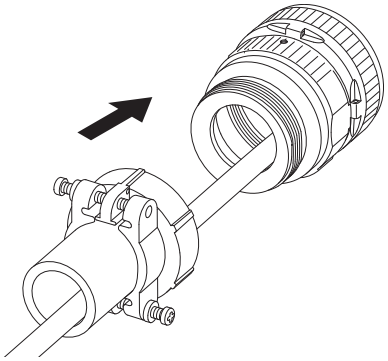

13. Secure the receptacle body with supplied hardware.

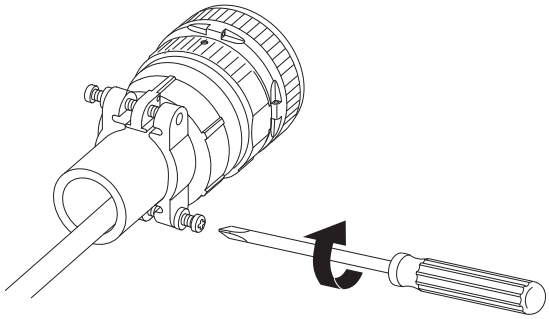

14. Repeat this process for the plug connection.

## Catalog Number Descriptions

| Catalog Number | Motors | Description |
|---|---|---|
| 2090-KTPC-MA-AA | TLP-A046, TLP-A/B070, TLP-A/B090, TLP-A100 | Kinetix TLP motor power connector kit (plug) |
| 2090-KTPC-MC-AA | TLP-A/B115, TLP-A/B145 | Kinetix TLP motor power connector kit (plug) |
| 2090-KTPC-MD-AA | TLP-A/B200 (4.5 kW and smaller) | Kinetix TLP motor power connector kit (plug) |
| 2090-KTPC-ME-AA | TLP-A/B200 (5.5 kW and 7.5 kW) and TLP-A/B235 | Kinetix TLP motor power connector kit (plug) |
| 2090-KTPC-MA-AE | TLP-A046, TLP-A/B070, TLP-A/B090, TLP-A100 | Kinetix TLP motor power extension connector kit (plug and socket) |
| 2090-KTPC-MC-AE | TLP-A/B115, TLP-A/B145 | Kinetix TLP motor power extension connector kit (plug and socket) |
| 2090-KTPC-MD-AE | TLP-A/B200 (4.5 kW and smaller) | Kinetix TLP motor power extension connector kit (plug and socket) |
| 2090-KTPC-ME-AE | TLP-A/B200 (5.5 kW and 7.5 kW) and TLP-A/B235 | Kinetix TLP motor power extension connector kit (plug and socket) |
| 2090-KTFB-MA-AA | TLP-A046, TLP-A/B070, TLP-A/B090, TLP-A100 | Kinetix TLP motor feedback connector kit (plug) |
| 2090-KTFB-MF-AA | TLP-A/B115, TLP-A/B145, TLP-A/B200, TLP-A/B235 | Kinetix TLP motor feedback connector kit (plug) |
| 2090-KTFB-MA-AE | TLP-A046, TLP-A/B070, TLP-A/B090, TLP-A100 | Kinetix TLP motor feedback extension connector kit (plug and socket) |
| 2090-KTFB-MF-AE | TLP-A/B115, TLP-A/B145, TLP-A/B200, TLP-A/B235 | Kinetix TLP motor feedback extension connector kit (plug and socket) |
| 2090-KTBK-MB-AA | TLP-A/B200 (5.5 kW and 7.5 kW) and TLP-A/B235 | Kinetix TLP motor brake connector kit (plug) |
| 2090-KTBK-MB-AE | TLP-A/B200 (5.5 kW and 7.5 kW) and TLP-A/B235 | Kinetix TLP motor brake extension connector kit (plug and socket) |

## Additional Resources

These documents contain additional information concerning related products from Rockwell Automation.

| Resource | Description |
|---|---|
| Kinetix Servo Drives Specifications Technical Data, publication KNX-TD003 | Provides product specifications for the Kinetix® Integrated Motion over EtherNet/IP™ network, Integrated Motion over Sercos interface, EtherNet/IP networking, and component servo drive families. |
| Kinetix Motion Accessories Specifications Technical Data, publication KNX-TD004 | Provides product specifications for 2090-Series motor and interface cables, low-profile connector kits, drive power components, and other servo drive accessory items. |
| 2090-Series Cables for Kinetix TLP Servo Motors Installation Instructions, publication 2090-IN046 | Provides information on how to install 2090-Series motor standard non-flex and continuous-flex power/brake and feedback cables. |
| Kinetix 5100 EtherNet/IP Indexing Servo Drives User Manual, publication 2198-UM004 | Information on how to install, configure, start, and troubleshoot your Kinetix 5100 servo drive system. |
| Kinetix 5300 Single-axis EtherNet/IP Servo Drives User Manual, publication 2198-UM005 | Information on how to install, configure, start, and troubleshoot your Kinetix 5300 servo drive system. |
| Industrial Automation Wiring and Grounding Guidelines, publication 1770-4.1 | Provides general guidelines for installing a Rockwell Automation industrial system. |
| Product Certifications website rok.auto/certifications | Provides declarations of conformity, certificates, and other certification details. |

You can view or download publications at rok.auto/literature.

# Rockwell Automation Support

Use these resources to access support information.

| | | |
|---|---|---|
| **Technical Support Center** | Find help with how-to videos, FAQs, chat, user forums, and product notification updates. | rok.auto/support |
| **Knowledgebase** | Access Knowledgebase articles. | rok.auto/knowledgebase |
| **Local Technical Support Phone Numbers** | Locate the telephone number for your country. | rok.auto/phonesupport |
| **Literature Library** | Find installation instructions, manuals, brochures, and technical data publications. | rok.auto/literature |
| **Product Compatibility and Download Center (PCDC)** | Download firmware, associated files (such as AOP, EDS, and DTM), and access product release notes. | rok.auto/pcdc |

# Documentation Feedback

Your comments help us serve your documentation needs better. If you have any suggestions on how to improve our content, complete the form at rok.auto/docfeedback.

# Waste Electrical and Electronic Equipment (WEEE)

At the end of life, this equipment should be collected separately from any unsorted municipal waste.

Rockwell Automation maintains current product environmental compliance information on its website at rok.auto/pec.

Your comments help us serve your documentation needs better. If you have any suggestions on how to improve our content, complete the form at rok.auto/docfeedback.
For technical support, visit rok.auto/support.

Rockwell Otomasyon Ticaret A.Ş. Kar Plaza İş Merkezi E Blok Kat:6 34752 İçerenköy, İstanbul, Tel: +90 (216) 5698400 EEE Yönetmeliğine Uygundur

Connect with us.

rockwellautomation.com — expanding **human possibility**™

AMERICAS: Rockwell Automation, 1201 South Second Street, Milwaukee, WI 53204-2496 USA, Tel: (1) 414.382.2000, Fax: (1) 414.382.4444
EUROPE/MIDDLE EAST/AFRICA: Rockwell Automation NV, Pegasus Park, De Kleetlaan 12a, 1831 Diegem, Belgium, Tel: (32) 2 663 0600, Fax: (32) 2 663 0640
ASIA PACIFIC: Rockwell Automation, Level 14, Core F, Cyberport 3, 100 Cyberport Road, Hong Kong, Tel: (852) 2887 4788, Fax: (852) 2508 1846

Allen-Bradley, expanding human possibility, Kinetix, and Rockwell Automation are trademarks of Rockwell Automation, Inc.
EtherNet/IP is a trademark of ODVA, Inc.

Publication 2090-IN048C-EN-P - February 2021 | Supersedes Publication 2090-IN048B-EN-P-April 2020
Copyright © 2021 Rockwell Automation, Inc. All rights reserved. Printed in the U.S.A.