SPARTAN

Ultimate Warrior
And
High Flow Ultimate Warrior

Service Manual

Record the Serial Number of your

Ultimate Warrior

and give the number to the
when ording parts.

Serial

Number .....

High Flow Warrior

and give the number to the factory
when ording parts.

Serial

Number .....

SPARTAN TOOL L.L.C.
8 0 0 . 4 3 5 . 3 8 6 6
www.spartantool.com

© 2016 Spartan Tool LLC

Ultimate & High Flow Warrior
Service Manual
Table of Contents

SECTION 1

Warrior Overview & Warnings

SECTION 2

Common Features of Ultimate & High Flow

Hi-Flow & Ultimate Final Assembly 6-18
Front Enclosure Assembly - 79958400.....19
Lift Up Door Assembly - 79961000..... 20-21
Hydraulic Tank Assembly - 79922200 22
Water/Antifreeze Supply - 79940100.....23
Drain Valve Assembly - 79959000.....24
Water Tank Fill Tee - 799858600 25
Fill Reel Assembly - 79940400 26
Wash Down Package - 73817300 27
Handgun Lance V-Nozzle - 77799800 27
Baseplate Assembly - 79958100 28-29
Recirculation Hose Assemblies 30
Tank Fill Assemby-79928600..... 31
Hydrant Fill Assembly - 79958000.....31
Lower Latch Assembly - 79957000 32
HP Reel Assembly - 79958300..... 33-35
Hose Guide Assembly - 79962700 36
Optional Remote Control 79947900.....37-40
Optionial Footage Counter-79975000.....31-42
Control Box Assembly - 79965800 43-44
Warrior Control Panel.....45
Wiring Schematic Terminal Block 46
Wiring Harness 79953300 47
Wiring Schematic 79944700..... 48-49
Remote Wiring Harness 79953400 50
Engine Wiring Harness 79953500.....51
Wiring Harness Control Box 79953600 52
Trailer Wiring Harness 7995420.....53

SECTION 2 --Continued--

Trailer Wiring Diagram - 79954200 54
Lubrication & Maintenance.....55-59
Pump Malfunction Char.....60
Diesel Engine Filters & Capacities 61

SECTION 3

Features Specific to High Flow Warrior

High-Flow Power Pack 79969000.. 63-69
High Flow Pump- 79965100.....70-71
Dump Valve Giant 22973CR - 79965605 72
Pump Parts List - 79965500 73
Pump Exploded View 74
High Flow Unloader - 79965600..... 75-76
High Flow Included & Optional Accessories.....77

SECTION 4

Features Specific to Ultimate Warrior

Power Pack 79925000..... 79-84
HP Pump Assembly 79940200.....85-86
Pump Parts List - 79802500 87
Pump Exploded View 88
Unloader - 79803700..... 89-90
Ultimate Warrior
Included & Optional Accessories.....91

SECTION 5

Important Informantion Common To Both

Tire Safety Information..... 92-96
Diesel Engine Emissions.....97
Warranty Information 98

Warrior Overview

Warnings

— Read the safety and operating instructions before using any Spartan Tool products. Drain and sewer cleaning can be dangerous if proper procedures are not followed and appropriate safety gear is not utilized. Read the Engine Owner's Manual for instruction and safety precautions on engine operation.

— Diesel is flammable and is explosive under certain conditions.

- Refuel in a well ventilated area with the engine stopped. Do not smoke or allow flames or sparks in the area where the engine is refueled or where diesel is stored.
- Do not overfill the fuel tank (there should be no fuel in the filler neck). After refueling, make sure the tank cap is closed properly and securely.

— Use Diesel STA-BIL Fuel Stabilizer during storage and during normal use to prevent fuel deterioration.

— Before starting unit, be sure to wear personal protective equipment such as safety goggles or face shield and protective clothing such as gloves, coveralls or raincoat, rubber boots with metatarsal guards, and hearing protection.

— Carbon monoxide exhaust and/or gasoline fumes from this equipment can create a hazardous atmosphere in confined spaces (which may include, but are not limited to, manholes, septic tanks, closed garages, or other areas which may not be properly ventilated). In particular, excess gasoline fumes can create an explosion hazard. Such hazardous atmospheres can cause death or severe injury. Do not operate this equipment in any confined space or area with inadequate ventilation. Operate this equipment only when located outdoors or in an open well-ventilated area.

— Insure the jet hose has been placed in the pipe (minimum of 6 feet suggested) before engaging the water pressure to prevent the hose from coming out of the pipe prematurely and causing injury. Always use the red leader hose provided.

— Always shut the water pressure off before pulling the hose out of the pipe. Mark the hose a minimum of 6 feet from the end to help insure the hose is not accidentally pulled out of the pipe while still under pressure. Shut off the water pressure when the hose mark is encountered. **Warning:** Portions of the system can still be under pressure even if the unit is not operating.

— Never point the wash gun at anyone while operating the unit. Injury may result.

— Drains and sewer can carry bacteria and other infectious micro-organisms or materials which can cause death or severe illness. Avoid exposing eyes, nose, mouth, ears, hands, and cuts and abrasions to waste water or other potentially infectious materials during drain and sewer cleaning operations. To further help protect against exposure to infectious materials, wash hands, arms, and other areas of the body, as needed, with hot soapy water. If necessary, flush mucous membranes with water. Also, disinfect potentially contaminated equipment by washing such surfaces with a hot soapy wash using a strong detergent.

"California Prop. 65: This product may contain an extremely small amount of lead in the coating. Lead is a material known to the State of California to cause cancer or reproductive toxicity."

— For any questions contact the company at the address shown below.

SPARTAN TOOL L.L.C.
1506 W. Division Street
Mendota, IL 61342
800.435.3866 ♦Fax 888.876.2371
www.spartantool.com

Introduction
Parts & Accessories

Spartan Tool will supply all parts or accessories you require as quickly as possible. In order to do so, we must have information from you, including machine serial number and part numbers.

Please record the serial number of your machine in the space provided below:

Spartan Ultimate or Hi-Flow Warrior

Serial No. _____

Using the part numbers, please contact your Spartan Territory Manager, the home office at (800)-435-3866, or online at www.spartantool.com.

Thank You.

Special Note

We at Spartan wish to help you maintain the safety, performance and appearance of your new Spartan Ultimate or Hi-Flow Warrior. This manual is provided to aid in ordering replacement parts. It is not intended to be used as an operating guide. See your operating manual for important safety precautions, operating instructions and troubleshooting aids.

Though much of your Warrior Jet is user serviceable, trained professional mechanics may be needed with pump, plumbing, engine, lights, hitch and axle experience.

— Contact Spartan Tool for all engine repair or troubleshooting.

— Contact Spartan Tool or consult the Pump Repair Manual for all pump repair or troubleshooting.

— All plumbing repairs should use Spartan parts. The high pressure plumbing has been designed for pressures greater than 4000 PSI. Substituting parts is dangerous and voids Spartan warranties. Use standard pipe sealing compound or “Teflon”® tape to seal all joints except swivel joints and hose nozzles (o-rings, seals, and tapered seat designs do not require sealing materials

Section 2
Common Features to both versions
Table of Contents

COMMON PARTS & ACCESSORIES SECTION

Hi-Flow & Ultimate Final Assembly 6-18
Front Enclosure Assembly - 79958400.....19
Lift Up Door Assembly - 79961000..... 20-21
Hydraulic Tank Assembly - 79922200 22
Water/Antifreeze Supply - 79940100.....23
Drain Valve Assembly - 79959000.....24
Water Tank Fill Tee - 799858600.....25
Fill Reel Assembly - 79940400.....26
Wash Down Package - 73817300.....27
Handgun Lance V-Nozzle - 77799800 27
Baseplate Assembly - 79958100..... 28-29
Recirculation Hose Assemblies 30
Tank Fill Assemby-79928600.....31
Hydrant Fill Assembly - 79958000.....31
Lower Latch Assembly - 79957000 32
HP Reel Assembly - 79958300..... 33-35
Hose Guide Assembly - 79962700.....36
Optional Remote Control 79947900.....37-40
Optionial Footage Counter-79975000.....37-43
Control Box Assembly - 79965800 43-44
Warrior Control Panel.....45
Wiring Schematic Terminal Block 46
Wiring Harness 79953300.....47
Wiring Schematic 79944700..... 48-49
Remote Wiring Harness 79953400 50
Engine Wiring Harness 79953500.....51
Wiring Harness Control Box 79953600 52
Trailer Wiring Harness 7995420.....53
Trailer Wiring Diagram - 79954200 54
Lubrication & Maintenance.....55-59
Pump Malfunction Char.....60
Diesel Engine Filters & Capacities 61

Hi-Flow & Ultimate Warrior
Assembly 799300T4 & 799400T4

ITEM	QTY	PART NUMBER	DESCRIPTION
1	4	00113500	SCREW, HEX HEAD CAP 1/4-20 X 1/2
2	8	00113600	SCREW, HEX HD CAP 1/4-20 X 5/8
3	15	00115100	SCREW, HX HD CAP 5/16-18 X 1"
4	72	00162700	WASHER, FLAT 3/8
5	12	00165400	WASHER, LOCK SPLIT 1/4
6	26	00165800	WASHER, LOCK SPLIT 3/8
7	2	02820700	NUT, HEAVY HEX JAM 5/16-18
8	5	02821100	NUT, HEX 3/8-24
9	14	02821200	NUT, NYLOCK JAM 1/4-20
10	12	02825100	WASHER, FLAT 1/4 USS
11	27	02899200	WASHER, FLAT 5/16 USS
12	6	02934100	NUT, HEX 3/8-16
13	18	03004100	NUT, STD HEX 5/16-18
14	18	03366300	WASHER, FLAT 3/8 SAE
15	4	03850100	NUT, HEX KEP 10-32
16	4	04723100	SCREW, MACHINE 10-32 X 5/8"
17	8	521012-04	SCREW, HEX HD 1/4-20 X 1-1/2
18	6	522132-00	NUT, NYLON LOCKING 3/8-16
19	10	72715100	CLAMP, HOSE 1-1/8 I.D. RUBBER COATED
20	1	73817300	WASH DOWN ACCESSORY PACKAGE
21	1	73817400	DECAL, MADE IN USA
22	19	73821200	NUT, NYLON LOCKING 1/4-20
23	134	73826900	WASHER, FLAT 1/2 USS HIGH STRENGTH
24	1	73827600	BUSHING, REDUCER (MODIFIED)
25	1	73827800	BULKHEAD FITTING W/PVC CAP
26	1	73829700	U-BOLT, SQUARE 2" X 2-5/8" (3/8-16)
27	2	73830200	BEARING, FLANGED BRONZE 7/8 SHAFT
28	2	73830400	WASHER, FLAT 7/8 SAE
29	9	73831200	CLAMP, HOSE 1-1/16" - 2" #24
30	1	75845700	CASTER, JACK
31	1	75851406	STRIKER PLATE, TRANSIT LOCK
32	8	75852401	WASHER, .281 ID X 1.5 OD BLACK
33	79	75852700	WASHER, 3/8" ID USS GRD 9
34	2	75860900	SOLDIER ENCLOSURE AEROLATCH
35	4	77710200	HOSE 1-1/4 X 4 SPIRAL SM
36	17	77738100	SCREW, CAP HX HD 3/8-16 X 1
37	8	77738300	SCREW,CAP HEX HD 3/8-16 X 3/4
38	1	77742600	BUSHING, REDUCER 3/4 X 1/2
39	8	77743400	WASHER, LOCK SPLIT 5/16
40	2	77746000	CLAMP, HOSE 7/32 - 5/8 S.S.
41	26	77748000	NUT, STOVER LOCK 3/8-16 UNC
42	2	77748200	HOSE 1-1/2 ID X 4 SPIRAL
43	4	77754900	WASHER, ROBO 1/2"
44	6	77755000	WASHER, ROBO 3/8"
45	6	77759900	SCREW, CAP HX 3/8-16 X 1-1/4
46	18	77760000	SCREW HEX HD CAP 3/8-16 X 1-1/2

ITEM	QTY	PART NUMBER	DESCRIPTION
47	6	77766000	Nut, Jam 3/8-24
48	1	77770800	NIPPLE, HEX 1/2 NPT
49	6.0 FT	77785900	HOSE, PUSH LOK 3/4
50	1	77800600	ASSY, HOSE GUARD 2"
51	4	79804200	TIRE,225/75R15
52	1	79811400	ELBOW, 90 DEGREE STREET 1-1/2 POLY
53	1	79811500	VALVE, BALL 1-1/4FNPT X 1-1/4F
54	1	79812000	HOSE BARB, 1-1/4 POLYPROPYLENE
55	1	79812100	BARB, HOSE 1-1/2 MPT X 1-1/2 PO
56	5	79815700	ROD END, BALL JOINT 3/8-24
57	2	79818600	HOSE BARB, 1-1/4 POLYPROPYLENE
58	1	79824900	HOSE, LEADER 1/2" X 15' RED
59	1	79829900	SCREW, HX HD CAP 1/2-13 X 2
60	1	79831400	SCREW, SOCKET HD 1/4-20 X 2
62	2.0 FT	79849800	HOSE FUEL 5/16 ID
63	3.5 FT	79849900	HOSE FUEL 3/16 ID
64	4	79854500	NUT, HEX LOCK 5/8-11
65	2	79858200	SCREW, HEX HD 3/8-16 X 2-1/2
66	1	79864400	STOP LINK ARM 798
67	1	79865900	ROD END, FRONT CLUTCH LEVER
68	8	79868500	CLAMP, HOSE 2" VINYL COATED
69	1	79873500	ASSY, HOSE ANTI-TURN AROUND
70	2	79900200	AXLE, SINGLE W/ELECTRIC BRAKES
71	1	79900600	ASSEMBLY, 7 POLE QUICK RELEASE 6'
72	1	79901800	WELDMENT, HITCH
73	1	79904200	BREAKAWAY KIT, WITH CHARGER
74	3	79904478	EL 90D 1/2NPT-BARB BRASS
75	3.0 FT	79904495	HOSE, 1/2" CLEAR
76	1	79904930	COUPLING, HEX 1/2NPT STEEL
77	2	79909900	SCREW, SOCKET HD 3/8-16 X 1-3/4
78	1	79920050	DECAL, CANTILEVERED REEL - WARRIOR
79	1	79920100	WELDMENT, FRAME 1 OR 2 AXLE
80	30	79920140	HEX HD BOLT 1/2-13 X 4-1/2 GR8
81	55	79920141	NUT, HX GR8 1/2-13 STOVER
82	10	79920145	HEX HD BOLT 1/2-13 X 1-1/2 GR8
83	26	79920150	HEX HD BOLT 3/8-16 X 1-1/2 GR8
84	38	79920151	HEX NUT, 3/8-16 GRADE 8
85	6	79920152	HEX HD BOLT 3/8-16 X 3 GR8
86	13	79920153	HEX HD BOLT 3/8-16 X 4-1/2 GR8
87	4	79920160	SCREW, HEX GR8 5/8-18 X 2
88	8	79920161	WASHER, FLAT 5/8 GR8
89	4	79920170	SCREW, HEX GR8 5/8-18 X 5
90	1	79920191	PLATE, JACKSTAND BRACE
91	1	79920236	DECAL, CLUTCH ON-OFF
92	1	79920238	CROSS TIE, CLUTCH LINK
93	1	79920239	WELDMENT, TOP CLUTCH PIVOT

Hi-Flow & Ultimate Warrior
Assembly 799300T4 & 799400T4

ITEM	QTY	PART NUMBER	DESCRIPTION
94	1	79920271	TIE ROD, SHORT
95	1	79920273	PLATE, BEARING MOUNT
96	6	79920274	PILLOW BLOCK !" STEEL
97	1	79920282	WELDMENT, REAR CLUTCH SHAFT
98	1	79920283	WELDMENT, FRONT CLUTCH SHAFT
99	1	79920289	HANDLE, CLUTCH LEVER
100	1	79920298	SHAFT, SHORT CLUTCH
101	2	79920330	CLAMP, EXHAUST 2-1/2
102	1	79920500	WELDMENT, REAR TRANSFORMER
103	2	79920625	BRACKET, LOWER GAS STRUT
104	2	79920628	BALL STUD, GAS STRUT
105	2	79920630	SPARTAN LOGO
106	1	79920700	ASSY, REAR ENCLOSURE
107	3	79920720	BREAKLIGHT, OVAL LAMP
108	2	79920770	ANGLE, REAR ENCLS FRAME MOUNTS
109	1	79921330	HEAT SHIELD
110	1	79921400	TANK, ANTI-FREEZE (2008)
111	1	79921500	TANK, DIESEL FUEL 2008
112	1	79921510	REDUCING COUPLING 3/8 X 1/4
113	2	79921700	BAFFLE-INSERT
114	4	79921710	CLAMP, TANK FILL PIPE
115	1	79921800	WELDMENT, FRONT CROSS BRACE
116	1	79921827	ANGLE,LOWER BEARING
117	1	79921829	ARM ASSY, CLUTCH
118	2	79922000	WELDMENT, HEAT SHIELD
119	1	79922200	ASSY-HYD RESERVOIR
120	1	79922400	WELDMENT, REAR TANK HOLD DOWN
121	1	79922500	WELDMENT, CURB SIDE FRONT
122	1	79922600	WELDMENT, REAR CURB SIDE HOLD DOWN
123	1	79922710	PLATE, HP REEL SUPPORT BASE
124	1	79922800	WELDMENT, HP REEL CROSS SUPPORT
126	1	79923820	ANGLE, STREET SIDE T4
127	1	79923830	WELDMENT, UPPER BEARING BRACKET T4
128	1	79924900	WELDMENT, REAR CROSS MEMBER t4
129	1	79927500	TANK, 300 GAL WATER WARRIOR
130	1	79927600	TANK, 300 GAL WATER WARRIOR
131	1	79928700	WELDMENT, STREET SIDE FRONT tier 4
132	1	79931100	WELDMENT, 90 DEGREE PIVOT FRAME
133	1	79931300	WELDMENT, PIVOT PIN 90 DEGREE
134	2	79931330	WELDMENT, PIVOT PIN 180 DEGREES
135	1	79931380	1-1/4" POLY STREET ELBOW 45 DEG
136	1	79931400	BRACKET, ANTI-FREEZE VALVE
137	1	79931700	BRACKET WATER FILTER
138	1	79932800	WELDMENT, CLUTCH LINK ULTIMATE
139	2	79936605	WELDMT,S-SIDE ULT-WARRIOR AXLE MOUNT
140	2	79936705	WELDMT, C-SIDE ULT-WARRIOR AXLE MOUNT

ITEM	QTY	PART NUMBER	DESCRIPTION
141	1	79940100	ASSY, WATER SUPPLY/ANTIFRZ
142	1	79940470	ASSY, FILL REEL WARRIOR T4
143	2	79942000	WELDMENT, STRETCH FRAME
144	1	79942200	ASSY STRETCH FRAME FIBRGLAS
145	5	79942300	PLATE, FIBERGLASS FRAME MOUNT
146	6	79942400	BUMPER, VIBRATION DAMPENER
147	1	79942540	FORMED ANGLE LOWER ST SIDE
148	1	79942970	CURBSIDE REAR COVER T4
149	1	79942980	STREETSIDE REAR COVER T4
150	2	79943000	WELDMENT, BOLT PAIR
151	1	79944100	HOSE, GARDEN 5/8 X 100'
152	2	79945815	LIGHT, SIDE MARKER RED P&P
153	2	79945830	REFLECTOR, RED
154	4	79945860	SCREW, 8-32x1-1/4 FLT HD ZNC
155	1	79947400	SPRING HANGER - BLACK
156	1	79947640	BRACKET, 7PIN RECEPTICLE
157	1	79948060	HOSE ASSY, HYD SUCTION WARRIOR
158	1	79948075	HOSE ASSY, HYD VALVE OUT (ULT)
159	1	79948095	HOSE ASSY, HYD PUMP ULT
160	1	79948700	RECIRC HOSE ASSY FILL REEL
161	2	79948800	RECIRC HOSE ASSY FILL SHUTOFF
162	2	79949000	RECIRC HOSE ASSY WATER TANK
163	2	79949105	RECIRC HOSE ASSY ANTIFRZ ULT
164	2	79949300	FLANGE GASKET 3/4" PIPE
165	2	79949400	HOSE ASSY LEGACY FILL REEL
166	1	79950000	HOSE, HP REEL INLET HOSE (VIS)
167	1	79950205	HOSE, SUPPLY PUMP-REEL (ULT)
168	20.5 FT	79950410	CLEAR VIEW PVC HOSE
170	1	79950500	ELBOW, 12 MALE 37DEG 3/4NPT
171	1	79950700	BLOCK HP RESTING W/STEP
172	1	79950800	BLOCK, HP REEL STOPPER
173	1	79950810	BUMPER, 1-1/2" DIA X 3/4" HG
174	1	79950820	SCREW,5/16-18X1 SCK CAP
175	1	79952100	DECAL, VIN NUMBER
176	1	79952300	DECAL, WHEEL & LUG NUTS
177	1	79952400	DECAL, SAFETY CHAINS
178	1	79952600	DECAL, ELECTRIC BRAKES
179	1	79952700	DECAL, NATM COMPLIANCE
180	1	79953600	ASSY, CONTROL BOX WAR T4
181	1	79953800	HARNESS BUNDLE, 2016 WARRIOR T4
182	1	79953820	STROBE BEACON ASSY - 2016
183	1	79953830	SWITCH ASSY, LIQUID LEVEL 2016
184	1	79953850	SENDER, FUEL LEVEL ASSY - 2016
185	1	79953860	SENDER, WATER LEVEL ASSY - 2016
186	1	79953890	SENDER, ANTIFREEZE LEVEL ASSY - 2016
187	1	79953900	CLAMP, T4 WIRING - REEL 2016

Hi-Flow & Ultimate Warrior Assembly 799300T4 & 799400T4

ITEM	QTY	PART NUMBER	DESCRIPTION
188	1	79953910	PLATE, WARRIOR REEL CABLE KEEP
189	1	79953920	ELECTRIC PULSATOR ASSY - HIFLO 2016
190	1	79954200	WIRE HARNESS WARRIOR LIGHTS
191	1	79954620	DECAL, CLUTCH ON-OFF
192	1	79957000	LATCH ASSEMBLY 90 D LOWER INDEX
193	1	79957800	ASSY, MEDIUM FIELD BOX
194	1	79958000	HYDRANT FILL ASSY WARRIOR
195	1	79958300	HP REEL ASSEMBLY (WARRIOR)
196	1	79958400	ASSY, FRONT ENCLOSURE
197	1	79958600	BASEPLATE ASSEMBLY T4 (WARRIOR)
198	1	79959000	DRAIN VALVE ASSEMBLY (WARRIOR)
199	2	79960000	CHAIN, SAFETY
200	1	79960200	ANGLE, REAR SUPPORT ULT. WAR
201	1	79961000	DOOR, LIFT UP FBRGLS ASSEMBLY
202	2	79961030	PLATE, HINGE LIFT UP FBRGLS
203	4	79961060	BALL SOCKET 10MM-M6 THRD
204	5	79961070	BALL STUD 10MM W/ 5/16-18 THD
205	2	79961100	BRACKET, STRUT SUPPORT- DOOR
206	2	79961130	FLANGE BEARING 3/8" SHAFT BRN
207	2	79961140	SCREW, SHLDR 3/8" DIA X 3/4 LG
208	2	79961190	GAS STRUT #130 18.75" EXTEND
209	4	79961200	WASHER, NEOPRENE .23ID X .50 OD
210	1	79962020	BRACE, OIL PAN PREVENTER
211	2	79962300	CLAMP, INSULATED 7/8 ID
212	1	79962310	CLAMP, INSULATED 1-1/4 ID
213	2	79962320	HOSE, HP REEL PROTECTIVE COVER
214	1	79963200	DECAL, ULTIMATE TIRE & LOAD PRINT
215	1	7996400P	HP HOSE ASSY 5/8"X500 FT (High Flow version)
215	1	79803400	HP HOSE ASSY 1/2" X 500 FT (Ultimate version)
216	1	79966000	NOZZLE, CLOSED HIGH FLOW
217	1	79966100	NOZZLE, OPEN HIGH FLOW
218	2.0 FT	79966200	FLEX HEAT SHRINK TUBING
219	1	79966300	ADJ, COUPLER-2-5/16" 12000 LB
220	1	79966330	STRIKER PLATE, REAR DOOR LATCH
221	1	79967200	WLDMNT, ULT WAR BP SUPPORT
222	1	79969000	ASSY, POWER PACK WARRIOR HIGH FLOW T4
222	1	79925000	ASSY, POWER PACK TIER 4 (Ultimate version)
223	1	79984190	RUBBER CONNECTOR 4"
224	8	82020100	SCREW, 1/4-20 X 1 BUTTON HEAD
546	1	79960500	JACK, STAND LARGE JET
547	1	79807300	JACK STAND-FOOT
548	4	79936900	CAP, EZ LUBE (BEARING BUDDY) #11 TORFLEX
549	1	79985860	HYDRANT FILL ASSY (2010)
550	1	79921410	CAP, ANTI-FREEZE TANK
551	1	79864300	CAP, FUEL TANK

Hi-Flow & Ultimate Warrior
Assembly 799300T4 & 799400T4

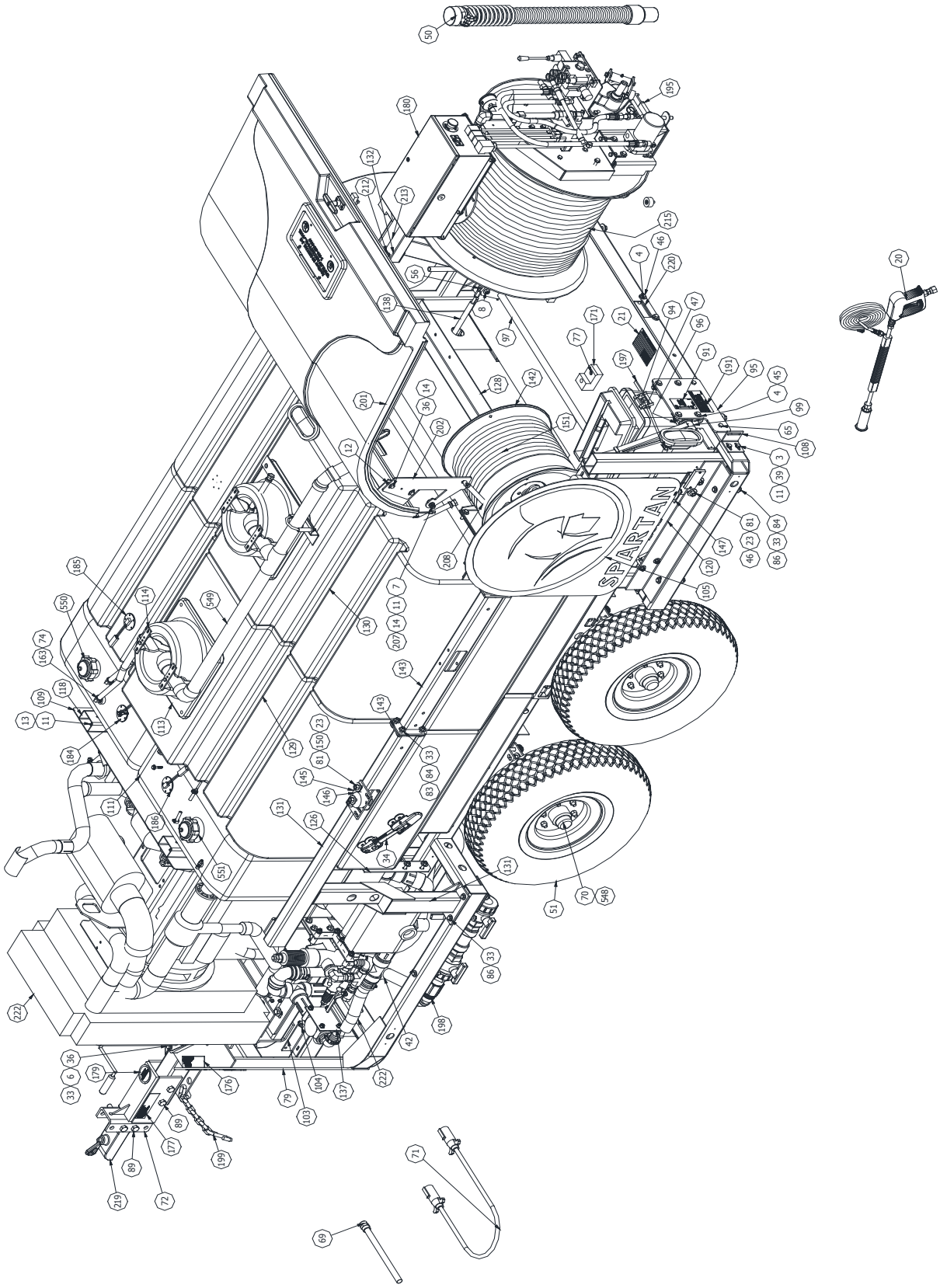

Hi-Flow & Ultimate Warrior
Assembly 799300T4 & 799400T4

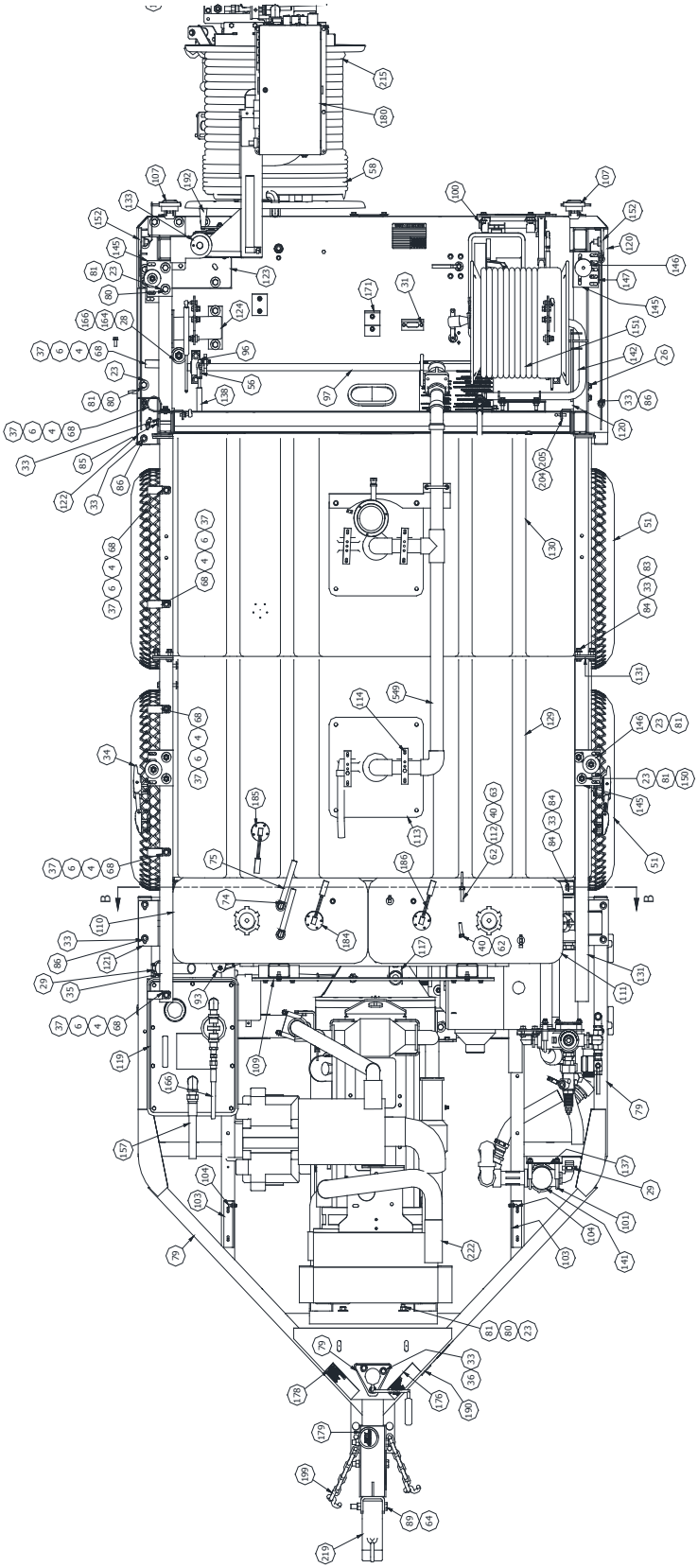

Hi-Flow & Ultimate Warrior
Assembly 799300T4 & 799400T4

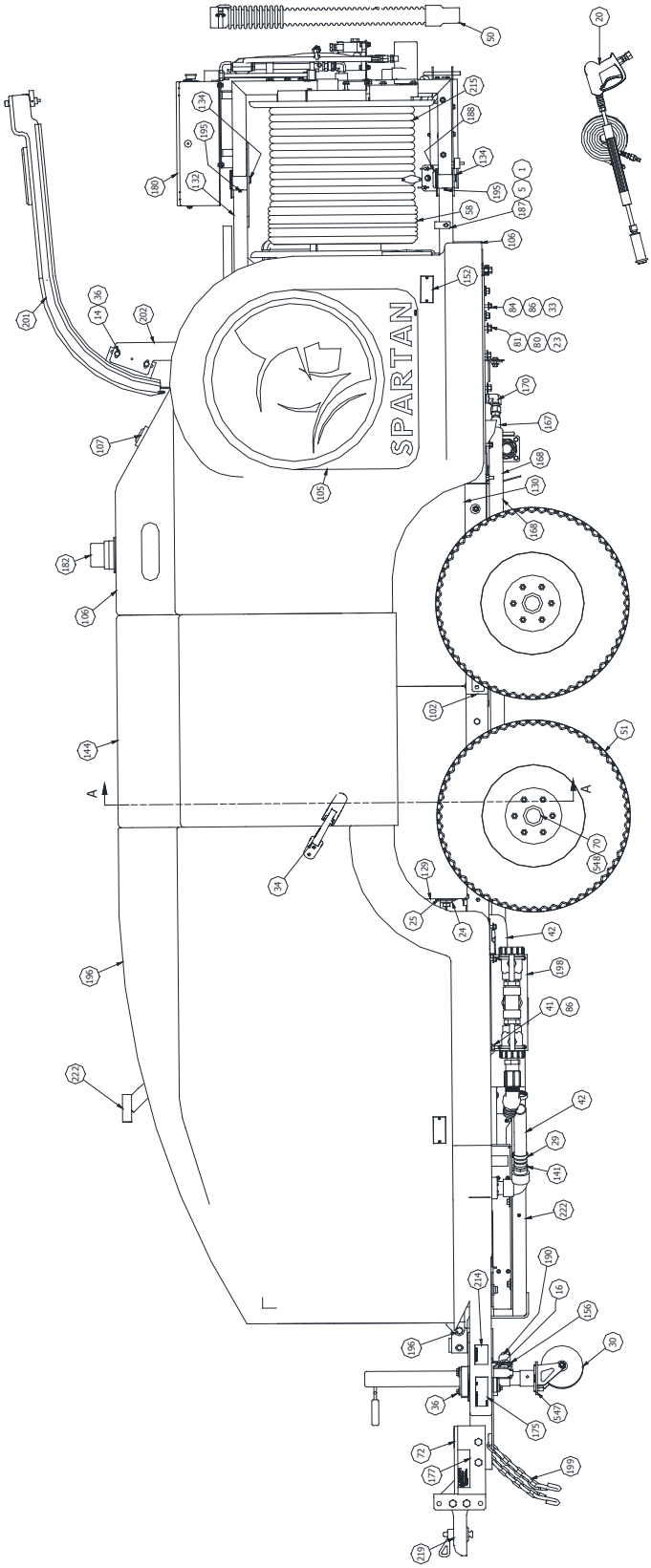

Hi-Flow & Ultimate Warrior
Assembly 799300T4 & 799400T4

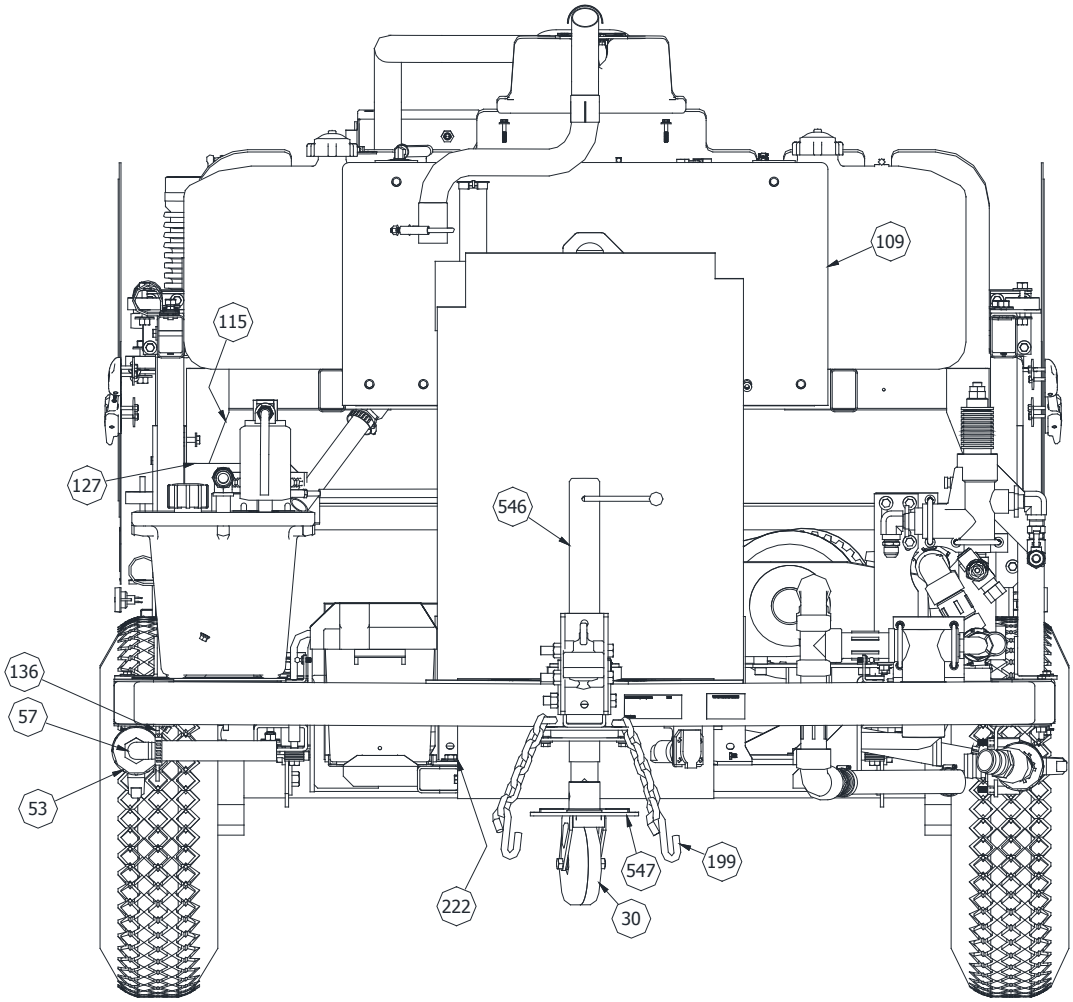

Hi-Flow & Ultimate Warrior Assembly 799300T4 & 799400T4

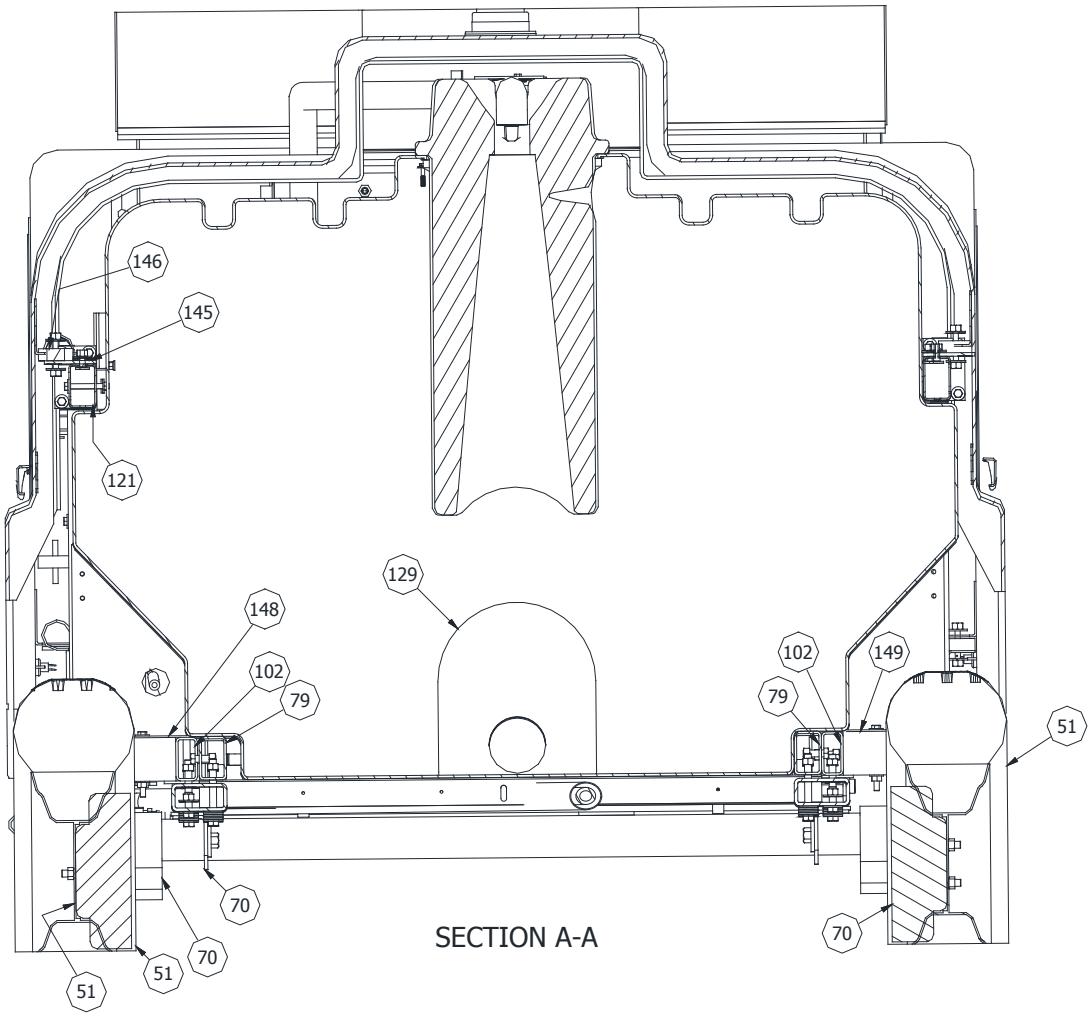

Hi-Flow & Ultimate Warrior
Assembly 799300T4 & 799400T4

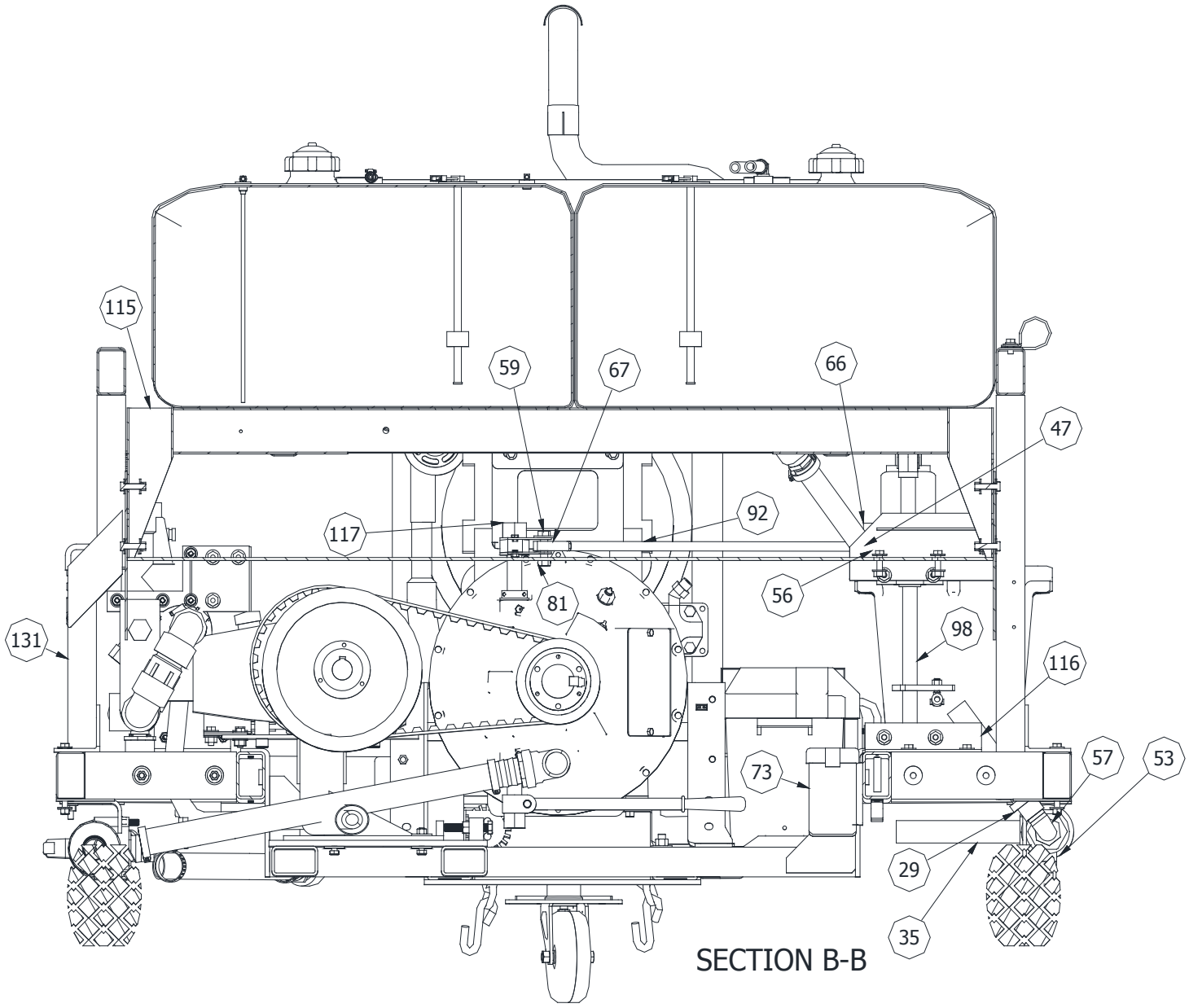

Hi-Flow & Ultimate Warrior
Assembly 799300T4 & 799400T4

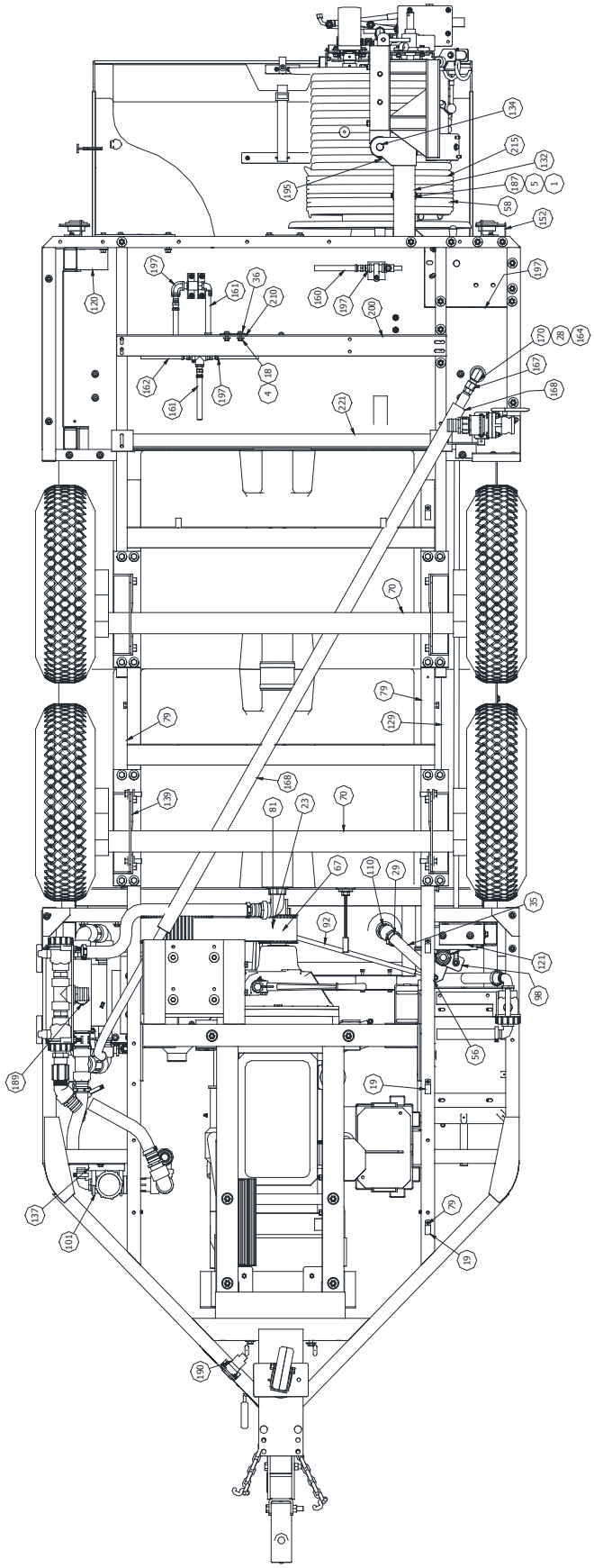

Hi-Flow & Ultimate Warrior Assembly 799300T4 & 799400T4

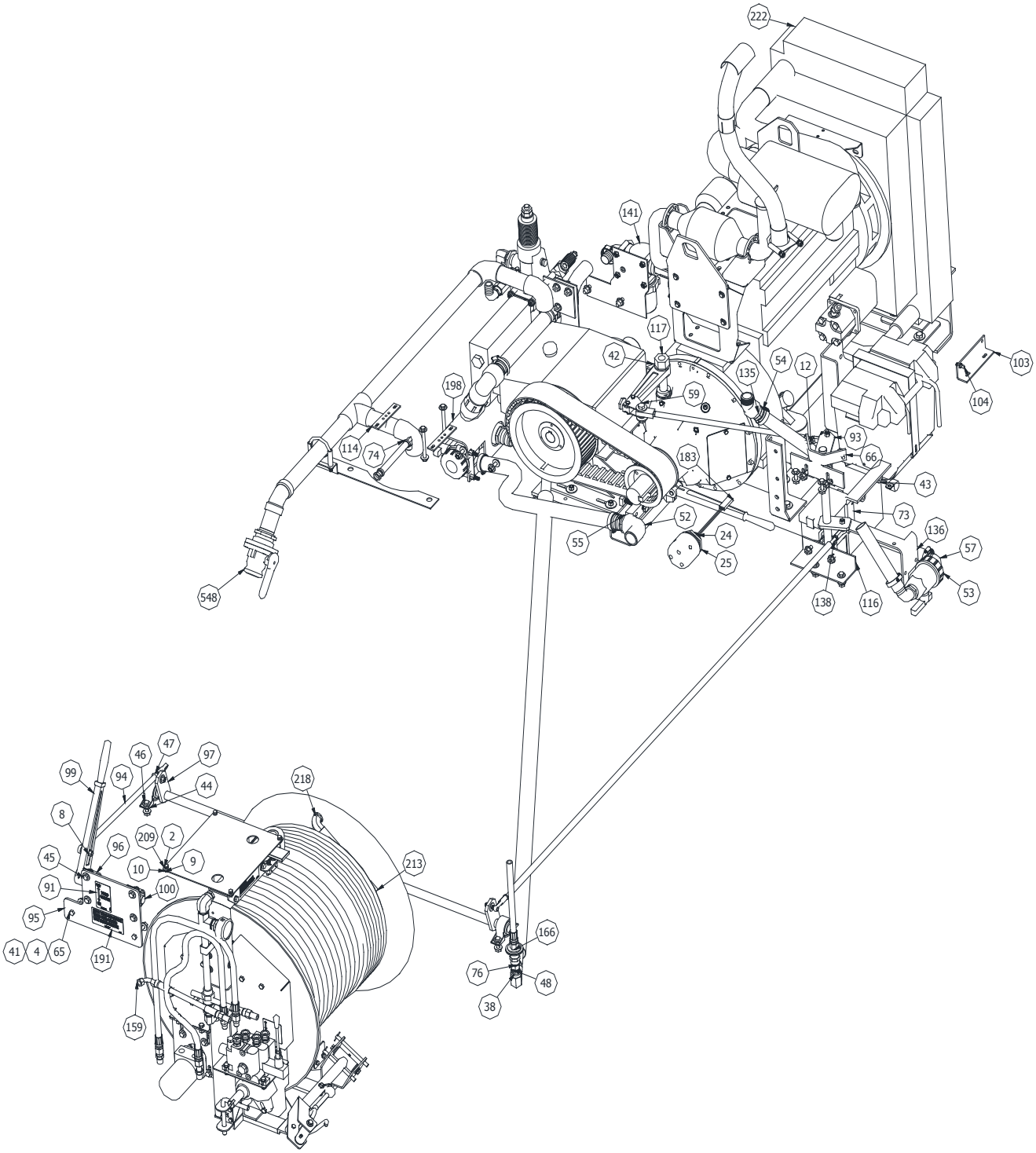

Hi-Flow & Ultimate Warrior
Assembly 799300T4 & 799400T4

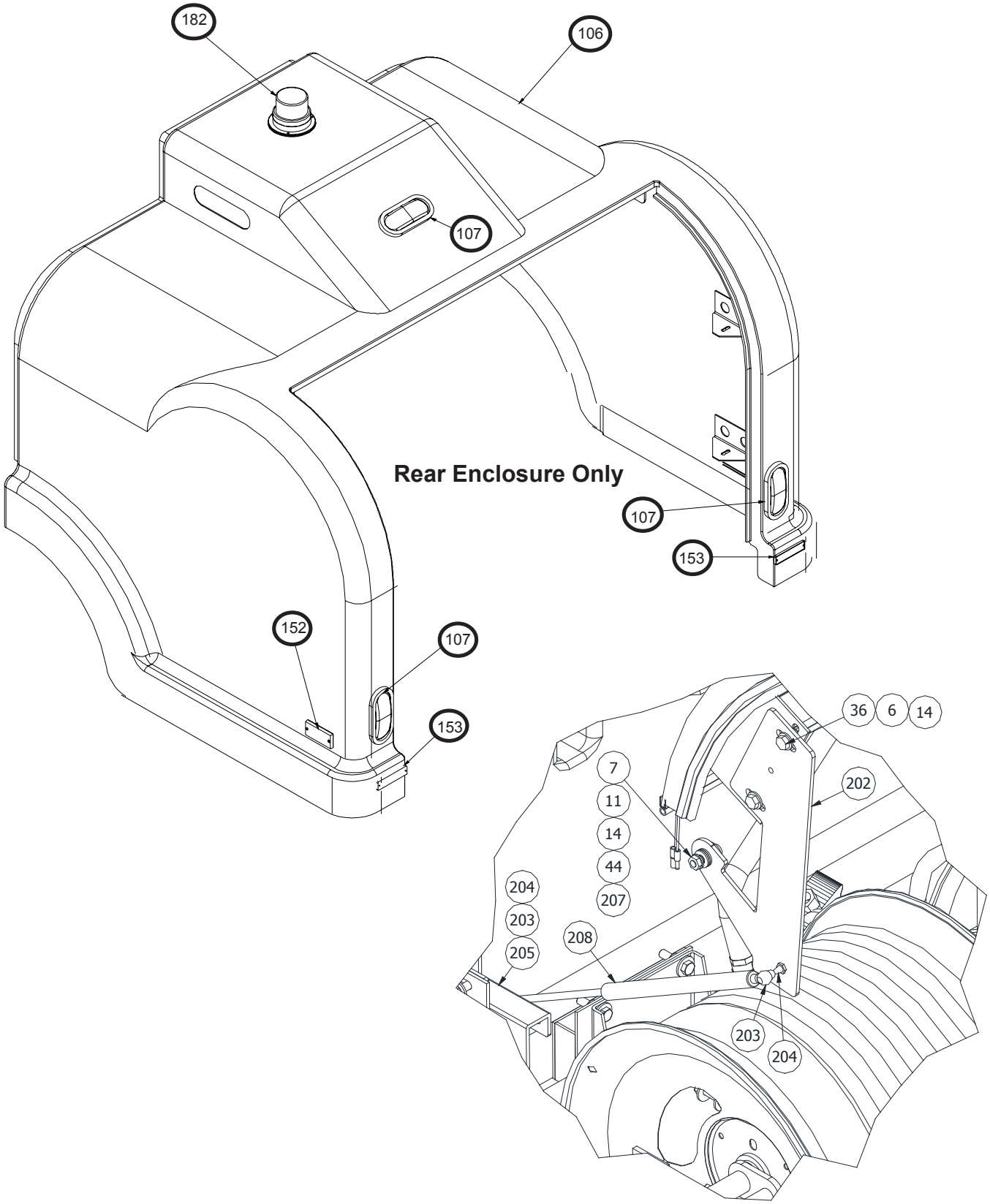

Front Enclosure Assembly - 79958400

ITEM #	QTY	PART NO.	DESCRIPTION
1	6	00113901	SCREW, HX HD CAP 1/4-20 X 1 ZN
2	4	00162400	WASHER, FLAT 3/16
3	4	00162700	WASHER, FLAT 3/8
4	2	02820700	NUT, HEAVY HEX JAM 5/16-18
5	12	02825100	WASHER, FLAT 1/4 USS
6	4	03312001	NUT, HEX KEP 8-32 ZINC PLATED
7	6	73821200	NUT, NYLON LOCKING 1/4-20
8	10FT	75841010	VINYL EDGE TRIM BLACK
9	4	75853710	10mm GAS STRUT SOCKET
10	2	77760000	SCREW HEX HD CAP 3/8-16 X 1-1/2
11	2	79858000	SCREW, HEX HD CAP 1/2-13 X 1-1/2
12	2	79920141	NUT, 1/2-13 HX GR8 CENTER LOCK
13	1	79920600	ASSY, FRONT ENCLOSURE
14	2	79920623	GAS SPRING, M8 THRD 125#
15	4	79920628	BALL STUD, GAS STRUT
16	1	79920658	HINGE BASE FRONT STREET
17	1	79920659	HINGE BASE FRONT CURB
18	2	79920669	HINGE VERTICAL TAB
19	7FT	79920750	EDGE TRIM, BLACK RUBBER 1/4"
20	2	79941620	PLATE, UPPER GAS STRUT ANGLED
21	6	79942600	WASHER, FLAT SAE 1/2" - .074
22	2	79943300	NUT, HEX JAM 3/8-16 ZNC PLT
23	2	79945850	LIGHT, SIDE MARKER AMBER
24	4	79945860	SCREW, 8-32x1-1/4 FLT HD ZNC

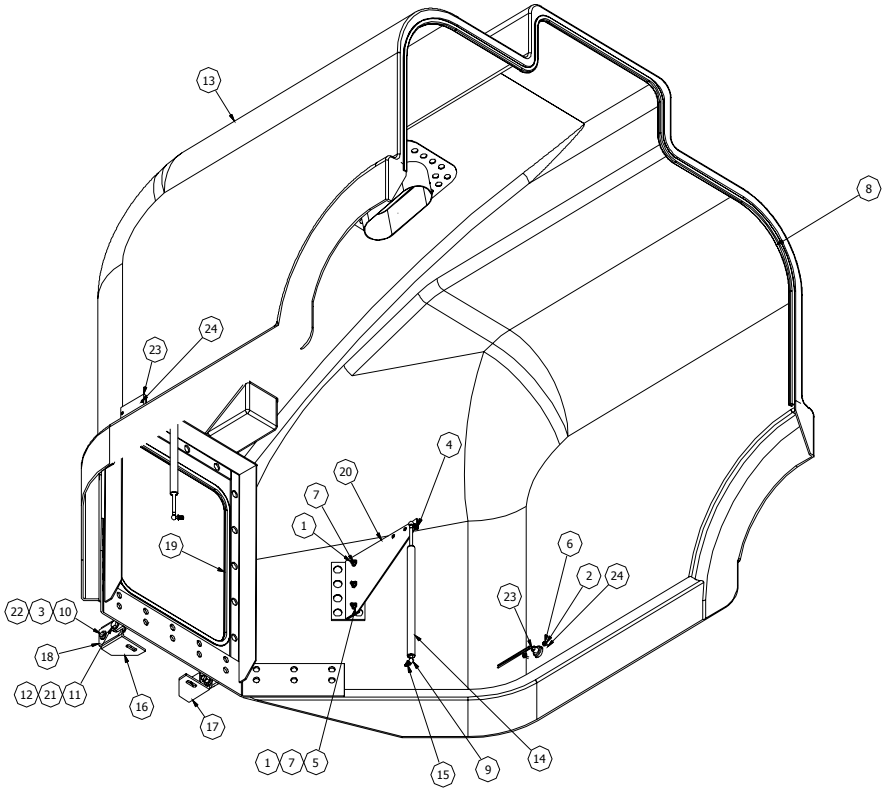

Lift Up Door Assembly - 79961000

ITEM #	QTY	PART NO.	DESCRIPTION
1	6	00162400	WASHER, FLAT 3/16
2	6	00165300	SPLIT LOCKWASHER #10 ZINC PTLD
3	4	03850100	NUT, HEX KEP 10-32 ZINC PLATED
4	10 ft	44222400	WIRE, HOOK-UP 16 AWG - BLACK
5	4	44294600	SCREW, MACHINE 10-32X 1-1/4
6	1	44298500	JETTER LICENSE PLATE INSERT
7	1	77722100	FRAME, LIGHTED LICENSE
8	10 ft	77733100	WIRE, 16 AWG - RED STRANDED CU
10	2	77742400	NYLOCK LOCK NUT 10-24
11	3	77751600	DISCONNECT, FEMALE BULLET
12	3	77751700	DISCONNECT, MALE BULLET
13	1	79961010	FIBRGLSS DOOR, LIFT UP (BRKTS)
14	1	79961080	NYLON WEBBING, 1-1/2" WIDE
17	1	79961120	WEBBING FEED THRU PLATE, 1-1/2
18	1	79961300	WELDMENT, PULL DOWN STRAP
19	17.6 ft	79961150	EDGE TRIM, RBBR SEAL-TOP 3/8
21	1	77735301	ADJUSTABLE LATCH 2-1/2"
22	1	79961110	T-HANDLE, KEY LATCH-CCW CHRM
23	1	79966340	SHAFT COLLAR, 7/16" BORE
24	2	79961180	SCREW, FLT HD 10-24 X 1-1/4"
25	1	79970100	WELDMENT, DOOR LATCH SUPPORT
	8 ft	73826800	WIRE-LOOM, BLACK PLASTIC 3/8"

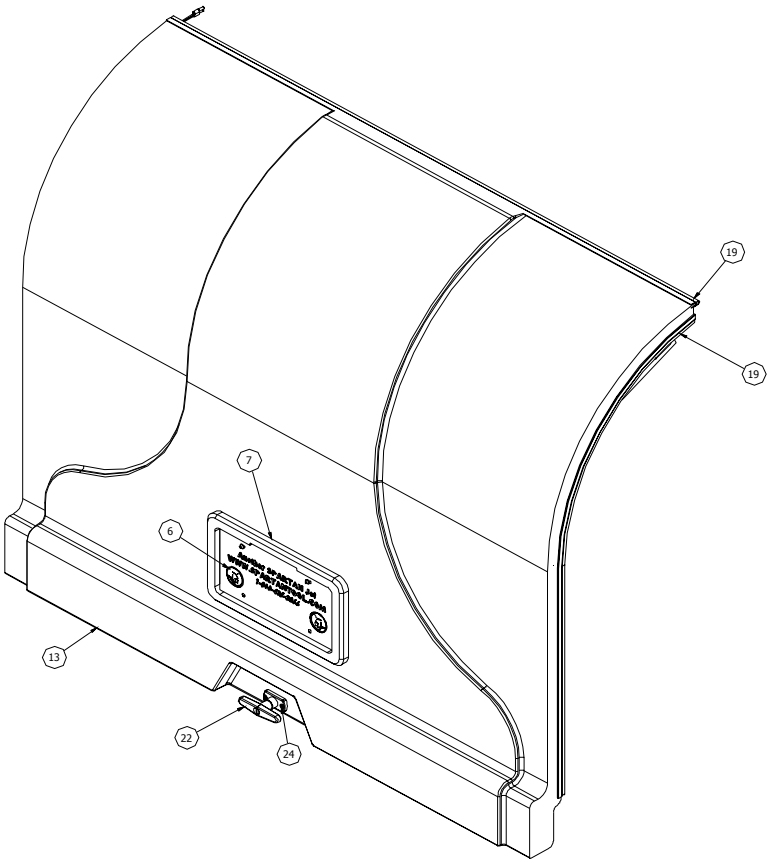

Lift Up Door Assembly - 79961000

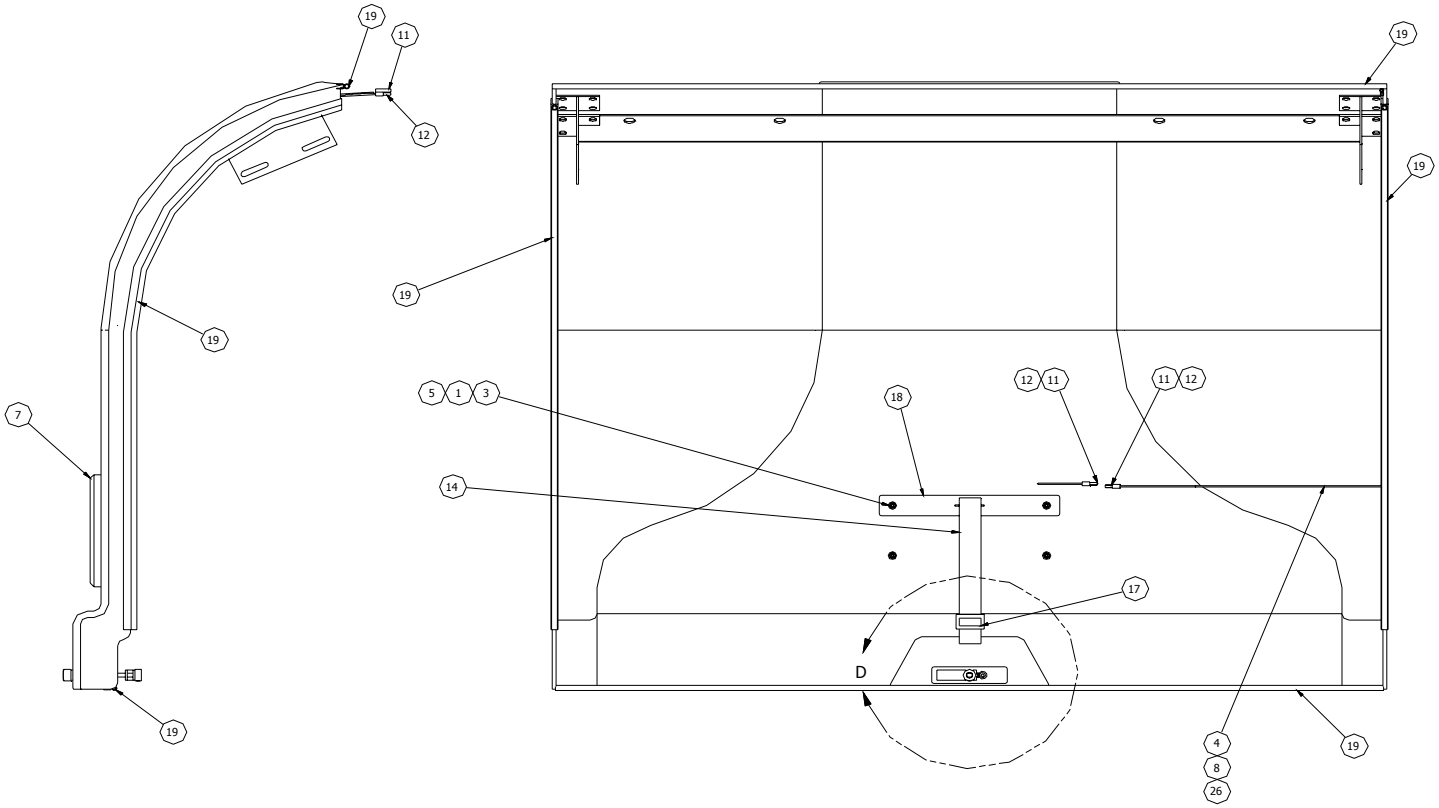

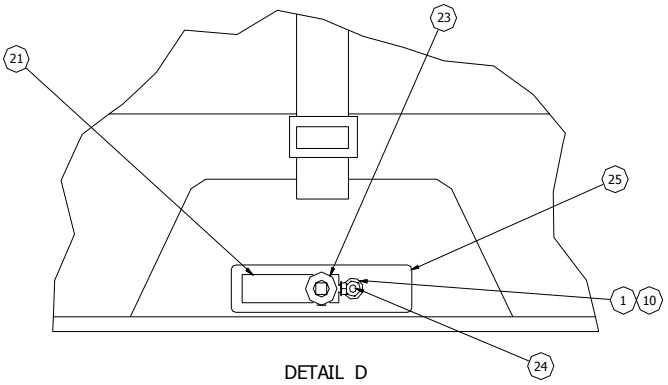

DETAIL D
SCALE 1 / 2

Hydraulic Tank Assembly - 79922200

18	10	00113700	SCREW, HX HD CAP1/4-20 X 3/4
16	1	79948010	REDUCER, PIPE 1/2 X 3/8NPT
15	1	79922270	GASKET, HYD RESERVOIR
14	1	79922260	WELDMENT, COVER HYD RESERVOIR
13	1	79922220	HYD RESERVOIR, MACHINED
12	1	79856800	DECAL, HYDRAULIC OIL (furnished with master sheet 79963000)
11	1	79842700	CAP, HYDRAULIC TANK
10	1	79827000	ELBOW, 90 DEG STREET 3/4 BLACK
9	1	79826000	3/4 X 6" NIPPLE BLK PIPE STEEL
8	1	79821600	ELBOW, 90 DEG FEMALE 2/4 BLACK
7	1	79807100	FILTER, ELEMENT
6	1	79807000	FILTER HEAD
5	1	77742600	BUSHING, REDUCER 3/4 X 1/2
4	1	72709600	DECAL, FLAMMABLE FLUIDS (furnished with master sheet 79963000)
3	2	71101200	PLUG, INTERNAL HEX 1/2 NPT
2	10	00165400	WASHER, LOCK SPLIT 1/4
ITEM	QTY	PART NUMBER	DESCRIPTION

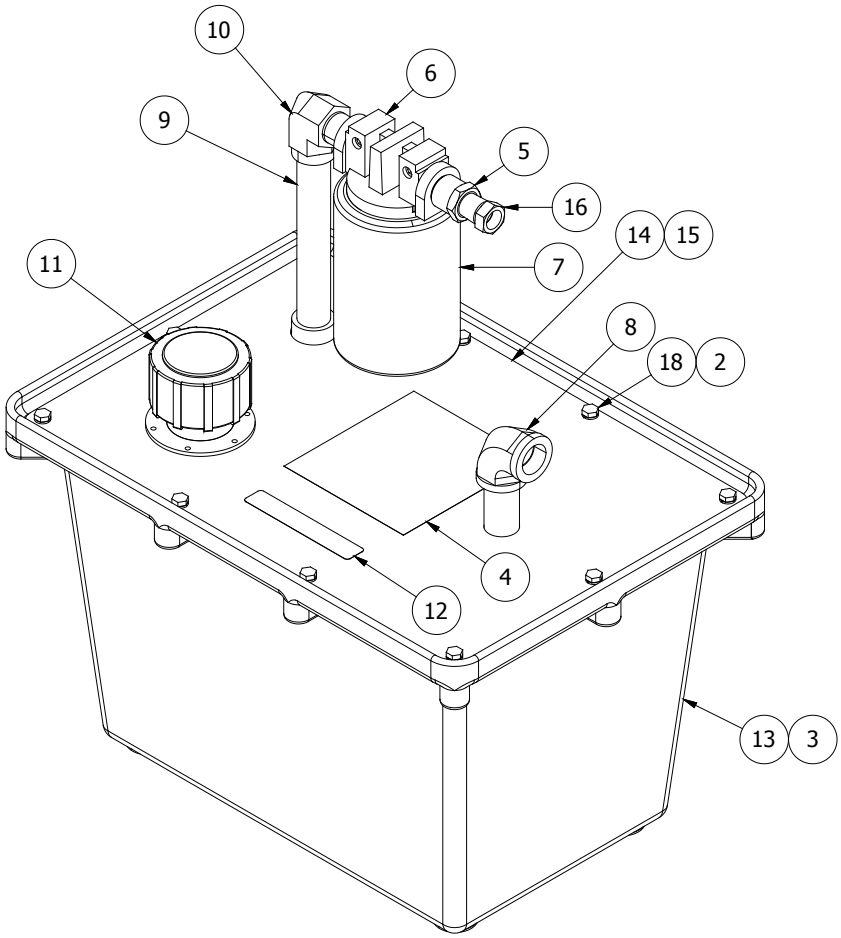

Water/Antifreeze Supply Assembly - 79940100

ITEM	QTY	PART NO.	DESCRIPTION
1	1	75824700	HOSE BARB, 1-1/2 MPT X 1-1/4
2	2	79811400	ELBOW, 90 DEGREE STREET 1-1/2 POLY
3	1	79811700	STRAINER, 1-1/2 NPT
4	1	79811800	NIPPLE, 1-1/2 X 1-1/2 MPT POLYP
5	1	79812100	BARB, HOSE 1-1/2 MPT X 1-1/2 PO
6	1	79821200	EL 90D 1-1/2MPT X 1-1/2 HOSE BARB
7	1	79871900	TEE, 1-1/2 FNPT POLYPRO
8	1	75853650	NIPPLE, 1-1/2" X 6" PP (BLACK)
9	1	79812600	ELBOW, 90 DEG. 1-1/2 NPT FEMALE

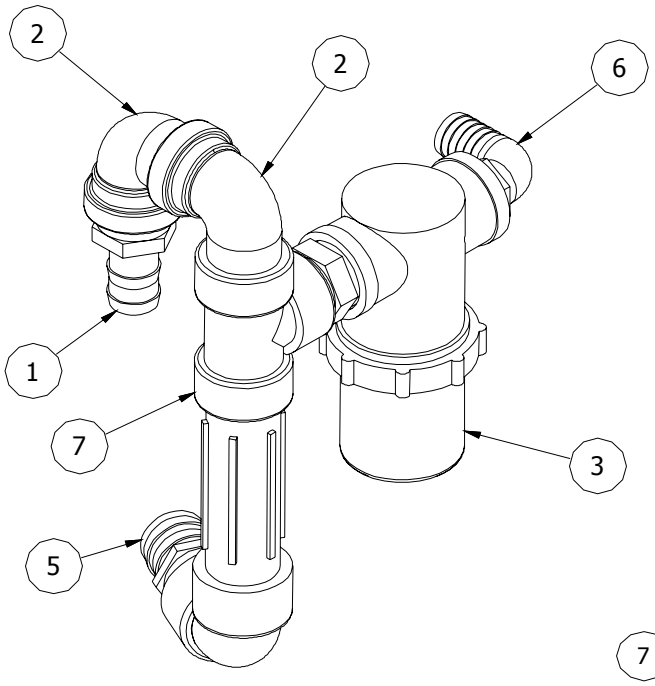

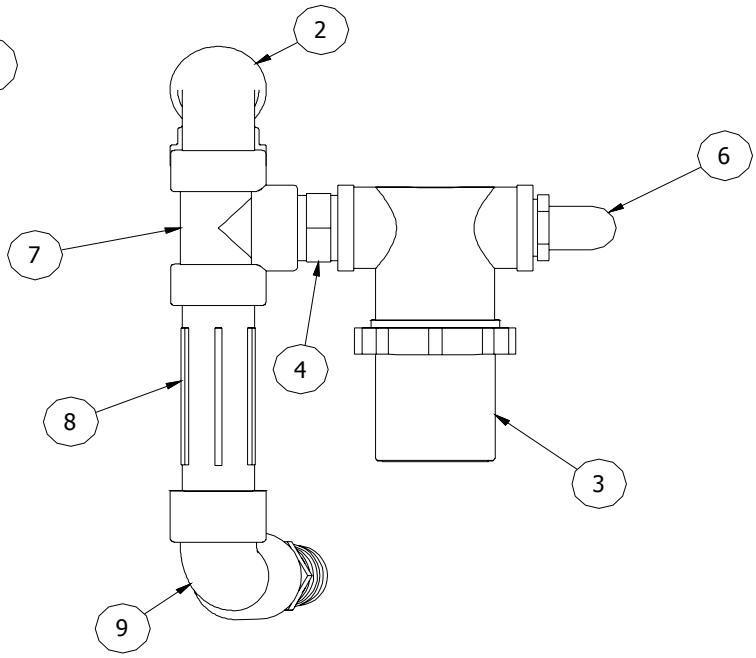

Drain Valve Assembly - 79959000

ITEM	QTY	PART NO.	DESCRIPTION
1	2	73831000	U-BOLT, 3" TUBE OD W/ NUTS
2	1	75853620	1-1/2" POLY STREET ELBOW 45 DEG
3	2	79811500	VALVE, BALL 1-1/4FNPT X 1-1/4F
4	3	79811600	NIPPLE, 1-1/2 X 1-1/4 MPT POLYP
5	2	79812100	BARB, HOSE 1-1/2 MPT X 1-1/2 PO
6	1	79871900	TEE, 1-1/2 FNPT POLYPRO
7	1	79931490	BRACKET, DRAIN VALVE
8	1	79968000	1-1/2 COUPLING

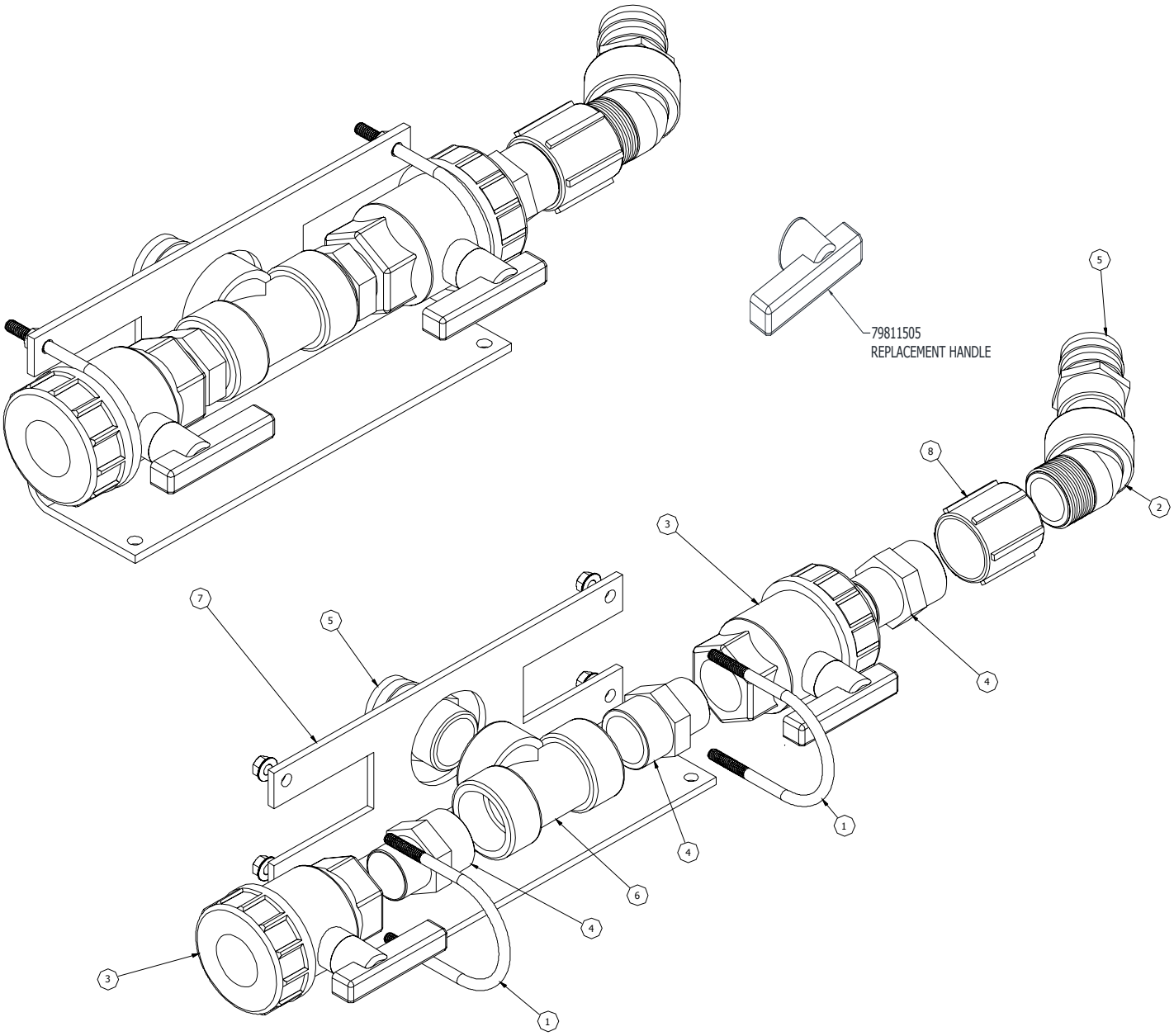

Water Tank Fill Tee - 799858600

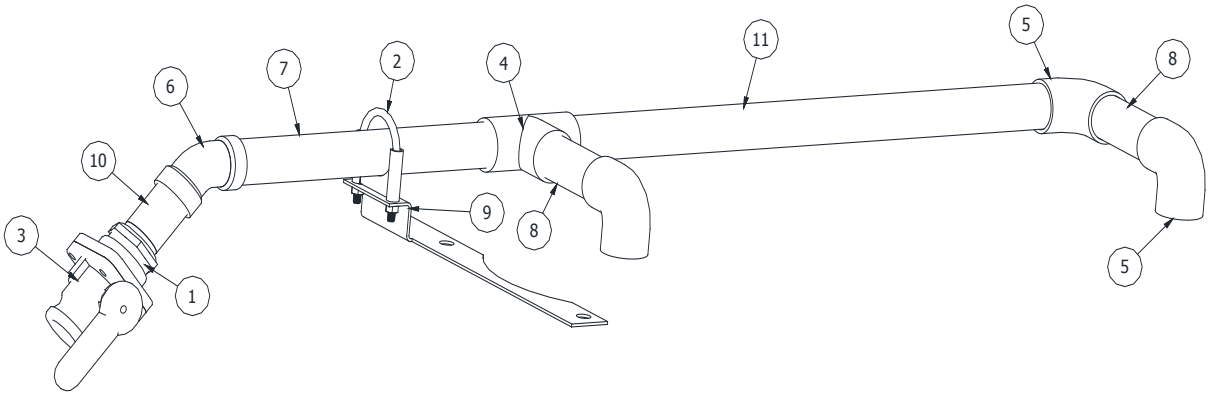

ITEM	QTY	PART NUMBER	DESCRIPTION
1	1	75853630	2"MPT X 1-1/2"FPT REDUCER BUSHING
2	1	77770400	CLAMP, MUFFLER 2-1/4" ZINC PL
3	1	79842800	BALL VALVE 2" W/ QUICK COUPLER
4	1	79921340	TEE, 1-1/2" SCH 40 PVC
5	3	79921360	ELBOW 1-1/2" 90D SCH 40 PVC
6	1	79921370	ELBOW, 1-1/2" 45D SCH 40 PVC
7	1	79985852	PIPE, 1-1/2" X 15.5" - SCH 40 PVC
8	2	79985853	PIPE, 1-1/2" X 6" - SCH 40 PVC
9	1	79985854	BRACKET, HYDRO FILL 2016
10	1	79985855	NIPPLE, 3-1/2" PVC/NPT SCH 40
11	1	79985861	PIPE, 1-1/2" X 28" - SCH 40 PVC

Fill Reel Assembly - 79940470

20	1	79962100	SWIVEL, HP REEL 1/2"
19	1	79940495	WELDMENT, REEL BASE
18	1	79940480	U-BOLT 1X1-3/4 1/4-20
16	1	79935900	WELDMENT, LEGACY SIDE T4
15	4	79920151	HEX NUT, 3/8-16 GRADE 8
14	4	79920150	HEX HD BOLT 3/8-16 X 1-1/2 GR8
10	1	79904476	ADAPTER,1/2NPT-8JIC 45D BRASS
7	2	77705101	ELBOW, 90 DEG. STREET 1/2"
6	1	75867030	ADAPTER, 3/4 GHT SWVL - 1/2 NPT
5	8	75852700	WASHER, 3/8" ID USS GRD 9
3	1	72727500	REEL, HP HOSE
ITEM	QTY	PART NUMBER	DESCRIPTION

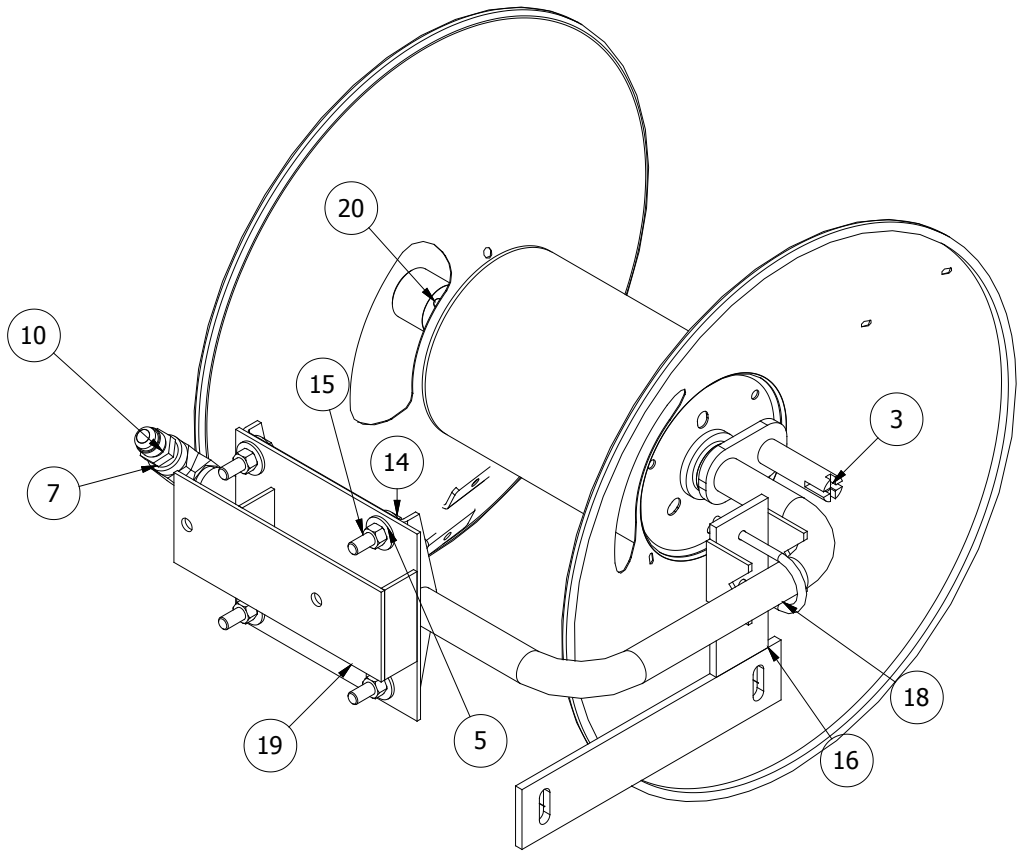

Wash Down Accessory Package - 73817300

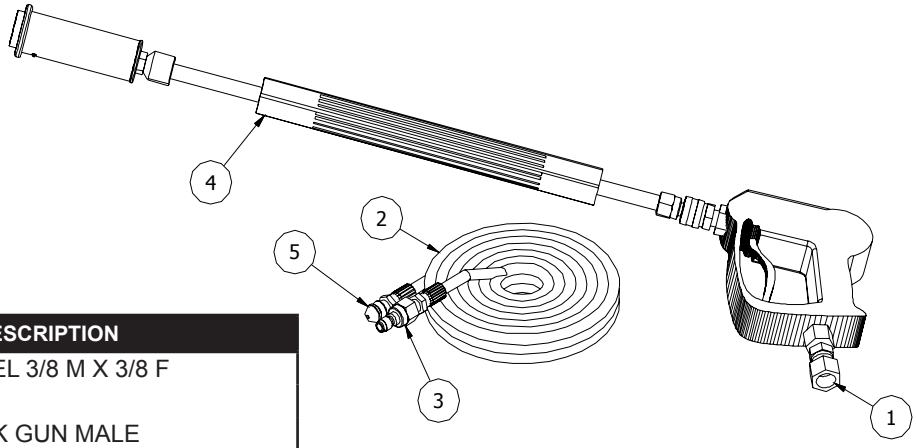

ITEM	QTY	PART NO.	DESCRIPTION
1	1	73816500	ADAPTER, SWIVEL 3/8 M X 3/8 F
2	1	77719500	HOSE, 1/4" X 75'
3	1	77721400	COUPLER, QUICK GUN MALE
4	1	77799800	HANDGUN LANCE V-NOZZLE ASSEMBLY
5	1	77815800	NOZZLE, 1/4" DOMED (6)

HandGun Lance V-Nozzle Assembly - 77799800

ITEM	QTY	PART NO.	DESCRIPTION
1	1	77720100	GUN, HAND
2	1	77721300	COUPLER, QUICK GUN, 1/4" NPT MALE
3	1	77721400	COUPLER, QUICK GUN, MALE
4	1	553006-01	LANCE, INSULATED GRIP, 18"
5	1	71126100	NOZZLE - VARIABLE .080
6	1	79874400	FITTING, WAND ANTI-KICKBACK

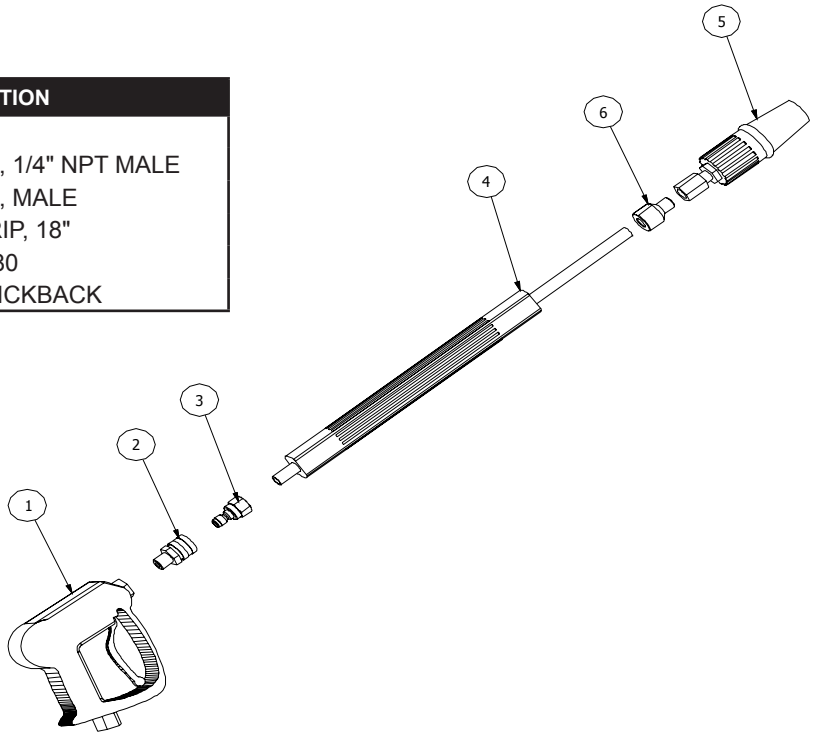

Baseplate Assembly - 79958600

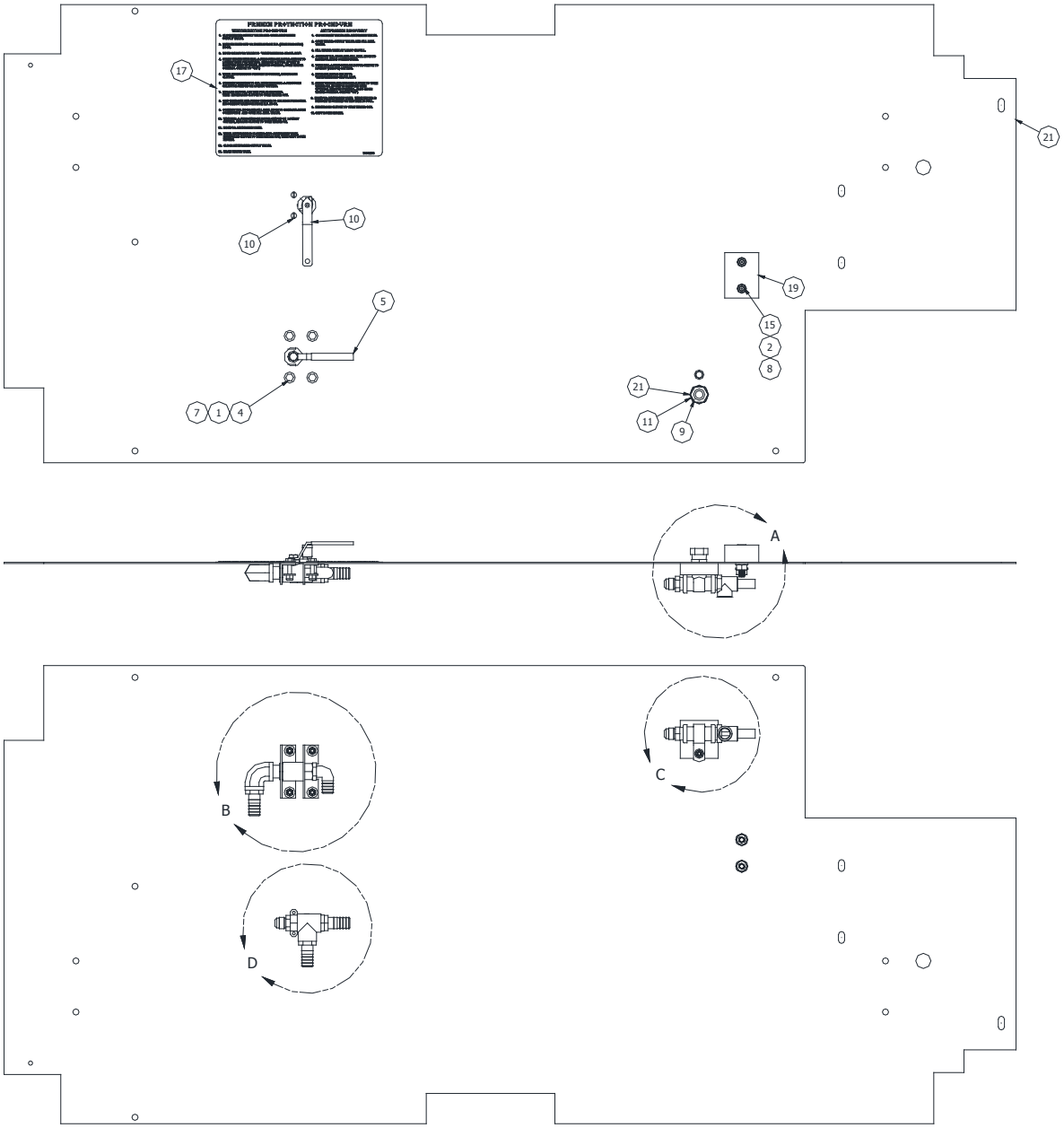

Baseplate Assembly - 79958600

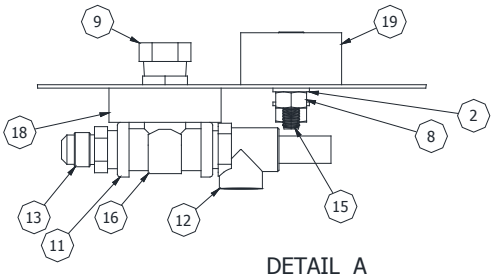

DETAIL A

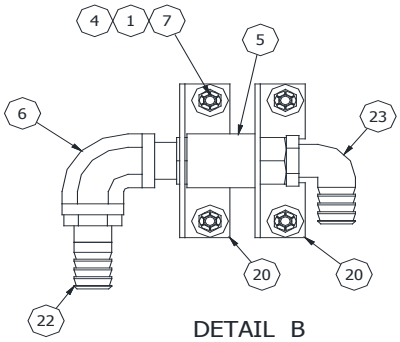

DETAIL B

ITEM	QTY	PART NUMBER	DESCRIPTION
1	8	02825100	WASHER, FLAT 1/4 USS
2	2	03366300	WASHER, FLAT 3/8 SAE
3	1	521012-04	SCREW, HEX HD 1/4-20 X 1-1/2
4	4	71705500	SCREW, HX HD 1/4-20 X 1-1/4
5	1	72704800	VALVE, BALL 1/2 M X 1/2 F
6	1	72714600	ELBOW, 90 DEG. FEMALE 1/2
7	5	73821200	NUT, NYLON LOCKING 1/4-20
8	2	77748000	NUT, STOVER LOCK 2/8-16 UNC
9	1	77752800	ADAPTER, SWIVEL 1/2 NPT STEEL
10	1	79904410	VALVE, 1/2 BRASS 3 WAY
11	1	79904466	TEE, 1/2" NPT BRASS
12	1	79904475	VALVE, RELIEF
13	2	79904476	ADAPTER,1/2NPT-8JIC 45D BRASS
14	2	79908200	WASHER, FLAT 1/4 SAE
15	2	79909900	SCREW, SOCKET HD 3/8-16 X 1-3/4
16	1	79934100	CLAMP 3/4 CONDUIT 1 HOLE
17	1	79934200	DECAL, FREEZE PROCEDURE- WARRIOR
18	1	79934300	SPACER-RELIEF VALVE
19	1	79950600	BLOCK HP RESTING WARRIOR
20	2	79956900	ANGLE FILL REEL SHUTOFF MNT
21	1	79958610	PLATE, BACKEND T4
22	3	79843910	3/4" HOSE BARB X 1/2 MPT STRAIGHT
23	1	79843900	3/4" HOSE BARB X 1/2" MNPT ELBOW

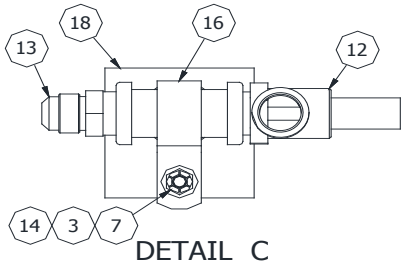

DETAIL C

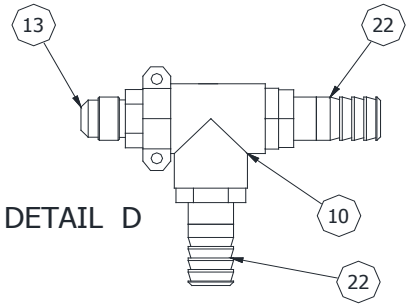

DETAIL D

Recirc Hose Assy, Water Tank - 79949000

ITEM #	QTY	PART NO.	DESCRIPTION
1	8.6ft	79904483	HOSE, 1/2 PUSH-ON 300 PSI
2	1	79904479	SWIVEL,8JIC 45D-BARB BRASS
3	1	79904478	EL, 90D 1/2NPT-BARB BRASS

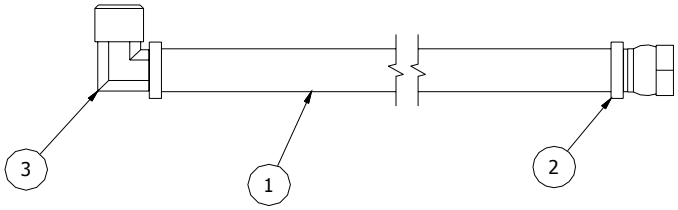

Recirc. Hose Assemblies 79948700, 79948800, & 79949105

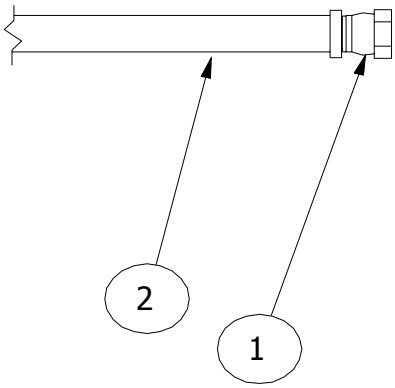

Recirc Hose Assembly, Fill Reel 79948700

ITEM	QTY	PART NO.	DESCRIPTION
1	1	79904479	SWIVEL,8JIC 45D-BARB BRASS
2	6.3ft	79904483	HOSE, 1/2 PUSH-ON 300 PSI

Recirc Hose Assembly, Fill Shutoff 79948800

ITEM	QTY	PART NO.	DESCRIPTION
1	1	79904479	SWIVEL,8JIC 45D-BARB BRASS
2	2.3ft	79904483	HOSE, 1/2 PUSH-ON 300 PSI

Recirc Hose Assembly, Antifreeze - Ultimate 79949105

ITEM	QTY	PART NO.	DESCRIPTION
1	1	79904479	SWIVEL,8JIC 45D-BARB BRASS
2	12.5ft	79904483	HOSE, 1/2 PUSH-ON 300 PSI

Assy, Tank Fill - 79928600

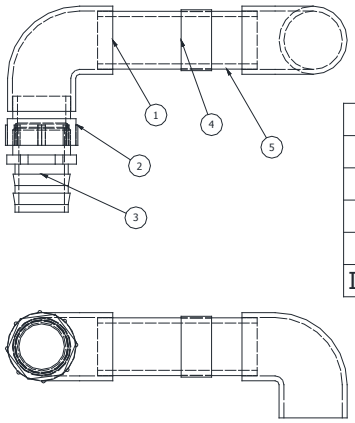

ITEM	QTY	PART NUMBER	DESCRIPTION
5	1	79921350	PIPE, 1-1/2" SCH 40 PVC
4	1	79950410	CLEAR VIEW PVC HOSE
3	1	79812100	BARB, HOSE 1-1/2 MPT X 1-1/2 PO
2	1	79921322	ADAPTER, 1-1/2 PVC TO 1-1/2 NPT
1	2	79921360	ELBOW 1-1/2" 90D SCH 40 PVC

Hydrant Fill Assy, Warrior - 79958000

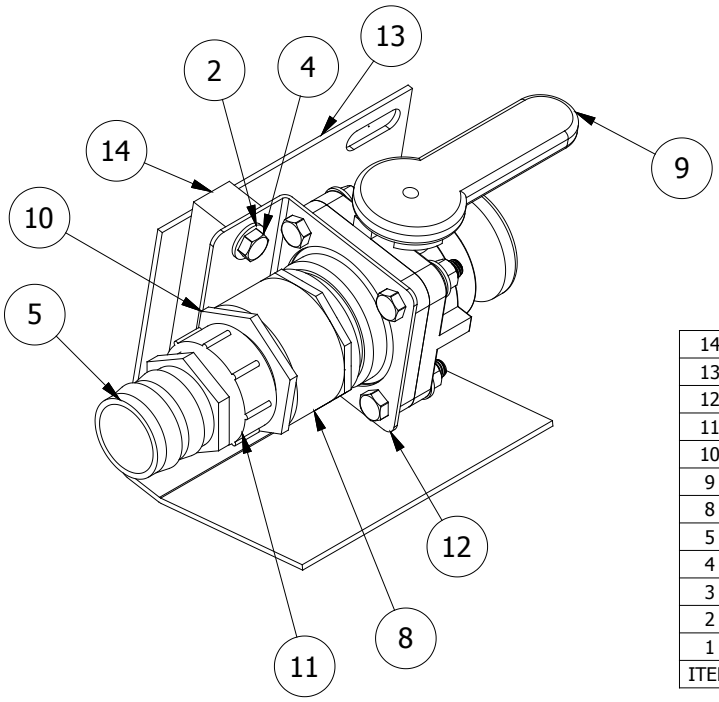

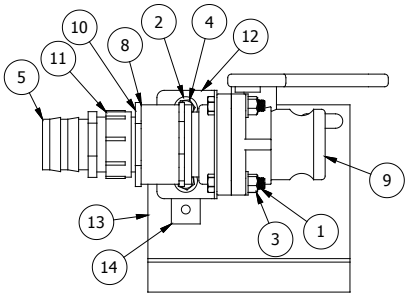

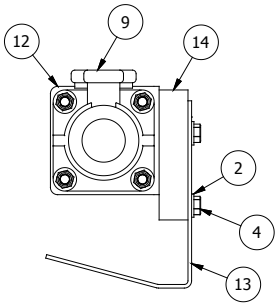

ITEM	QTY	PART NUMBER	DESCRIPTION
14	1	79950420	SPACER, HYDRANT FILL
13	1	79950400	PLATE, HYDRANT FILL MOUNT
12	1	79935100	PLATE, BALL VALVE MOUNTING BRACKET
11	1	79921322	ADAPTER, 1-1/2 PVC TO 1-1/2 NPT
10	1	79921321	REDUCER, 2" TO 1-1/2 SCH 40 PVC
9	1	79842800	BALL VALVE 2" W/ QUICK COUPLER
8	1	79830200	ADAPTER, 2" MALE SCHEDULE 80 PVC
5	1	79812100	BARB, HOSE 1-1/2 MPT X 1-1/2 PO
4	4	77738100	SCREW, HEX HD 3/8-16 X 1
3	4	522132-00	NUT, NYLON LOCKING 3/8-16
2	8	03366300	WASHER, FLAT 3/8 SAE
1	4	00116900	SCREW, HEX HD 3/8-16 X 1-3/4

Latch Assembly, 90 Deg Lower - 79957000

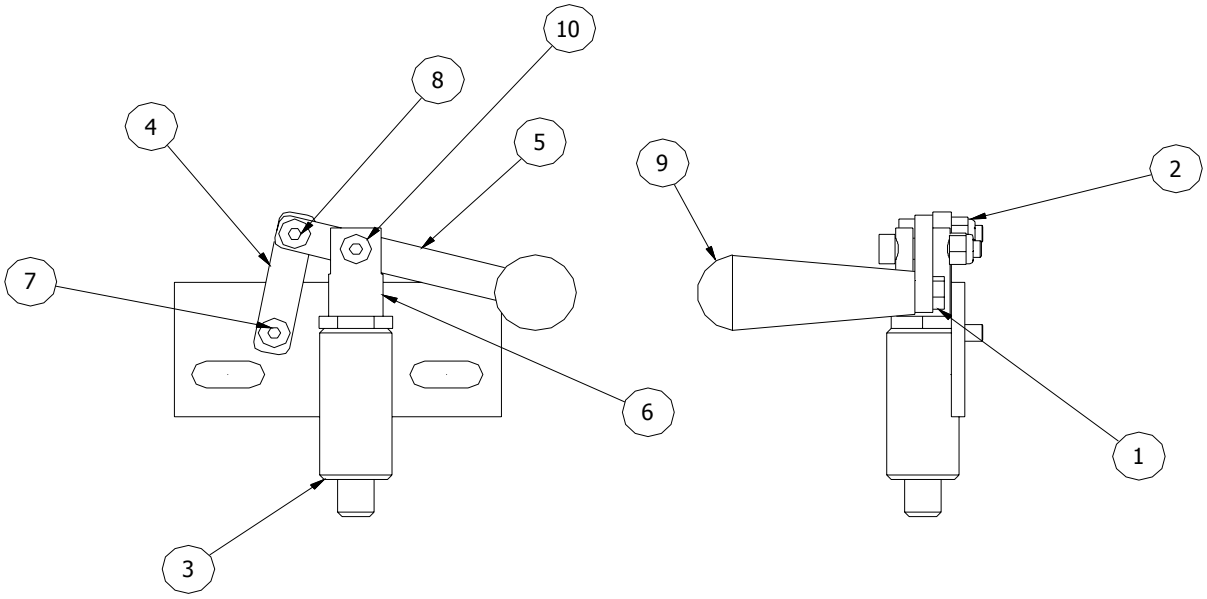

ITEM	QTY	PART NUMBER	DESCRIPTION
10	1	79957080	SCREW, SHOULDER 5/16 X 3/4 SS
9	1	79957070	HANDLE, BLK PLST 3" LNG 1/4-20
8	1	79957060	SCREW, SHOULDER 5/16 X 1/2 SS
7	1	79957050	SCREW, SHOULDER 5/16 X 1/4 SS
6	1	79957040	COUPLER, LEVER ARM - SPRING PIN
5	1	79957030	PLATE, HANDLE LEVER ARM
4	1	79957020	PLATE, PIVOT LEVER ARM
3	1	79957010	WLDMNT, SPRING PIN - MNTNG BRACKET
2	2	73821200	NUT, NYLON LOCKING 1/4-20
1	1	00113700	SCREW, HX HD CAP1/4-20 X 3/4

High Pressure Reel Assembly - 79958300

ITEM	QTY	PART NUMBER	DESCRIPTION
1	4	00115100	SCREW, HX HD CAP 5/16-18 X 1"
2	11	00165800	WASHER, LOCK SPLIT 3/8
4	6	03366300	WASHER, FLAT 3/8 SAE
7	9	77738100	SCREW, CAP HX HD 3/8-16 X 1
8	2	77748000	NUT, STOVER LOCK 2/8-16 UNC
10	1	79904930	COUPLING, HEX 1/2NPT STEEL
11	1	79932000	REEL, HP WARRIOR
12	1	79932055	ELBOW, FEMALE PIPE 1/2NPSMX1/2NPT
13	1	79932060	SWIVEL, 1/2-14 NPT-NPSM ELBOW
17	2	79948010	REDUCER, PIPE 1/2 X 3/8NPT
18	2	79948080	HOSE, HYD BYPASS WARRIOR
19	1	79948110	ELBOW, 12 MALE STREET 37DEGREE
21	1	79962100	SWIVEL, 5000 PSI 1/2 SUPER-SWIVEL (SUPPLIED W/REEL)
22	1	79962200	WELDMENT, CONTROL PANEL MOUNT (09)
23	1	79962400	UPPER REEL LOCK, SOLDIER
24	1	79962500	BRACKET, HP REEL NIPPLE SUPPORT
26	1	79962630	PIPE SS, 1/2" NPT - 10" LONG
27	1	77770800	NIPPLE, HEX 1/2 NPT
63	1	79966320	LATCH, SPRING BOLT ZN PLT
64	4	71705500	SCREW, HX HD 1/4-20 X 1-1/4
65	4	00165400	WASHER, LOCK SPLIT 1/4
67	1	79947870	DECAL-WATER OFF BEFORE ENGINE
74	2	522132-00	NUT, NYLON LOCKING 3/8-16
75	1	79970200	DECAL, HOSE-IN-OUT-SPIN
82	1	79962700	ASSY, HOSE GUIDE PIVOT WAR 09
97	1	79932180	ASSY, HIGH TORQUE MOTOR W/ SPROCKET
98	8	00162700	WASHER, FLAT 3/8
99	4	01733900	NUT, HEX 3/8-16
103	3	00162600	WASHER, FLAT 5/16 USS
104	3	523011-02	WASHER, LOCK SPLIT 5/16
105	3	02939000	SCREW, CAP HX HD 5/16-18 X 3/4
106	1	79962600	ASSY, HP NIPPLE - GAUGE - WARRIOR 09
109	1	79948170	ASSY, HYD VALVE SINGLE SECTION
114	2	79947360	SCREW, 3/8-16 x 3-3/4 HX HD
115	1	79932035	CHAIN, HP REEL DRIVE (NOT SHOWN)
116	1	79932183	LINKS, #35 CHAIN EXTENSION (NOT SHOWN)
117	2	79962320	HOSE, HP REEL PROTECTIVER COVER (NOT SHOWN)
118	2FT	79966200	FLEX HEAT SHRINK TUBING

High Pressure Reel Assembly - 79958300

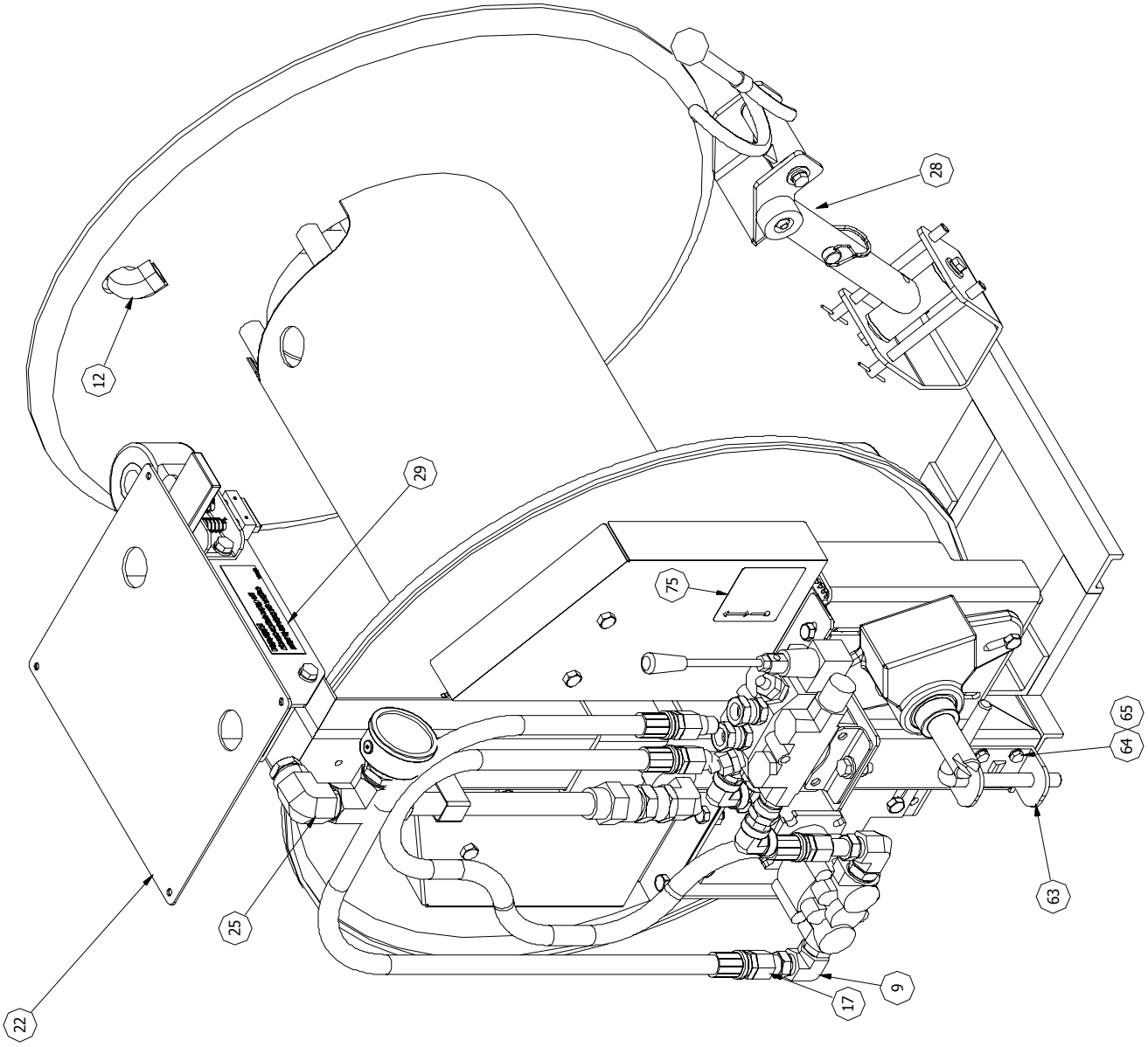

High Pressure Reel Assembly - 79958300

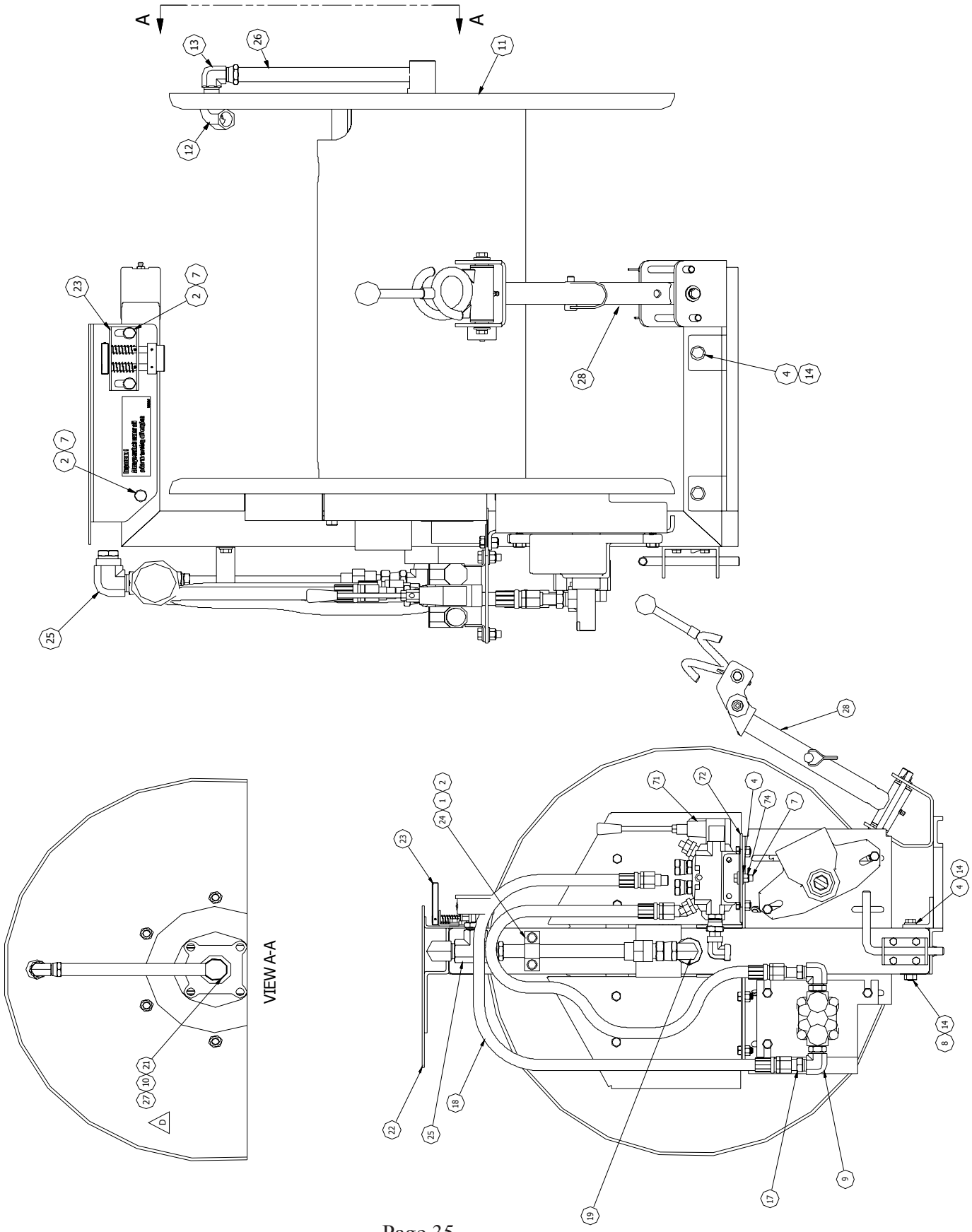

Hose Guide Assembly - 79962700

ITEM	QTY	PART NO.	DESCRIPTION
1	1	00113901	SCREW, HX HD CAP 1/4-20 X 1 ZN
2	4	00162600	WASHER, FLAT 5/16 USS
3	1	02821200	NUT, NYLOCK JAM 1/4-20
4	1	02825100	WASHER, FLAT 1/4 USS
5	4	02939000	SCREW, CAP HX HD 5/16-18 X 3/4
6	2	44218300	FITTING STANDARD DRIVE
7	2	75845090	SHAFT, SS .75 O.D.
8	4	77743400	WASHER, LOCK SPLIT 5/16
9	2	79911500	BEARING, FLANGED 3/4 ID X 1/2
10	1	79911600	COILED HOSE GUIDE w/ BEARINGS
12	1	79950810	BUMPER, 1-1/2" DIA X 3/4" HG
13	2	79962710	PIN, 3/8" DIA - 4" USABLE -T-HNDL
14	1	79962720	LEVER, STEEL BALL HANDLE 4"
15	1	79962800	WLDMNT, HG CANTILEVER SUPPORT
16	1	79962900	WLDMNT, PIVOT HG 90DEG ARM
17	1	79966310	PIN, LOCKING 3/8" DIA - 1-3/8" USABLE

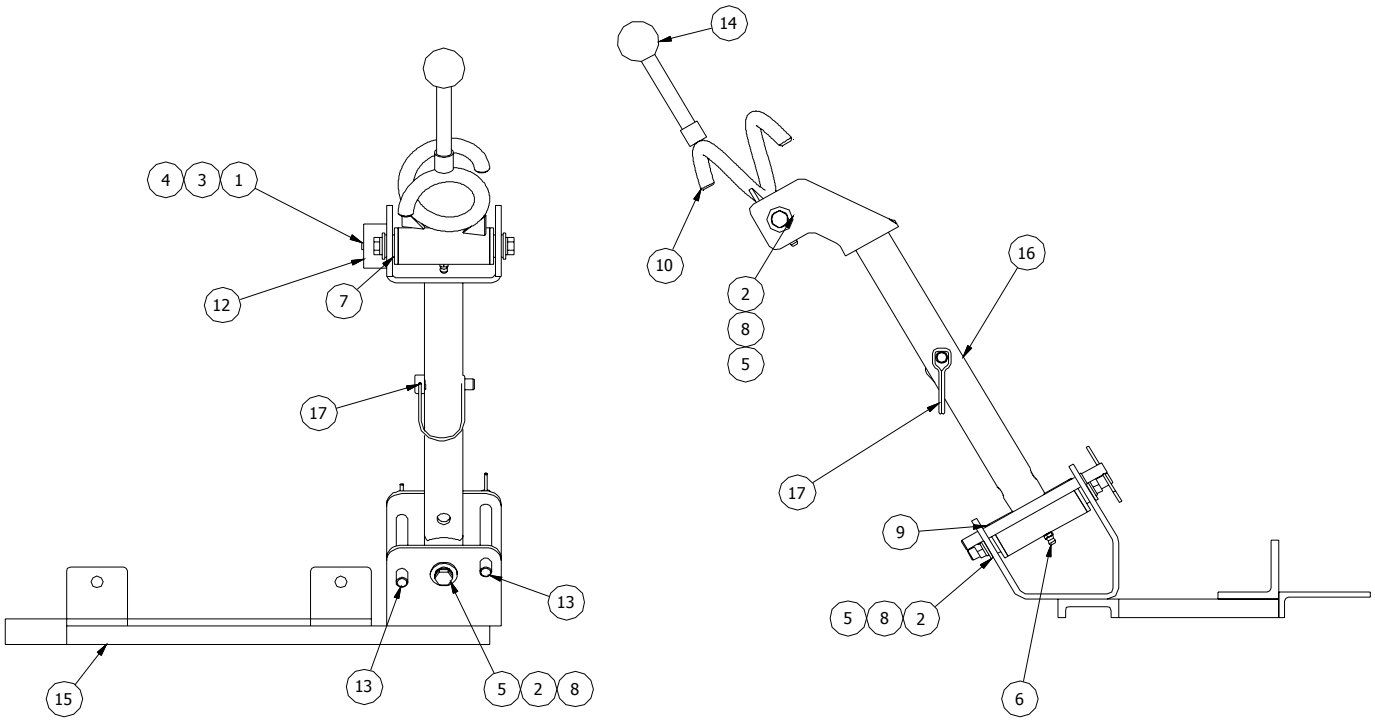

Optional Wireless Remote Control - 79947900

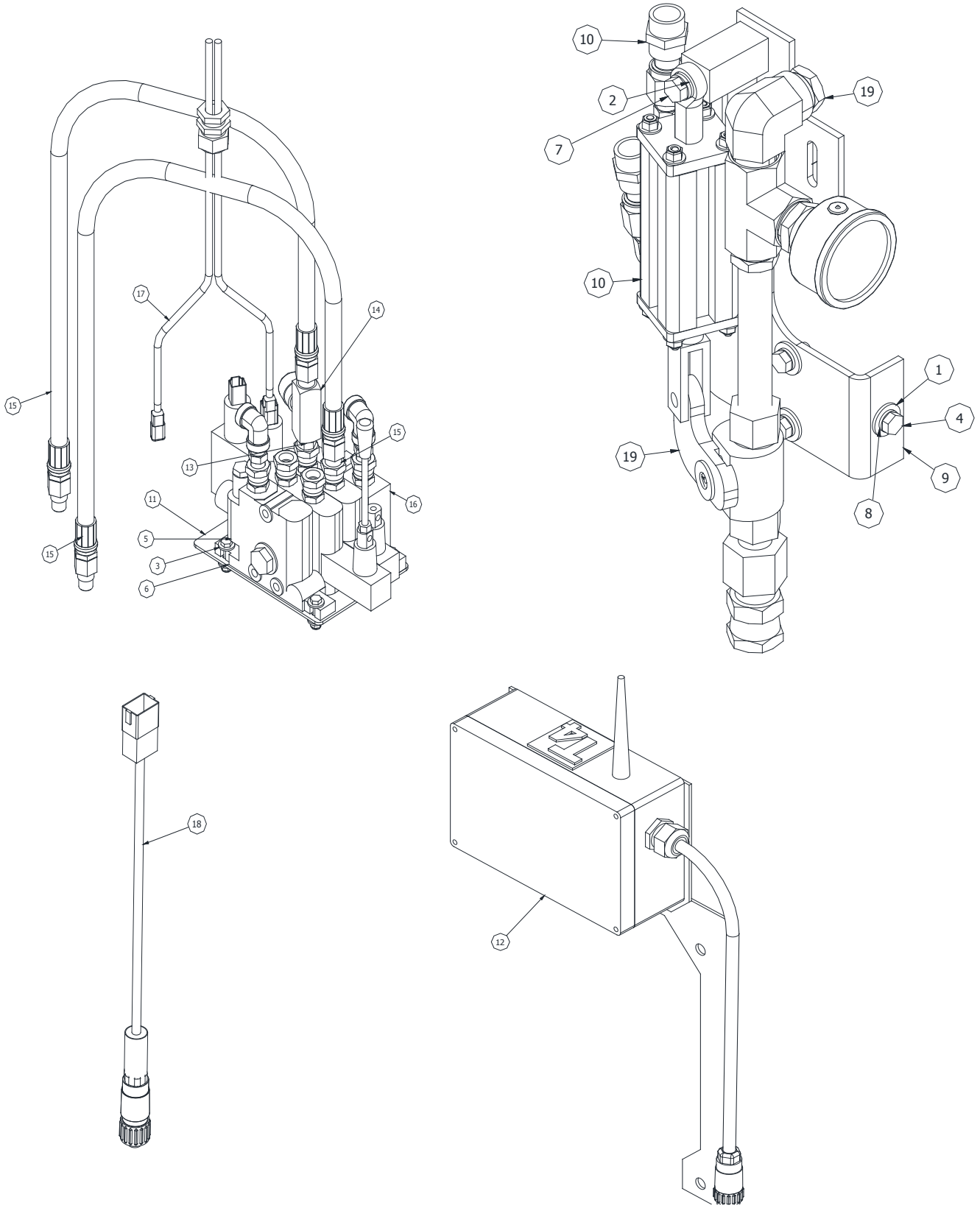

Optional Wireless Remote Control - 79947900

ITEM	QTY	PART NUMBER	DESCRIPTION
1	3	00162600	WASHER, FLAT 5/16 USS
2	1	00165800	WASHER, LOCK SPLIT 3/8
3	8	02825100	WASHER, FLAT 1/4 USS
4	3	02939000	SCREW, CAP HX HD 5/16-18 X 3/4
5	4	71705500	SCREW, HX HD 1/4-20 X 1-1/4
6	4	73821200	NUT, NYLON LOCKING 1/4-20
7	1	77738100	SCREW, CAP HX HD 3/8-16 X 1
8	3	77743400	WASHER, LOCK SPLIT 5/16
9	1	79915580	WELDMENT, CYL BRACKET
10	1	79915600	ASSY, HYD VALVE OPERATOR
11	1	79947560	PLATE, HYD VALVE 4 HOLE
12	1	79947901	ASS'Y, REMOTE CONTROL SYSTEM
13	1	79948030	NIPPLE, HEX 3/8 NPT STEEL
14	1	79948040	VALVE, FLOW CONTROL 3/8
15	2	79948080	HOSE, 1/2" NPT X 36-1/2
16	1	79948220	ASSY, TENDEM SOLENOID VALVE
17	1	79948260	CORD ASSY, TANDEM SOLENOID
18	1	79953400	WIRING HARNESS, T4 REMOTE - 2016
19	1	79960300	ASSY, HP NIPPLE - GAUGE & VALVE

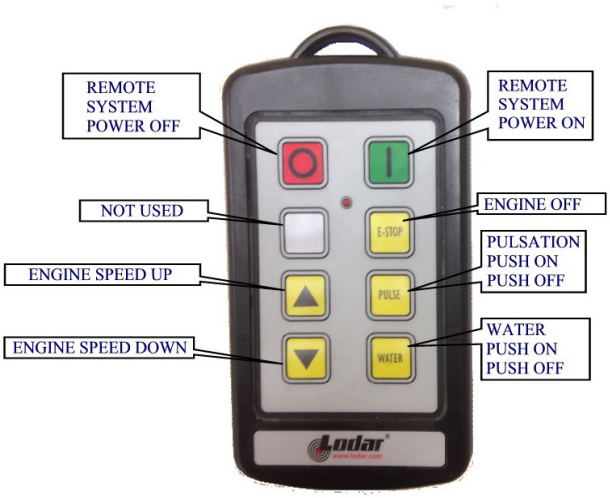

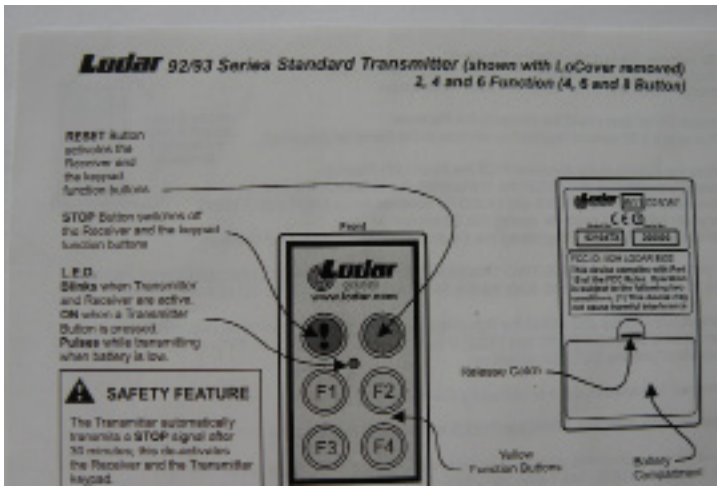

Optional Remote Control - 79947900

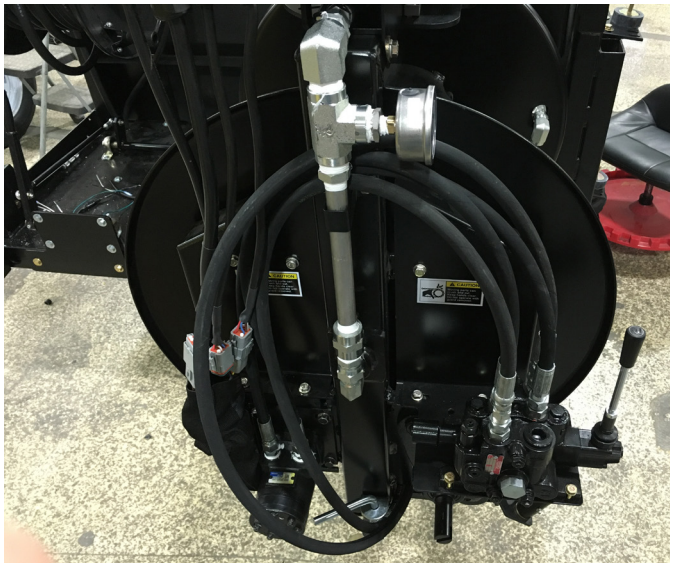

Fig. 78-1

Original hydraulic valve and HP water connections on Units without Remote Control

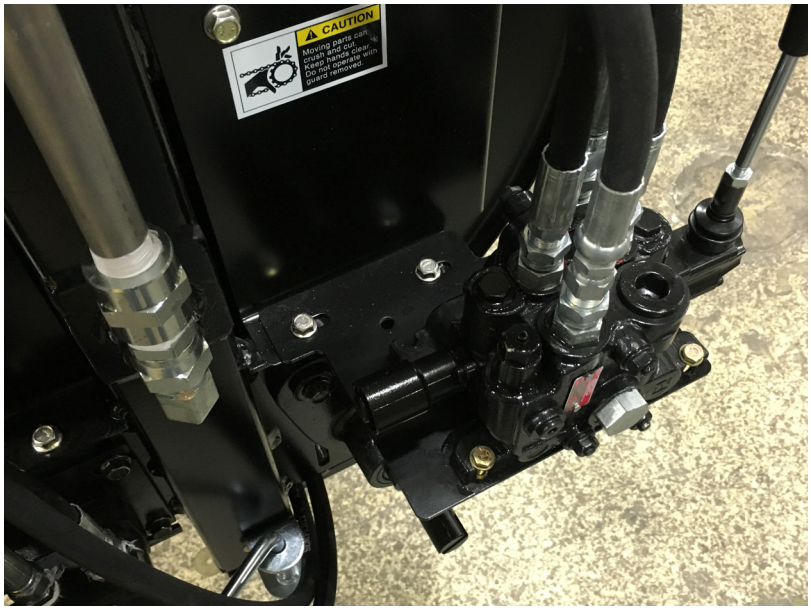

Fig. 78-2

Single section hydraulic valve is replaced by 2 section hydraulic valve assembly

One section is manually operated to control reel rewind, the other is electrically operated by remote control system to control water ON/OFF

Fig. 78-3

View of hydraulic cylinder attached to HP water Valve

Optional Remote Control - 79947900

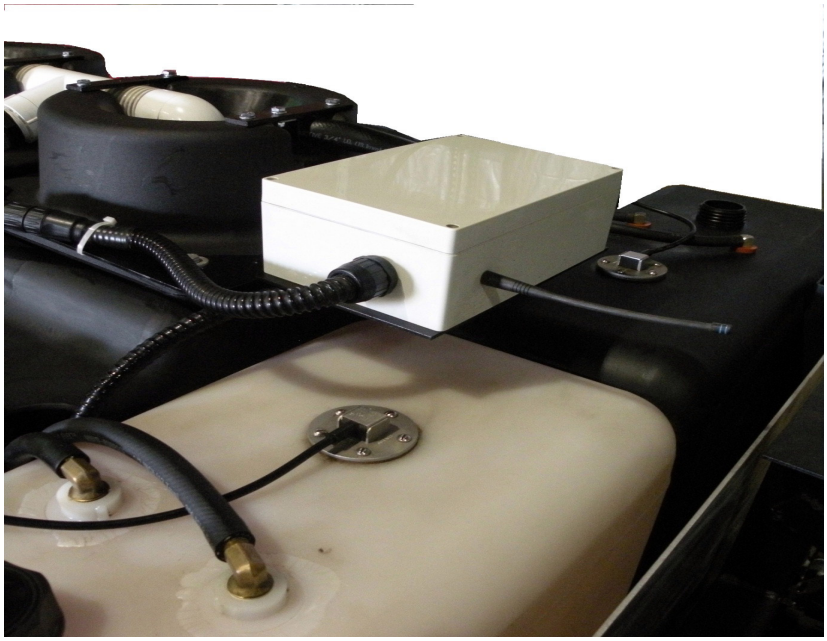

Wireless Remote

Control Reciever Unit

Fig. 79-1

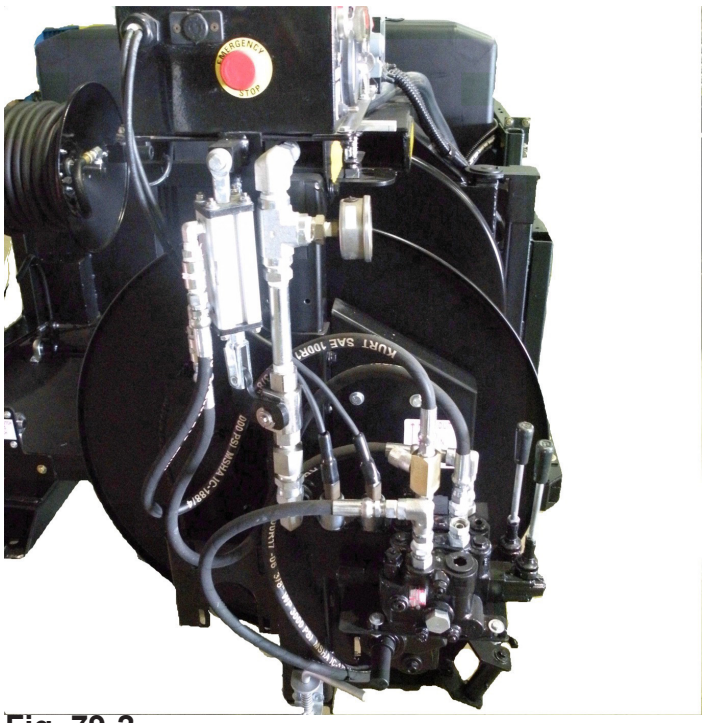

Fig. 79-2

Complete water control with 2 section hydraulic valve, hydraulic cylinder and high pressure water valve

How to Link Hand Held Wireless Remote

To Remote Control Receiver Unit

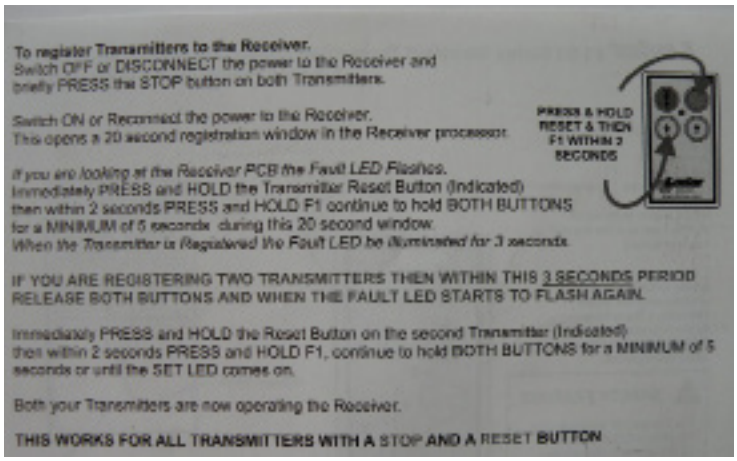

To register Transmitters to the Receiver.
Switch OFF or DISCONNECT the power to the Receiver and briefly PRESS the STOP button on both Transmitters.

Switch ON or Reconnect the power to the Receiver.
This opens a 20 second registration window in the Receiver processor.

If you are looking at the Receiver PCB the Fault LED Flashes.
Immediately PRESS and HOLD the Transmitter Reset Button (Indicated) then within 2 seconds PRESS and HOLD F1 continue to hold BOTH BUTTONS for a MINIMUM of 5 seconds during this 20 second window.
When the Transmitter is Registered the Fault LED be illuminated for 3 seconds.

PRESS & HOLD RESET & THEN F1 WITHIN 2 SECONDS

IF YOU ARE REGISTERING TWO TRANSMITTERS THEN WITHIN THIS 3 SECONDS PERIOD RELEASE BOTH BUTTONS AND WHEN THE FAULT LED STARTS TO FLASH AGAIN.

Immediately PRESS and HOLD the Reset Button on the second Transmitter (Indicated) then within 2 seconds PRESS and HOLD F1, continue to hold BOTH BUTTONS for a MINIMUM of 5 seconds or until the SET LED comes on.

Both your Transmitters are now operating the Receiver.

THIS WORKS FOR ALL TRANSMITTERS WITH A STOP AND A RESET BUTTON

Optional Footage Counter - 79975000

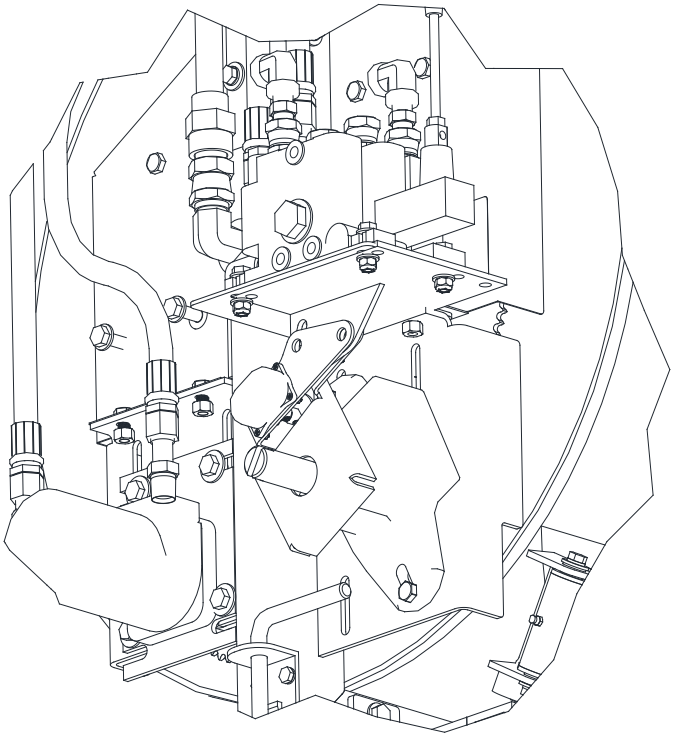

Footage Counter Sensor

Mounted to Reel

(Guard Removed To Show Mounting)

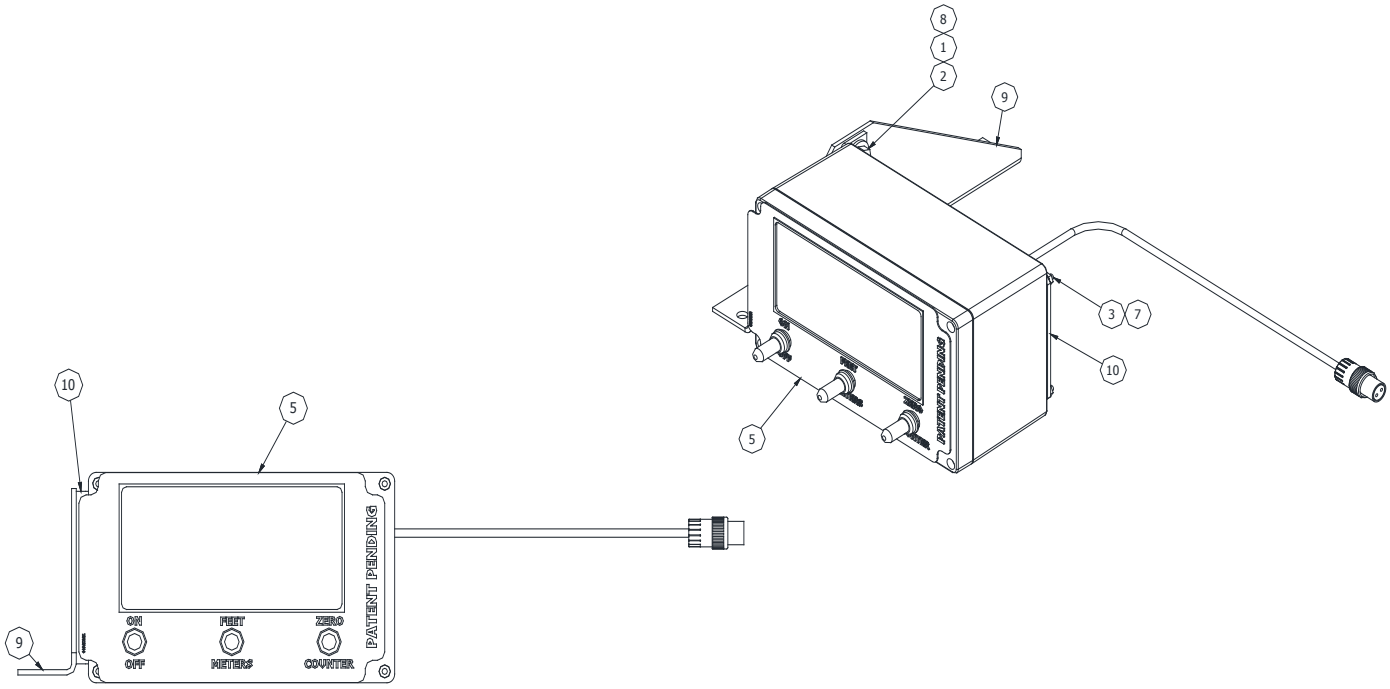

Optional Footage Counter - 79975000

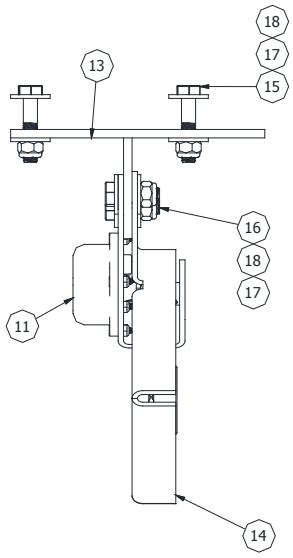

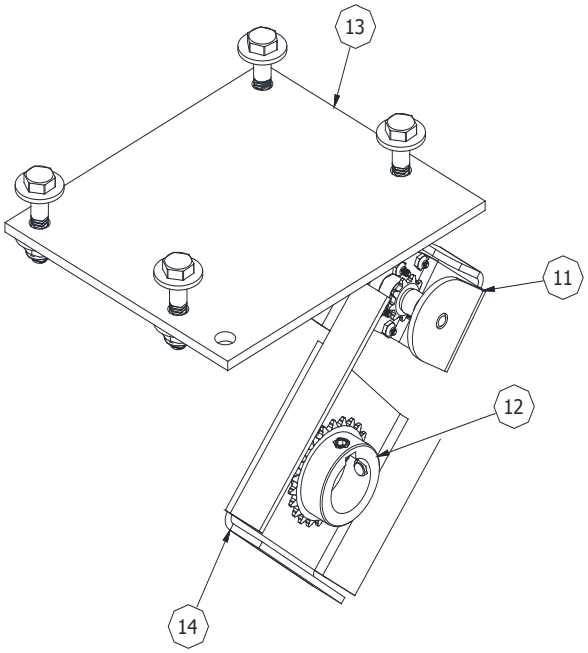

18	6	522122-00	NUT, LOCK 5/16-18
17	12	00162600	WASHER, FLAT 5/16 USS
16	2	00115100	SCREW, HEX HD 5/16-18 X 1
15	4	44225000	SCREW, HEX HD 5/16-18 X 1-1/2
14	1	75879210	BRACKET, WARRIOR COUNTER CHAIN CUARD
13	1	75879200	WELDMENT, WARRIOR SWING COUNTER
12	1	75879150	SPROCKET, 1 BORE 23 TOOTH
11	1	75879100	ASSEMBLY, COUNTER CARRIAGE
10	1	79975400	PLATE, JETTER COUNTER BOX MOUNT
9	1	79975300	PLATE, JETTER CNT CONTROL BOX MOUNT
8	2	79975200	SCREW, PHIL FLAT HD 1/4-20X 1 SS
7	4	77789100	NUT, KEP 6-32 ZN PLT
6	1	75879185	MASTER LINK ROLLER CHAIN #25
5	1	75875300	LED ENCLOSURE ASSEMBLY - HOSE COUNTER
4	10in	75879180	ROLLER CHAIN, #25
3	4	61026000	SCREW, 6-32 X 1/2 PAN HD PHIL
2	2	02825100	WASHER, FLAT 1/4 USS
1	2	02821200	NUT, NYLOCK JAM 1/4-20
ITEM	QTY	PART NUMBER	DESCRIPTION

79953600 - Control Box Assembly

55	5	79957500	DESICCANT BAG, INDICATING
54	1	79955100	BUZZER WITH WIRES
53	1	79954500	LEGEND PLATE, E-STOP
52	1	79954400	SWITCH, E-STOP
51	14	79953710	CONTACT, SOCKET 16-18 DEUTSCH
50	2	79953700	WEDGE, PLUG 8WAY DEUTSCH
49	2	79953690	CONNECTOR, DEUTSCH 8 WAY GREY PLUG
48	3	79953680	TERMINAL DELPHI FEMALE 12-10
47	1	79953670	TPA CLIP, 3POS FEMALE CONNECT DELPHI
46	1	79953660	CONNECTOR, DELPHI 3POS MALE
45	1	79953650	WEDGE, PLUG 12WAY DEUTSCH
44	1	79953640	CONNECTOR, DEUTSCH 12 WAY GREY PLUG
43	1	79953630	ENCLOSURE, WARRIOR MOD 2016
42	1	79953620	STRAIN RELIEF, BLK 3/4 NPT X .35-.63"
41	3	79953610	STRAIN RELIEF, BLK 1/2 NPT X .24-.47"
40	1	79953550	TRAILER CABLE, PVC 14-12-10 GA
39	1	79953540	TRAILER CABLE, PVC 16/6
38	2	79953320	TRAILER CABLE, PVC 18/7
37	1	79946900	SET, WARRIOR CONTROL JUMPERS
36	4	79946700	FUSE HOLDER, DIN RAIL SCREWLESS
35	2	79945740	ORING, BUNA 3-1/4ID - 3-3/8
34	2	79945730	ORING BUNA 1-7/8 - 2" OD
33	2	79945720	ORING, BUNA 1/2ID - 5/8OD
32	6	79945710	ORING, BUNA 3/8ID - 1/2OD
31	2	79945620	DIN RAIL- 8.5 INCHES
30	2	79945610	DIN RAIL- 17 INCHES
29	1	79945550	RELAY, IDEC SMART
28	1	79945540	TAG, TERM BLOCK MARKING 1-100
27	15	79945510	JUMPER-TERMINAL BLOCK
26	36	79945500	TERMINAL BLOCK, DIN RAIL SCREWLESS
25	1	79945410	DECAL, ANTI-FREEZE
24	2	79945400	GAUGE, TANK LEVEL 2008
23	3	79944854	SEAL, DELPHI 4.3-3.45 BLUE
22	10	79944812	CONTACT, SOCKET 14-16 AWG DEUTSCH
21	1	79944720	HARNESS, DISPLAY CONN A - BOX INT
20	1	79944710	HARNESS, KEYSWITCH BOX-INT
19	1	79944660	DECAL, WARRIOR ENCLOSURE FACE
18	1	79944650	ROCKER, BLACK DPDT 20A, 12VDC
17	1	79944640	ROCKER, GREEN ILLUM SPST 20A, 12VDC
16	1	79944630	ROCKER, BLUE ILLUM SPST 20A, 12VDC
15	2	79944620	ROCKER, BLACK SPST 20A, 12 VDC
14	1	79925320	KEYSWITCH, 3POS SEALED T4 10A 12V
13	1	79925310	DISPLAY-CONTROL, T4 ENGINE
12	1	79903541	SOCKET, 5A RELAY
11	1	79903540	RELAY, 4-POLE 5 AMP
10	2	79850400	FUSE, 15AMP
9	1	79804500	PLUG, 12V DC
8	1	75875850	HARNESS, MAIN POWER COUNTER
7	3	75823600	RELAY
6	2	62017800	SCREW, FLAT HD 8-32 X 3/8
5	2	61021600	NUT, 8-32
4	4	44294100	JUMPER WIRE PIGGYBACK
3	10	03850100	NUT, HEX KEP 10-32
2	10	02823800	SCREW, MACHINE 10-32 X 3/8
1	10	01588200	WASHER, FLAT #10 SAE
ITEM	QTY	PART NUMBER	DESCRIPTION

79953600 - Control Box Assembly

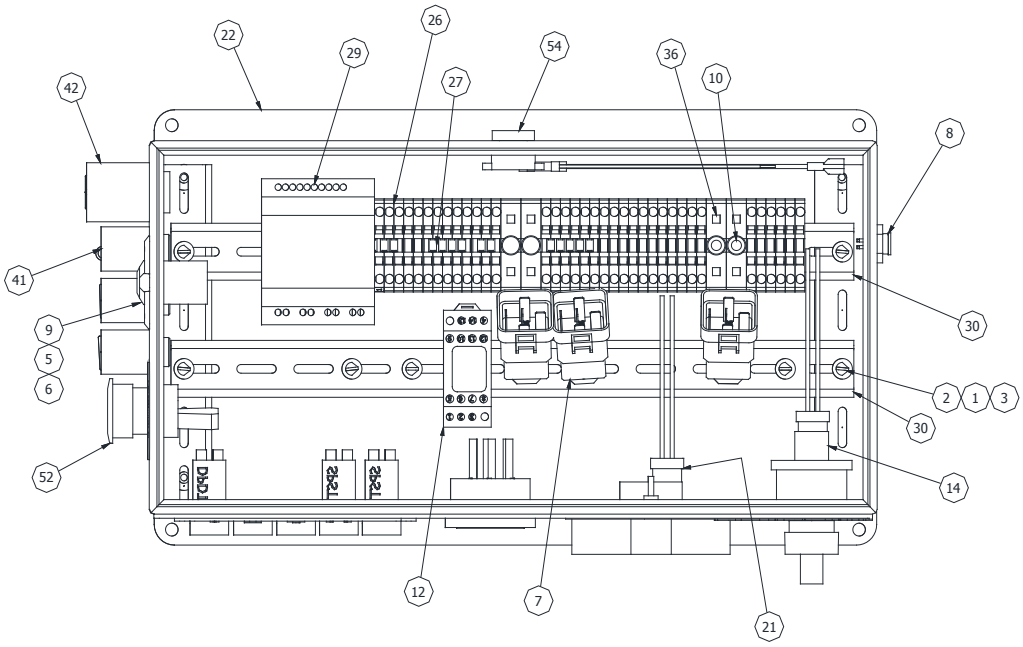

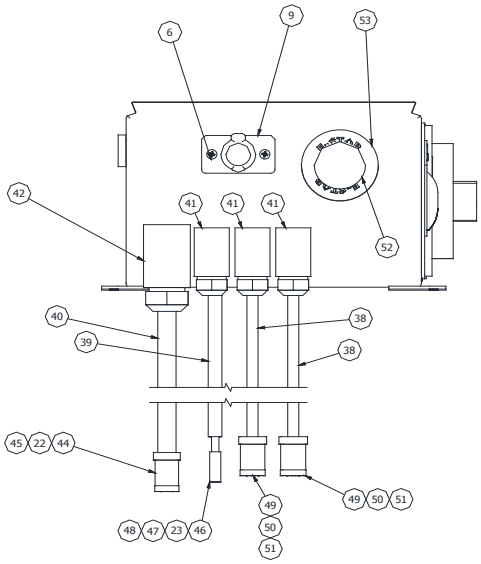

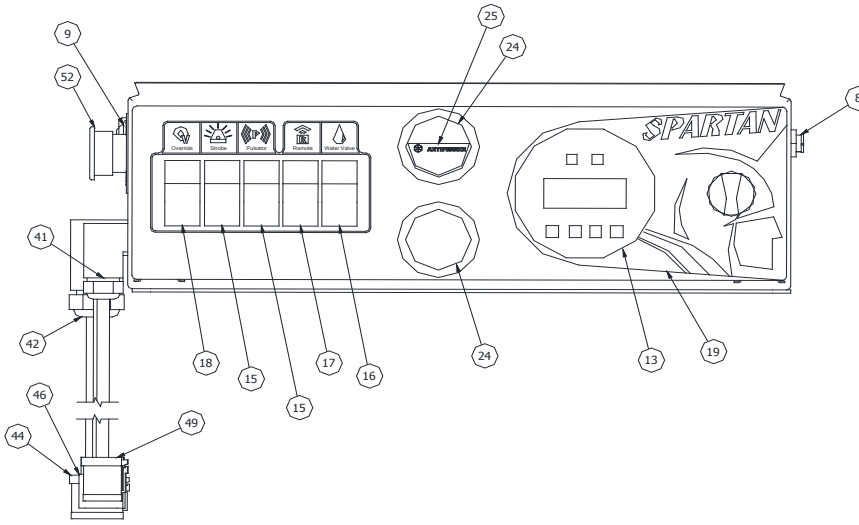

Warrior
Control Panel

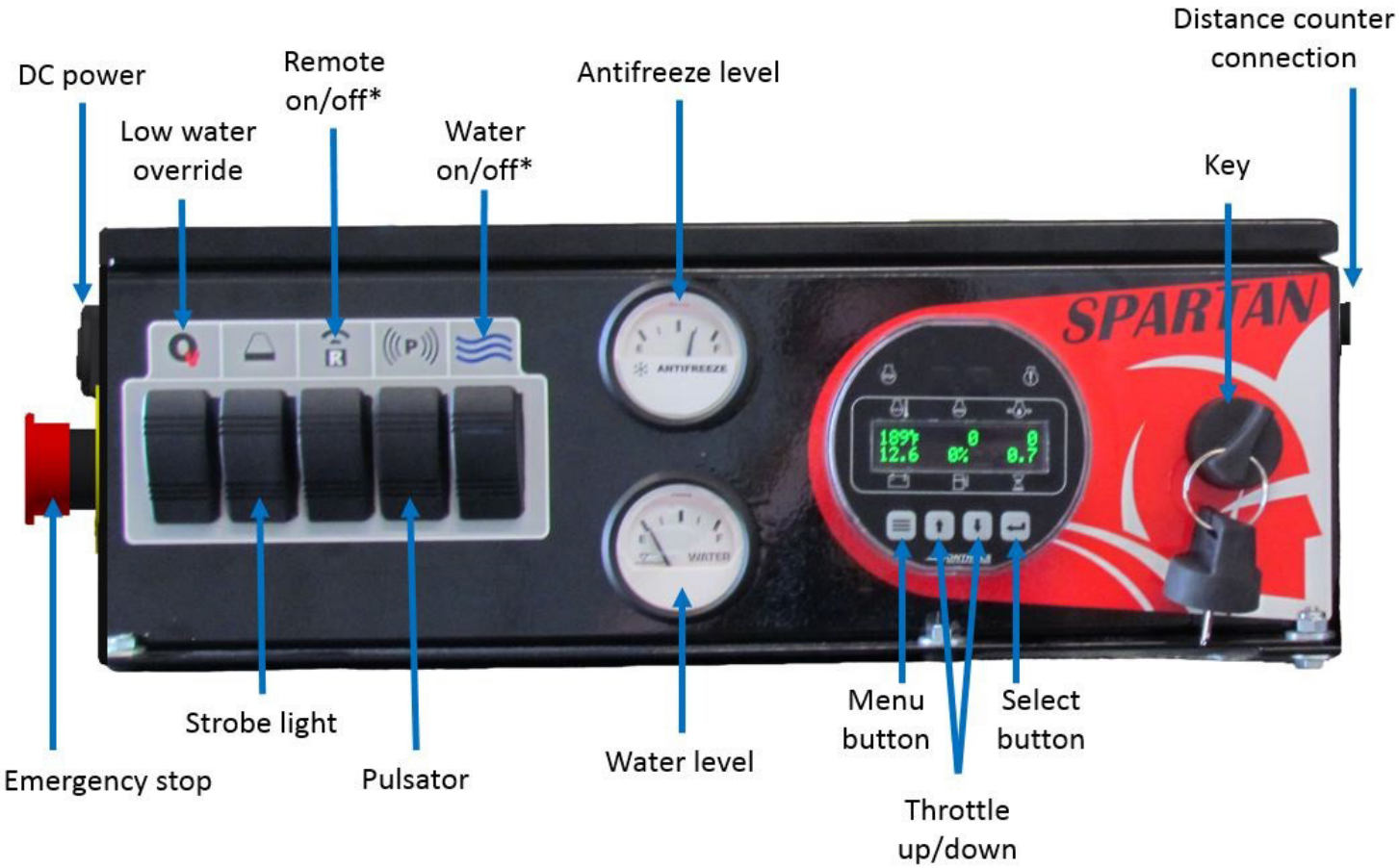

* If your jetter is equipped with the optional remote control.

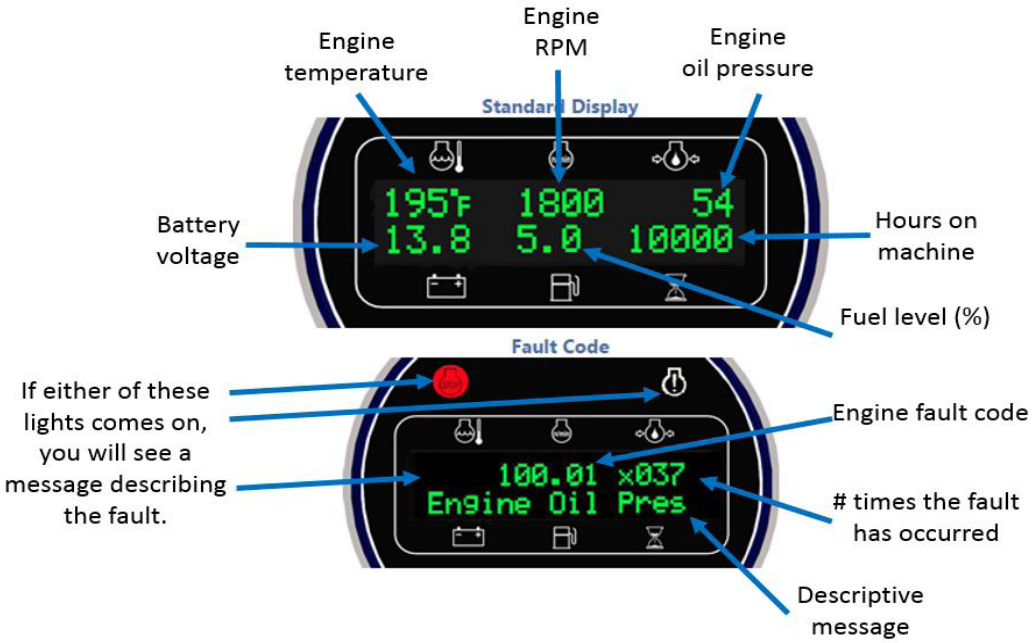

Final Wiring Schematic
Terminal Block - 79944700

ENGINE CONNECTIONS	E-STOP CONNECTOR	A - FUSED KILL SWITCHED POWER	1	TERM 30 - RELAY #2 (WATER LEVEL) 51
		B - SWITCHED POWER	2	NOT USED 52
		C - FUSED UNSWITCHED POWER	3	ENGINE KILL SWITCH PIN 1 53
	KEYSWITCH CONNECTOR	S1-FUSED KILL SWITCHED POWER	4	ENGINE KEYSWITCH PIN 1 54
		S2-STARTER RELAY SOLENOID	5	ENGINE KEYSWITCH PIN 2 55
		S3-ALTERNATOR IGNITION	6	ENGINE KEYSWITCH PIN 3 56
		S4-SWITCHED POWER	7	JUMPER TO TERMINAL 25 (SWT POW) 57
		S5-SWITCHED POWER	8	JUMPER TO TERMINAL 75 (SWT POW) 58
		S6-FUSED KILL SWITCHED POWER	9	ENGINE KEYSWITCH PIN 6 59
	DISPLAY CONNECTOR	D1-SWITCHED POWER	10	ENG DISPLAY CNNCT A - PIN 1 60
		D2-CAN HIGH (J1939)	11	ENG DISPLAY CNNCT A - PIN 2 61
		D3-CAN LOW (J1939)	12	ENG DISPLAY CNNCT A - PIN 3 62
		D6-SINGLE POINT GROUND	13	ENG DISPLAY CNNCT A - PIN 6 63
		NOT USED	14	NOT USED 64
	SENSOR BLOCK	WATER LEVEL SENDER (+)	15	WATER LEVEL GAUGE "S" TERMINAL 65
		ANTIFREEZE LEVEL SENDER (+)	16	ANTIFREEZE GAUGE "S" TERMINAL 66
		FUEL LEVEL SENSOR (+)	17	DISPLAY CNNCT A - PIN 5 67
		LIQ LEVEL SENSOR (+)	18	TERM 86, RELAY #2 (WATER LEVEL) 68
		PULSATOR POWER (+)	19	TERM 87, RELAY #3 (PULSATOR) 69
	SWITCHED POWER	ENGINE KEYSWITCH PIN 4	20	ENGINE KEYSWITCH PIN 5 70
		TERM 86, RELAY #1 (REMOTE WATER)	21	NOT USED 71
		SMART RELAY (L1/Q1/Q2)	22	72
		NOT USED	23	TERM 85, RELAY #3 (PULSATOR) 73
		4PDT RELAY (PIN 12)	24	WATER LEVEL GAUGE - "I" TERMINAL 74
		JUMPER TO 57 (FUSE)	25	JUMPER TO TERMINAL 58 (FUSE) 75
	BATTERY POWER	JUMPER TO 29	26	15 AMP 76 CIGAR LIGHTER (+)
		JUMPER TO 28	27	15 AMP 77 ROCKER #2 - STROBE (SPST)
		JUMPER TO 27	28	JETTER COUNTER (PIN 1) 78
		JUMPER TO 26	29	ROCKER #3 - REMOTE (GREEN SPST) 79
		TO BATTERY POSITIVE	30	ROCKER #1 - OVERIDE LW (COM) 80
	GROUND BLOCK 2	TO BATTERY GROUND	31	NOT USED 81
		CIGAR LIGHTER	32	NOT USED 82
		ANTIFREEZE GAUGE "G" TERMINAL	33	WATER LEVEL GAUGE (G) 83
		4PDT RELAY "NC" TERMINAL	34	REMOTE CONNECTOR (PIN 7) 84
		TO GND CONNECTOR (79944820)	35	NOT USED 85
	GROUND BLOCK 1	TO BATTERY GROUND	36	JETTER COUNTER (PIN 2) 86
		SMART RELAY PIN M	37	SMART RELAY PIN Q4, PIN 1 87
		MANUAL CLUTCH Q1-2 (GND)	38	MANUAL CLUTCH Q2-2 (GND) 88
		NOT USED	39	NOT USED 89
		NOT USED	40	NOT USED 90
	REMOTE CONNECTOR	7-PIN CONN (PIN 4)	41	DISP CONN B - PIN 5 91
		7-PIN CONN (PIN 3)	42	DISP CONN B - PIN 2 92
		7-PIN CONN (PIN 2)	43	TERM 85, RELAY #1 (REMOTE WATER) 93
		7-PIN CONN (PIN 1)	44	4PDT RELAY PIN 13 94
		7-PIN CONN (PIN 6)	45	TERM 86, RELAY #2 (WATER LEVEL) 95
		7-PIN CONN (PIN 5)	46	TERM 86, RELAY 3 (PULSATOR) 96

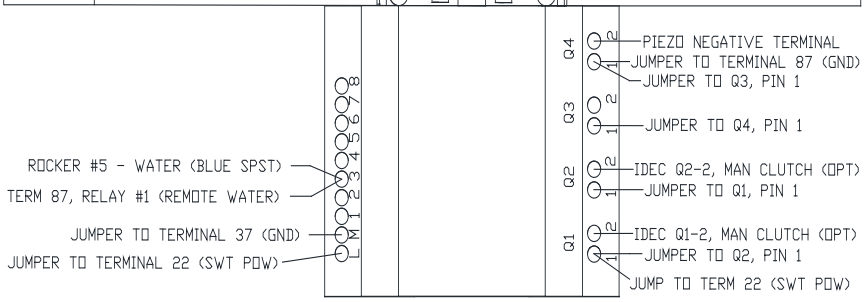

Wiring Harness
79953300

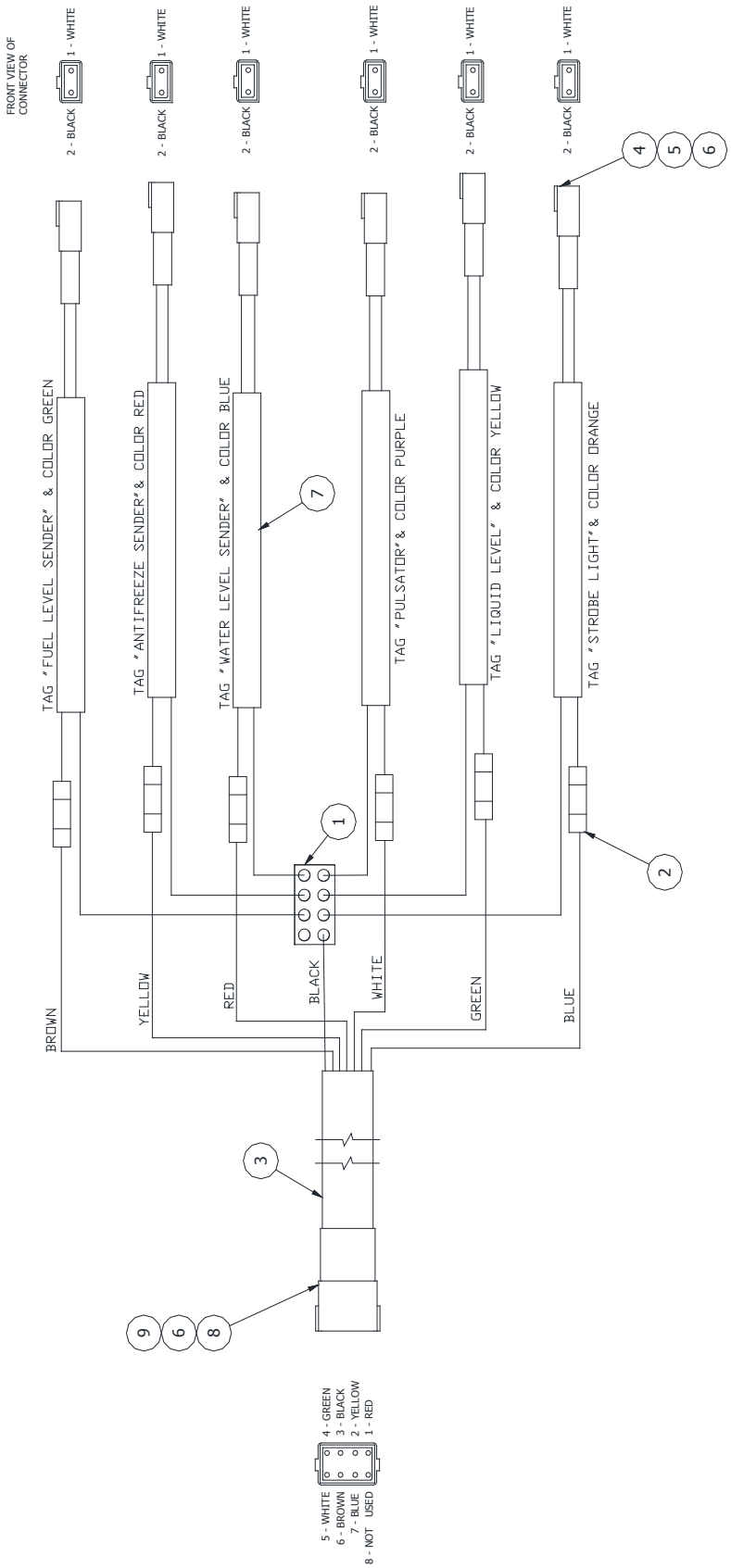

ITEM	QTY	PART NUMBER	DESCRIPTION
9	1	79953420	WEDGE, RECEPTACLE 8WAY
8	1	79953410	CONNECTOR, 8WAY GREY RECEPTACLE
7	576"	79953360	SERVICE CORD, EP 300V 18/2
6	19	79953350	CONTACT, PIN 16-18
5	6	79953340	WEDGE, RECEPTACLE 2WAY
4	6	79953330	CONNECTOR, 2WAY GREY RECEPTACLE
3	204"	79953320	TRAILER CABLE, PVC 18/7
2	6	79953310	CONNECTOR, BUTT 20-18 GA RED
1	1	79944820	CONNECTOR-PUSH-ON 6 WIRE

Warrior Wiring Schematic
Control System 79944700

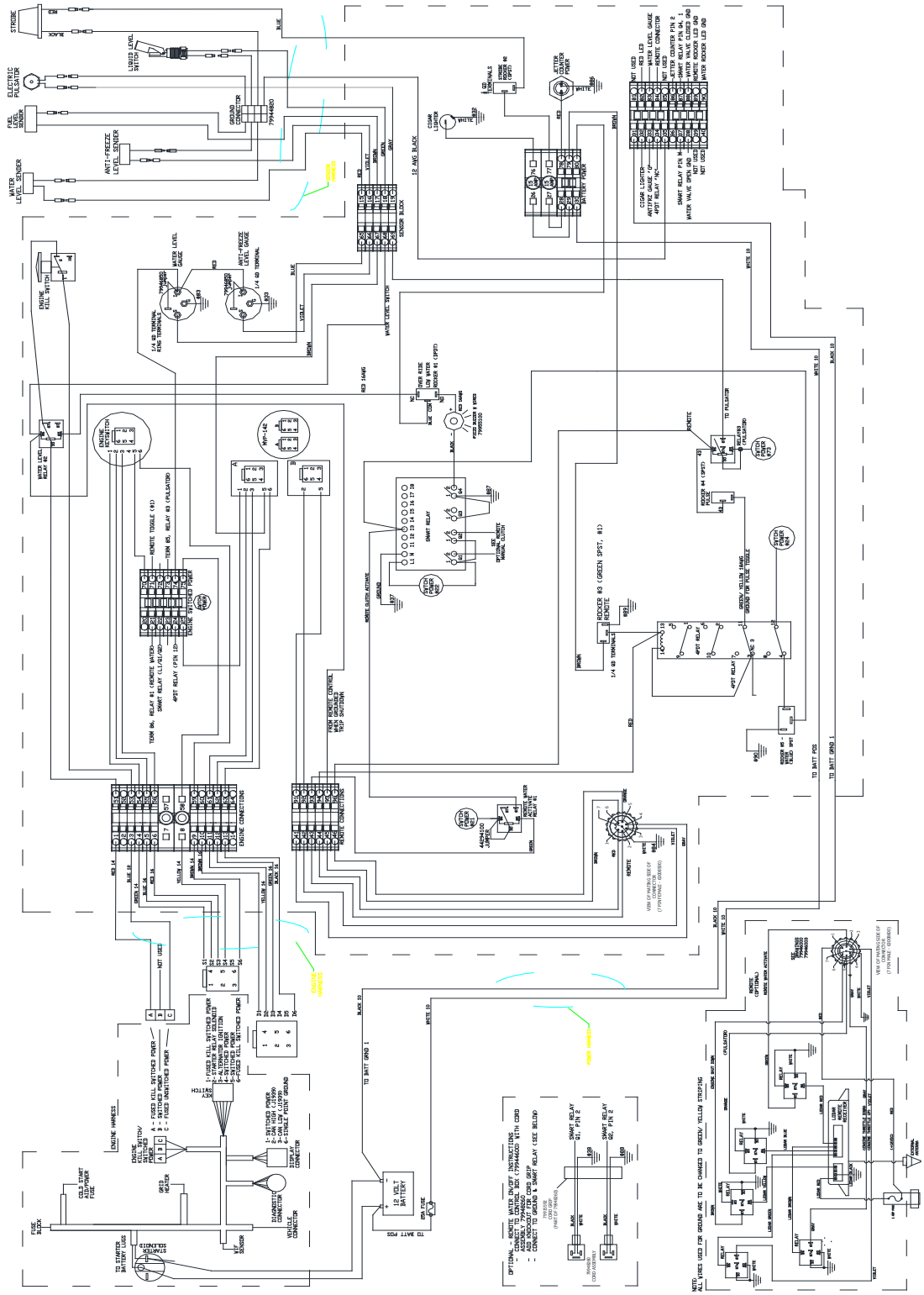

Wiring Schematic
Remote Control - 79944700

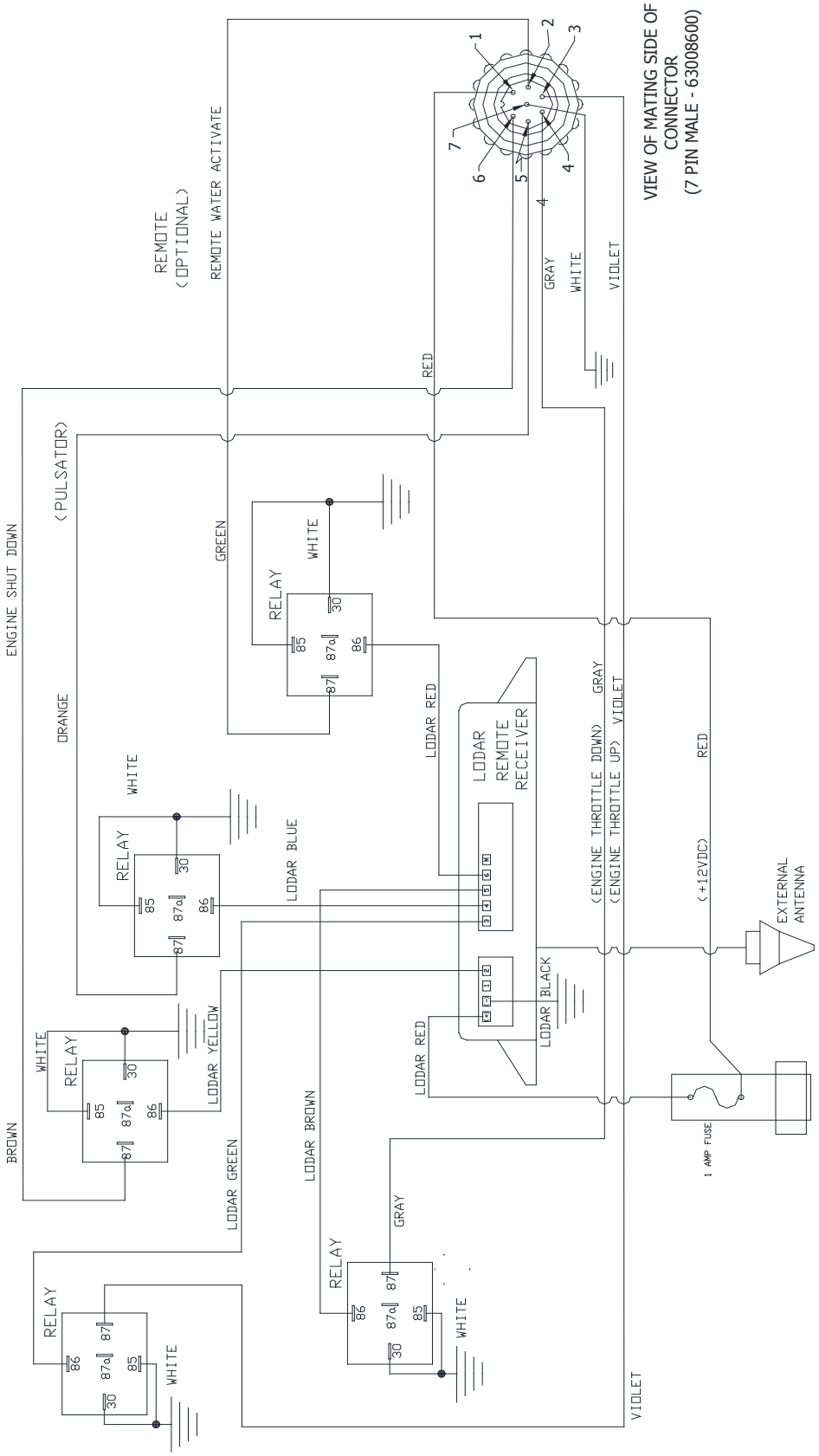

Wiring Harness T4 Remote
79953400

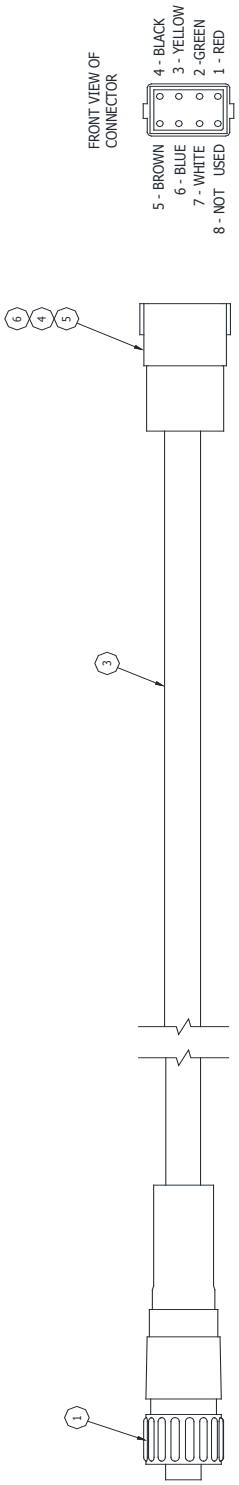

ITEM	QTY	PART NUMBER	DESCRIPTION
6	1	79953420	WEDGE, RECEPTACLE 8WAY DEUTSCH
5	1	79953410	CONNECTOR, 8WAY GREY RECEPTACLE
4	7	79953350	CONTACT, PIN 16-18 DEUTSCH
3	216"	79953320	TRAILER CABLE, PVC 18/7
2	1	79944400	HEAT SHRINK TUBING 1/2" ID BLACK
1	1	63008500	CONNECTOR, FEMALE 7 PIN

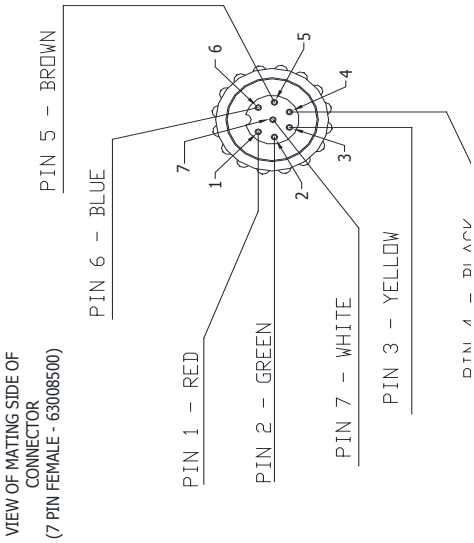

Wiring Harness T4
Engine Control 79953500

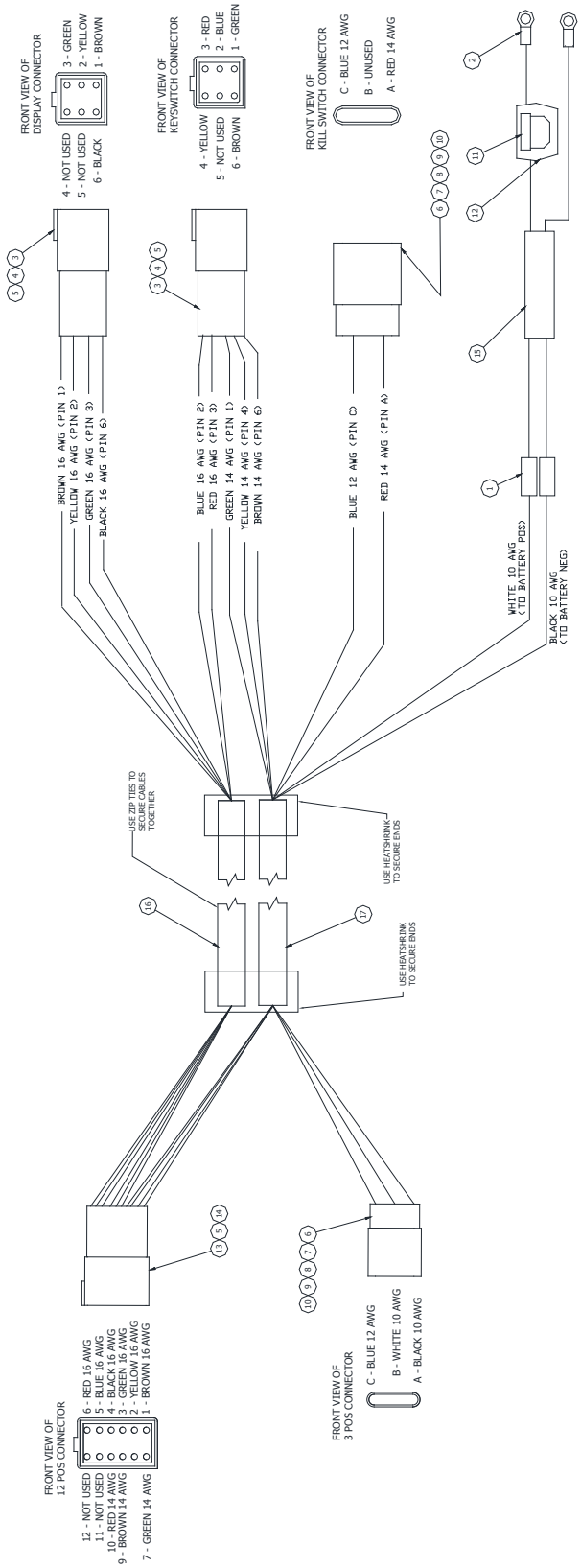

ITEM	QTY	PART NUMBER	DESCRIPTION
17	294"	79953550	TRAILER CABLE, PVC 14-12-10 GA
16	246"	79953540	TRAILER CABLE, PVC 16/6
15	1	79953530	SERVICE CORD, EP 300V 18/2
14	1	79953520	WEDGE, RECEPTACLE 12WAY
13	1	79953510	CONNECTOR, 12WAY GREY RECEPTACLE
12	1	79944970	HOLDER, INLINE FUSE ATC
11	1	79944960	FUSE, 25 AMP ATC BLADE
10	5	79944854	SEAL, DELPHI 4.30-3.45 - BLUE
9	1	79944853	PLUG SEAL, DELPHI CONNECTOR
8	5	79944852	TERMINAL, DELPHI MALE 12-10 AWG
7	2	79944851	TPA CLIP, 3 POS MALE CONNECTOR
6	2	79944850	CONNECTOR, DELPHI 3POS MALE
5	19	79944832	CONTACT, PIN 14-16 DEUTSCH
4	2	79944831	WEDGE, RECEPTACLE 6WAY DEUTSCH
3	2	79944830	CONNECTOR, 6WAY GREY RECEPTACLE
2	2	77806800	RING TERMINAL 5/16 X 12 AWG
1	2	75858840	TERMINAL, BUTT SPLICE 10-12AWG

Wiring Harness Control Box
79953600

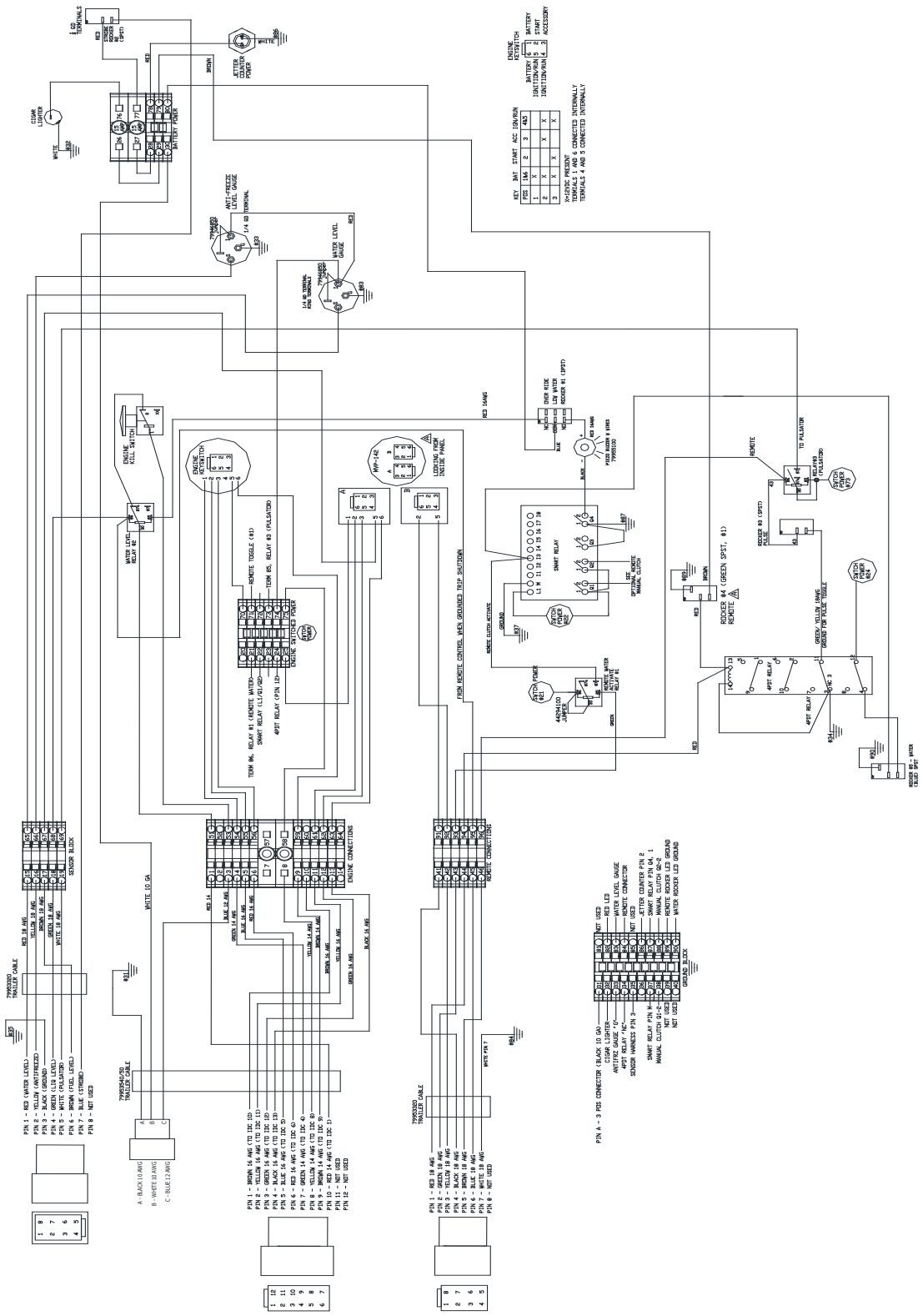

Trailer Wiring Harness - 79954200

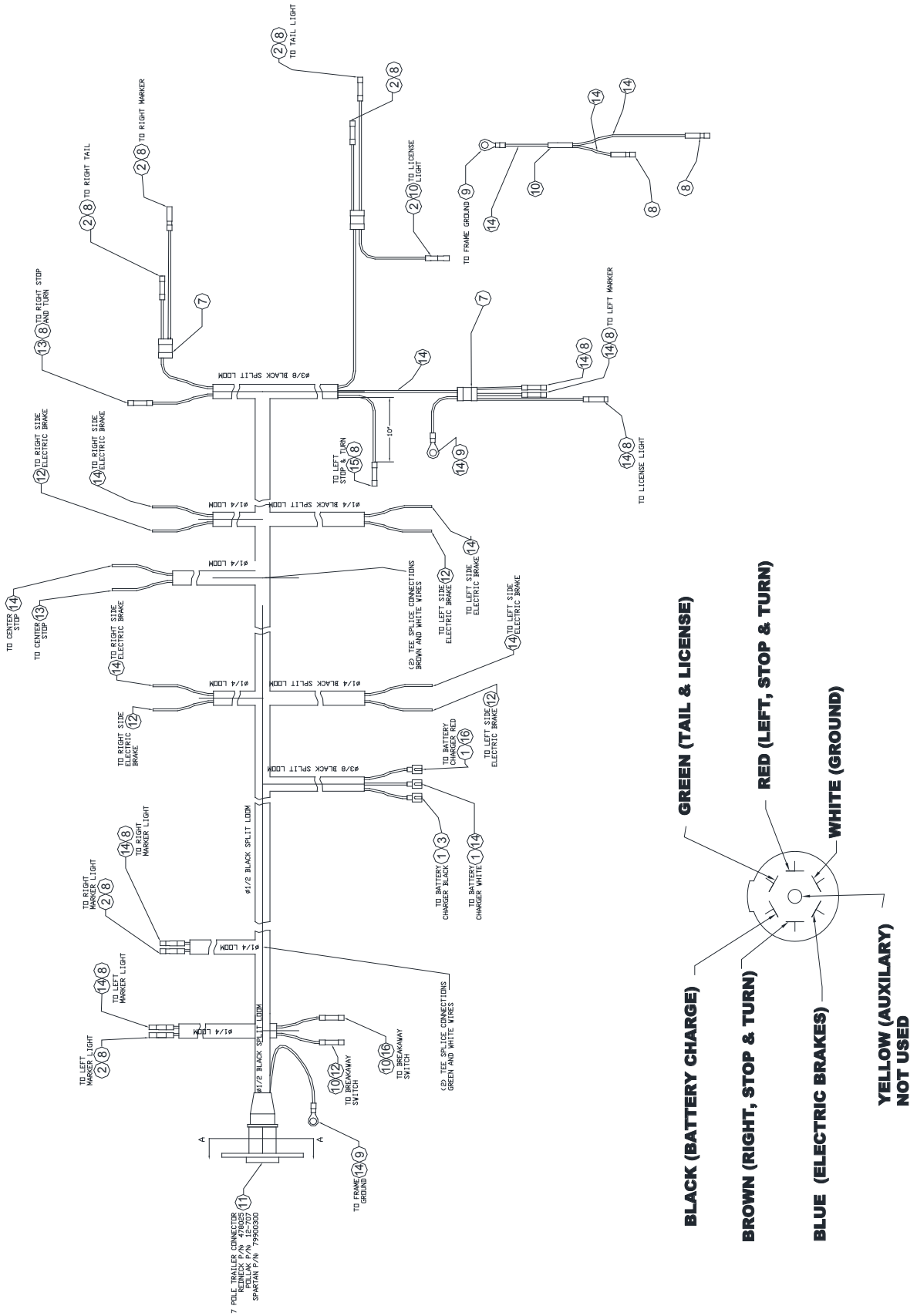

Trailer Wiring Diagram - 79954200

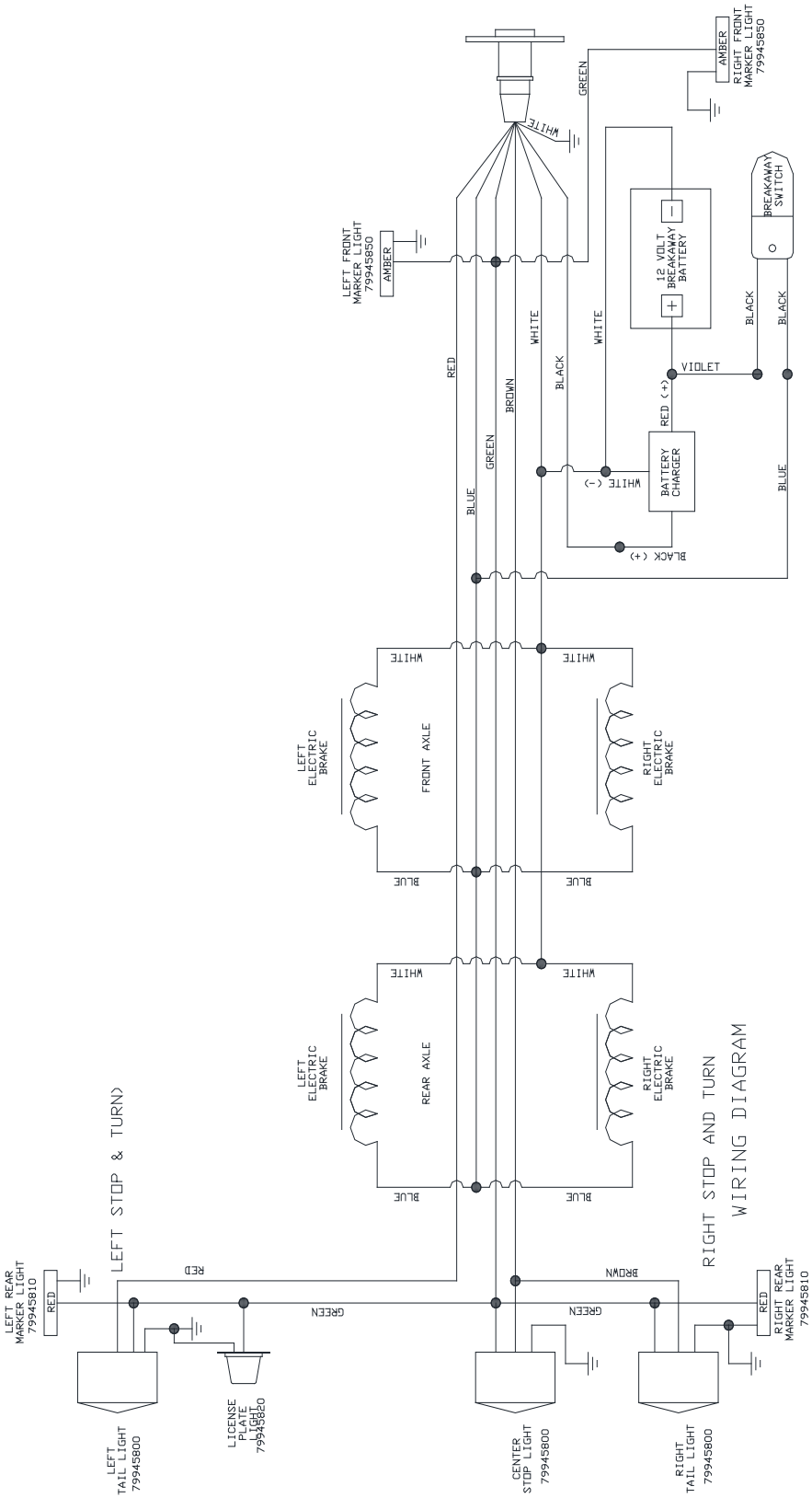

Note: Use a #2 consistency lithium base grease formulated from a high quality mineral oil with rust and oxidation inhibitors.

Engine PTO and clutch.

Grease every 100 hours (a).

Appy about one grease gun shot of an NLGI No. 2 Lithium Grease.

Clean, repack, and set main bearing endplay every 2 years or 4000 hours of operation. Inspect sealed for life pilot bearing for wear.

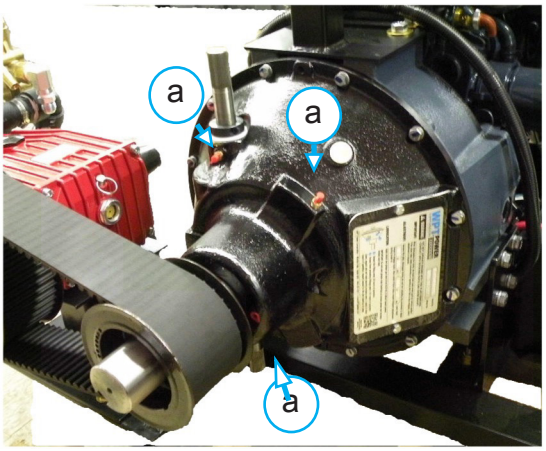

Fig. 20-1

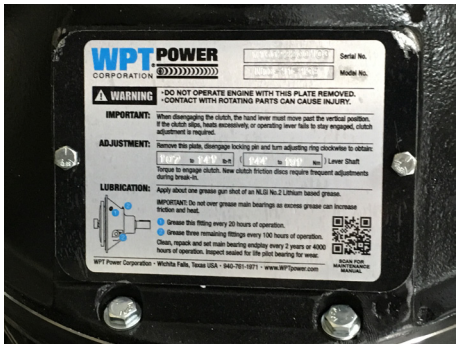

Fig. 20-4

High pressure reel

Oil chain every 200 hours (SAE 30 or heavier oil)

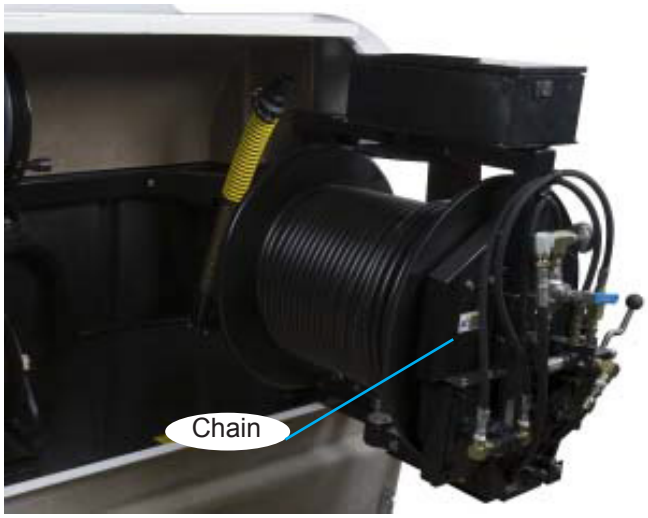

Fig. 20-2

Change hydraulic oil and filter every 500 hours.

Use Amoco - Rykon AW Oil 46.

Hydraulic Oil Filter: Spartan P/N 79807100.

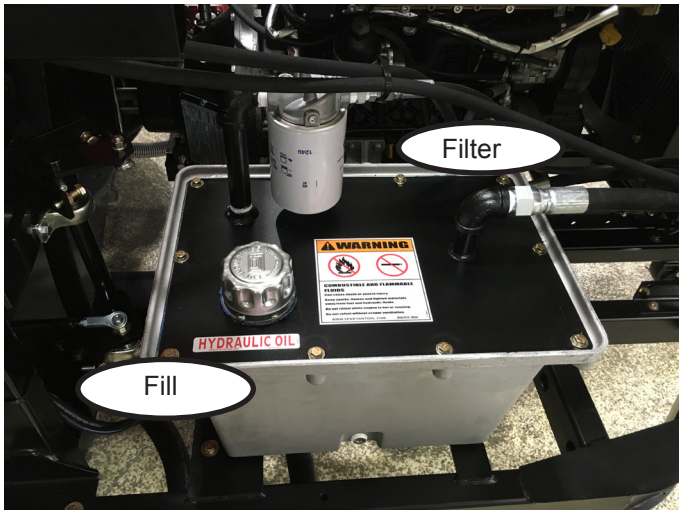

Fig. 20-3

Change pump oil after first 50 hours and every 500 hours thereafter. Use SAE 80 gear oil.

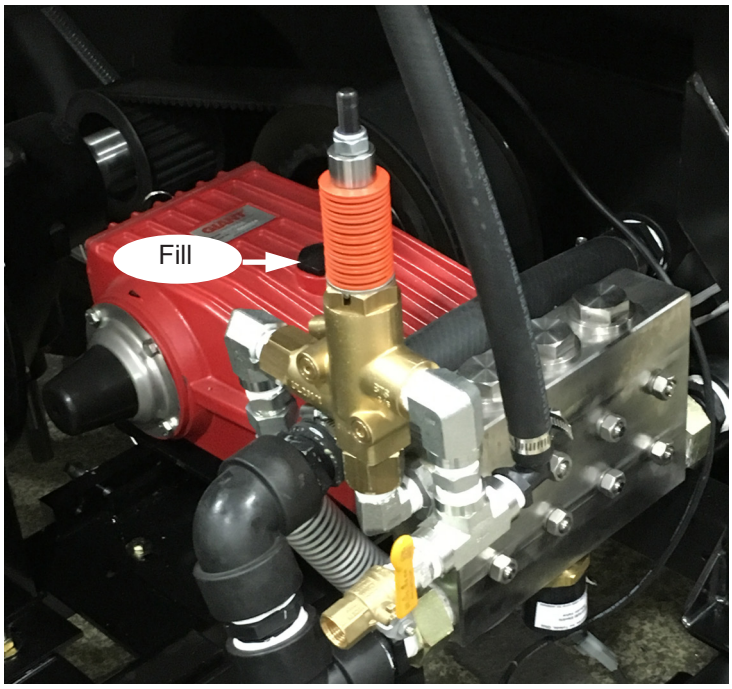

Fig. 21-1

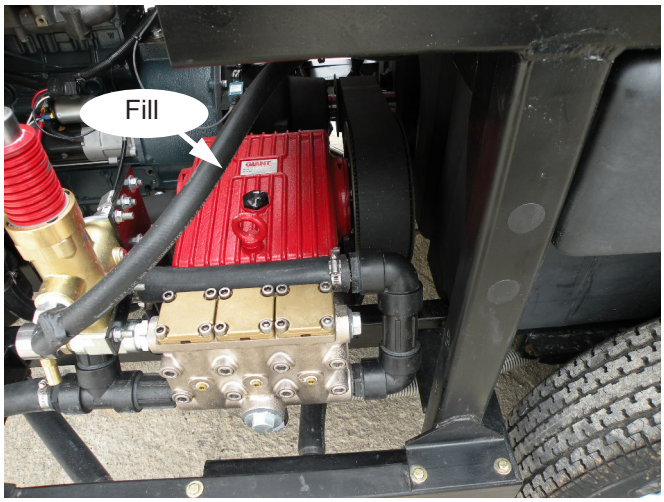

Fig. 21-2

High Flow Pump

Inlet Filter. Clean daily.

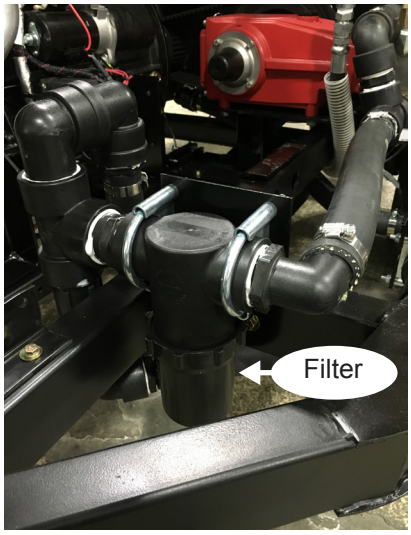

Fig. 21-3

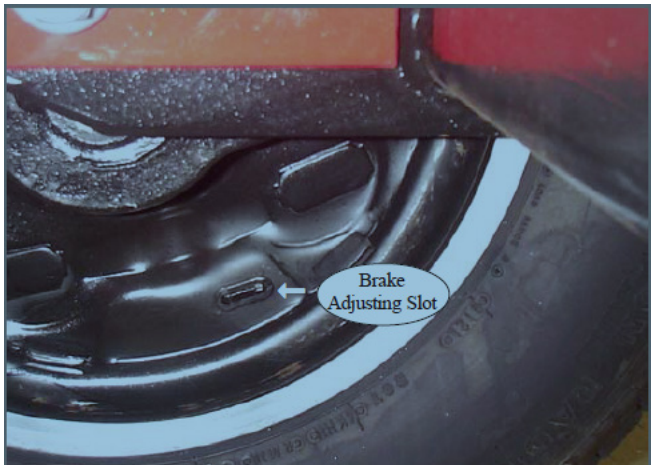

Fig. 22-1

Adjust brakes after the first 200 miles and at 3000 mile intervals thereafter, or as use and performance requires. For brake adjustment procedure refer to the Dexter Axle Service Manual

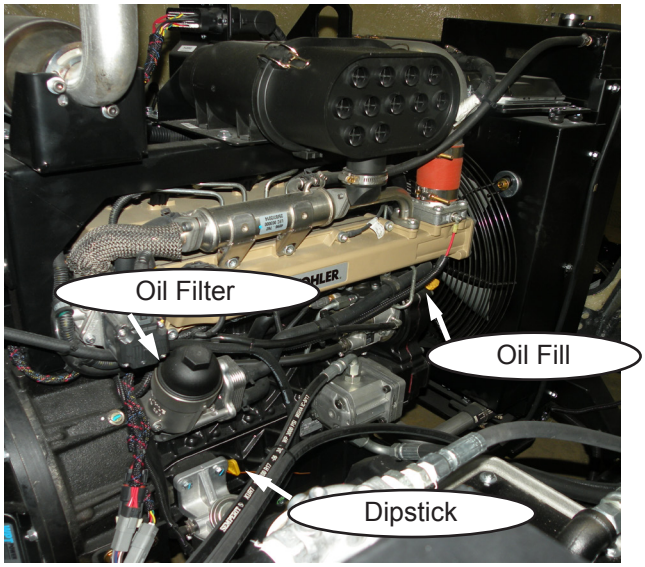

Fig. 22-2

Follow maintenance instructions in Kohler Diesel Engine Operator's Manual.

Note: Use the same type of diesel fuel as used in cars. (ASTM D975 reg. S 15) Keep fuel system clean.

- Use only Kohler approved filters, available at local Kohler diesel dealers:

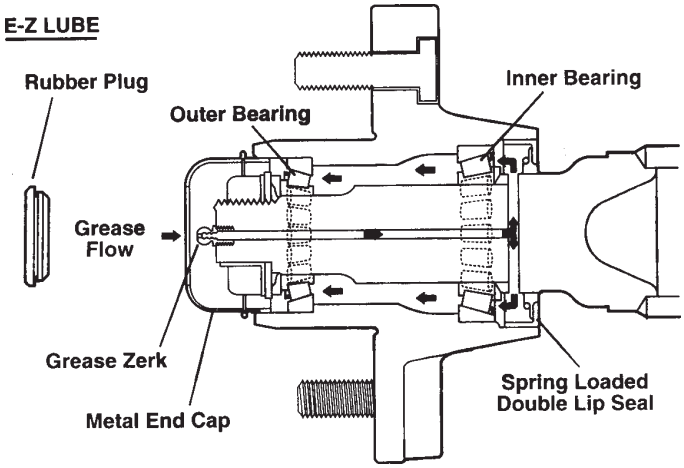

Fig. 22-3

Grease wheel bearings every 12000 miles or 12 months. Follow greasing procedure in the Dexter Axle Service Manual.

For additional maintenance information review the following section in the Dexter Axle Service Manual:

- Braking System - Electric
- Hubs/Drums/Bearings
- Wheels and Tires

Fig. 22-4

Check clutch engagement pressure:

Check clutch engagement force after the first 4 hours of engine operation. Then check again after another 4 hours. Then 8 hours after that. After the initial breaking period, check clutch engagement force periodically.

a. With clutch in the disengaged OFF position, remove actuator bolt from front clutch lever. See Fig. 23-1.

b. Using a torque wrench, 1-1/2" socket, and an extension (if needed), attach socket to clutch lever hex nut. See Fig. 23-2.

c. Check the engagement torque. The correct clutch engagement force is between 107-141 ft.-lbs. If the engagement force has decreased below lowest allowed setting specified, adjustment to the clutch needs to be made (refer to clutch adjustment procedure on page 26). If the clutch is properly adjusted, reattach clutch linkage by reversing step "a."

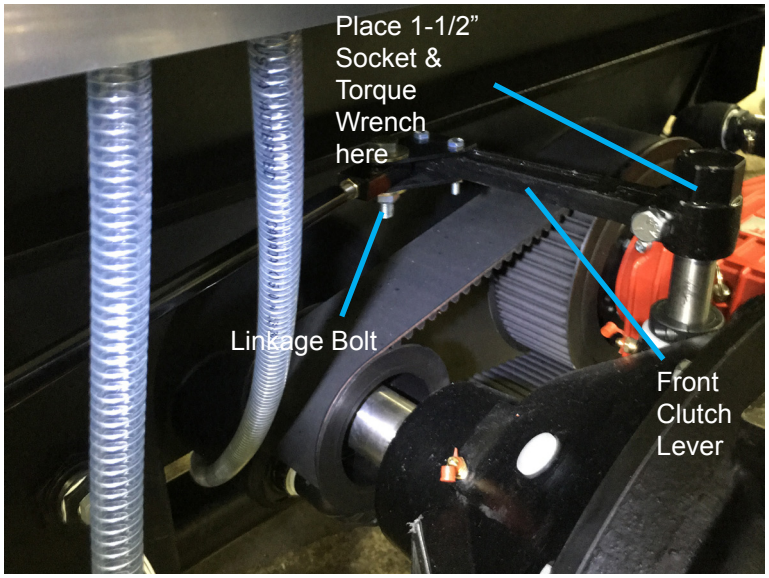

Fig. 23-1

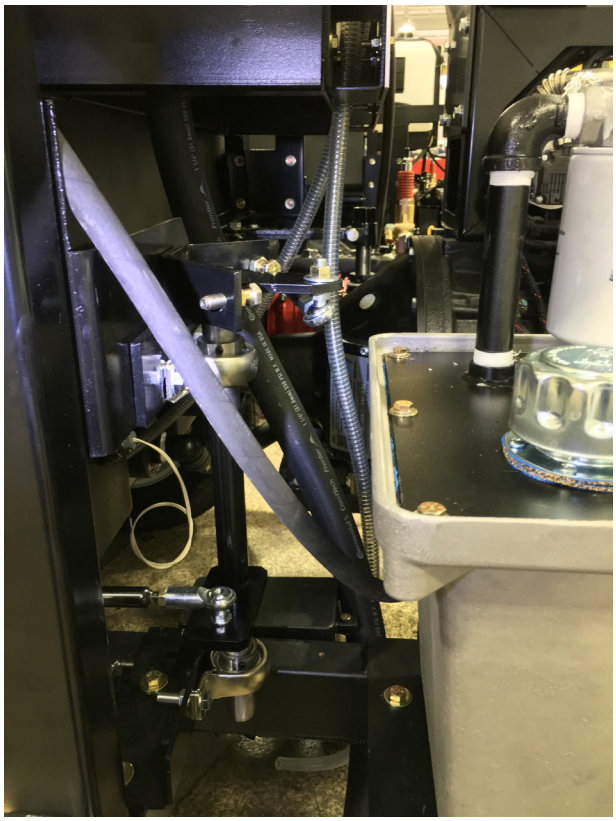

Fig. 23-2

Clutch Adjustment Procedure:

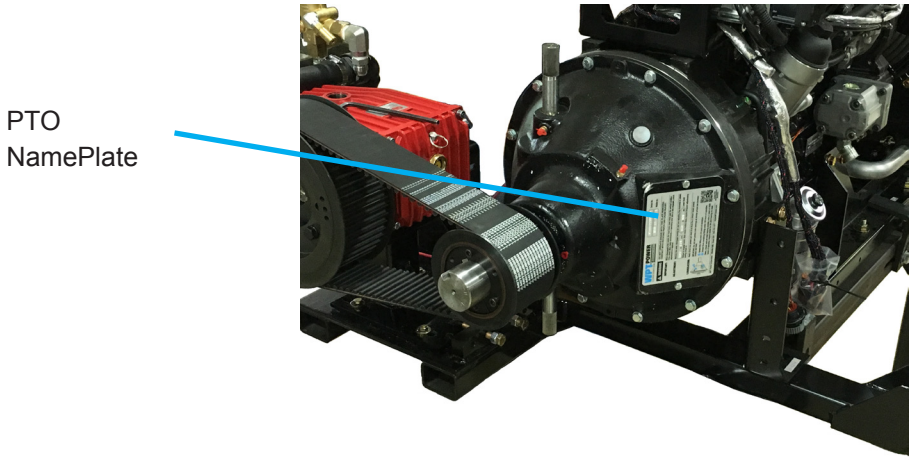

Fig. 24-1

a. Remove PTO nameplate and rotate the shaft until you can access the adjusting ring lock.

b. Remove the lock bolt and adjustment lock.

c. Rotate the adjusting ring counter-clockwise to tighten the clutch. Rotating the adjusting ring clockwise will loosen the clutch. Adjust to obtain the proper handle engagement force.

d. Recheck the engagement force using the torque wrench. Once clutch is properly adjusted, reposition the locking finger in a slot and tighten the adjustment lock.

e . Secure PTO nameplate onto clutch.

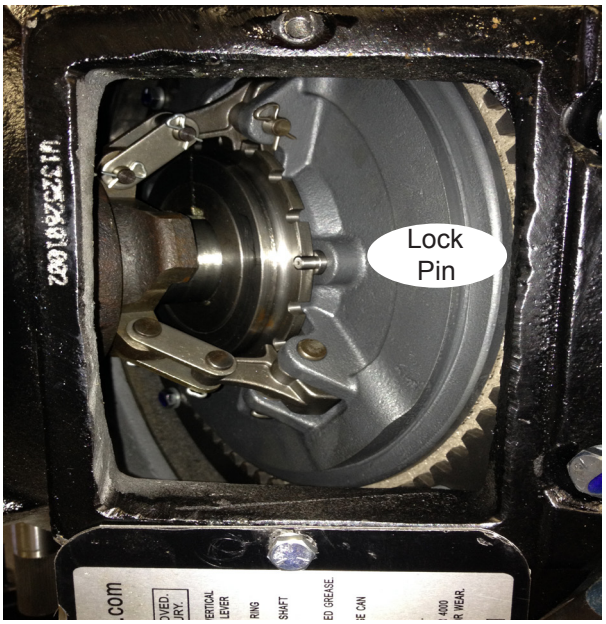

Fig. 24-2

Pump System Malfunction Chart

SYMPTOM	CAUSES	REMEDIES
The Pressure and/or the Delivery Drops	Worn Packing Seals Broken Valve Spring Belt Slippage Worn or Damaged Nozzle Fouled Discharge Valve Fouled Inlet Strainer Worn or Damaged Hose Worn or Plugged Relief Valve on Pump Cavitation Unloader	Replace Packing Seals Replace Spring Tighten or Replace Belt Replace Nozzle Clean Valve Assembly Clean Strainer Repair/Replace Hose Clean, Reset, Replace Worn Parts Check Suction Lines on Inlet of Pump for Restrictions Check for Proper Operation
Water in Crankcase	High Humidity Worn Seals	Reduce Oil Change Interval Replace Seals
Noisy Operation	Worn bearings Cavitation	Replace Bearings, Refill Crankcase Oil with Recommended Lubricant Check Inlet Lines for Restrictions and/or Proper Sizing
Rough/Pulsating Operation with Pressure Drop	Worn Packing Inlet Restriction Accumulator Pressure Unloader Cavitation	Replace Packing Check System for Stoppage, Air Leaks, Correctly Sized Inlet Plumbing to Pump Recharge/Replace Accumulator Check for Proper Operation Check Inlet Lines for Restrictions and/or Proper Size
Pressure Drop at Gun	Restricted Discharge Plumbing	Re-Size Discharge Plumbing to Flow Rate of Pump
Excessive Leakage	Worn Plungers Worn Packing/Seals Excessive Vacuum Cracked Plungers Inlet Pressure too High	Replace Plungers Adjust or Replace Packing Seals Reduce Suction Vacuum Replace Plungers Reduce Inlet Pressure
High Crankcase Temperature	Wrong Grade of Oil Improper Amount of Oil in Crankcase	Giant Oil is Recommended Adjust Oil Level to Proper Amount

Diesel Engine Filters and Capacities

ITEM	IDENTITY
OIL FILTER	ED 0021753090-S
OIL SUGGESTION	SHELL ROTELLA T6 FULL SYN
OIL CAPACITY	3.25 GALLONS
FUEL FILTER PRIMARY	ED 0021753180-S
AIR FILTER ELEMENTS PSD080020	MAIN: P600975 2ND: P608533
AIR FILTER SCREEN	500-02499
COOLANT SUGGESTION	JOHN DEERE COOL-GARD II
COOLANT CAPACITY	3.5 GALLONS
FAN V-BELT	ED 0024001450-S
FAN BELT SERPENTINE	ED 0024404860-S

Section 3
Features Specific to High Flow Warrior
Table of Contents

Specific to: HIGH FLOW WARRIOR

PARTS & ACCESSORIES SECTION

High-Flow Power Pack 79969000.. 63-69

High Flow Pump- 79965100.....70-71

Dump Valve Giant 22973CR - 79965605 72

Pump Parts List - 79965500 73

Pump Exploded View 74

High Flow Unloader - 79965600..... 75-76

High Flow Included & Optional Accessories.....77

High Flow Power Pack Assembly
79969000

ITEM	QTY	PART NUMBER	DESCRIPTION
1	8	00113700	SCREW, HX HD CAP1/4-20 X 3/4
2	2	00117500	SCREW, HEX HD 3/8-16 X 4
3	4	00137300	NUT, HEX 1/4-20
4	14	00162700	WASHER, FLAT 3/8
5	8	00165400	WASHER, LOCK SPLIT 1/4
6	2	00165800	WASHER, LOCK SPLIT 3/8
7	2	00778000	NUT, HEX 1/2-13
8	8	02825100	WASHER, FLAT 1/4 USS
9	1	04728200	SCREW, HEX HD 1/4-20 X 3/8
10	22	73826900	WASHER, FLAT 1/2 USS HIGH STRENGTH
11	1	73830900	CABLE, NEGATIVE BATTERY 60" LG
12	1	75815301	BOX, BATTERY
13	7	77738100	SCREW, CAP HX HD 3/8-16 X 1
14	9	77748000	NUT, STOVER LOCK 3/8-16 UNC
15	1	79846500	ADAPTER-10 O-RING/-8JIC
16	1	79846600	ADAPTER-12 O-RING/JIC45 DEG
17	1	79847800	BATTERY, DIESEL 875 CCA
18	1	79847900	CABLE, POSITIVE BATTERY 798
19	2	79908500	SCREW, HEX HD 1/2-13 X 3
20	7	79920141	NUT, HX GR8 1/2-13 STOVER
21	7	79920145	HEX HD BOLT 1/2-13 X 1-1/2 GR8
22	4	79920150	HEX HD BOLT 3/8-16 X 1-1/2 GR8
23	4	79920151	HEX NUT, 3/8-16 GRADE 8
24	1	79920261	BEARING, 1"IDX2"ODX1/8 DELRIN
25	1	79920262	COLLAR, 1" SHAFT 2 PIECE
26	1	79920330	CLAMP, EXHAUST 2-1/2
27	1	79920384	WELDMENT 2" EXHAUST 45 DEGREE
28	1	79920388	ELBOW, EXHAUST T4
29	2	79922290	PROTECTOR SET, BAT TERMINALS
30	1	79922330	SPROCKET, DRIVE 30 TOOTH 14MM X 85MM
31	1	79922350	BUSHING, QD-SK 2-1/4 BORE
32	1	79922355	KEY, STEP 1/2 X 5/8 SQ
33	1	79922370	BELT, DRIVE 1400 PTH 14M42
34	1	79925200	CLUTCH, WARRIOR (FURNISHED W/ 79925300)
35	1	79925210	SPACER WPT TO KOHLER (FURNISHED W/ 79925300)
36	1	79925300	ENGINE, DIESEL TIER 4
37	1	79926400	PUMP,HYD GEAR-TIER 4 ENGINE
38	1	79925400	WELDMENT,TIER 4 POWER PACK
39	1	79931900	WELDMENT, PUMP SUPPORT HF ULTIMATE
40	1	79965010	PLATE, UNLOADER SUPPORT BASE
41	1	79965020	ANGLE, UNLOADER SUPPORT VERT.
42	1	79965030	PLATE, UNLOADER SUPPORT UBOLT
43	2	79965040	U-BOLT, 3/8-16 X 2-3/4" ID
44	1	79965100	PUMP ASSEMBLY HIGH FLOW
45	4	79965630	SCREW, M14X35MM SOC CAP SS
46	1	79969100	WLDMNT, BATTERY TRAY T4
47	1	79925110	FUEL COOLER, ALUMINUM (prior to 3/15/2016)
48	4	02821200	NUT, NYLOCK JAM 1/4-20
164	1	75814700	STRAP, BATTERY HOLD DOWN

High Flow Power Pack Assembly
79969000

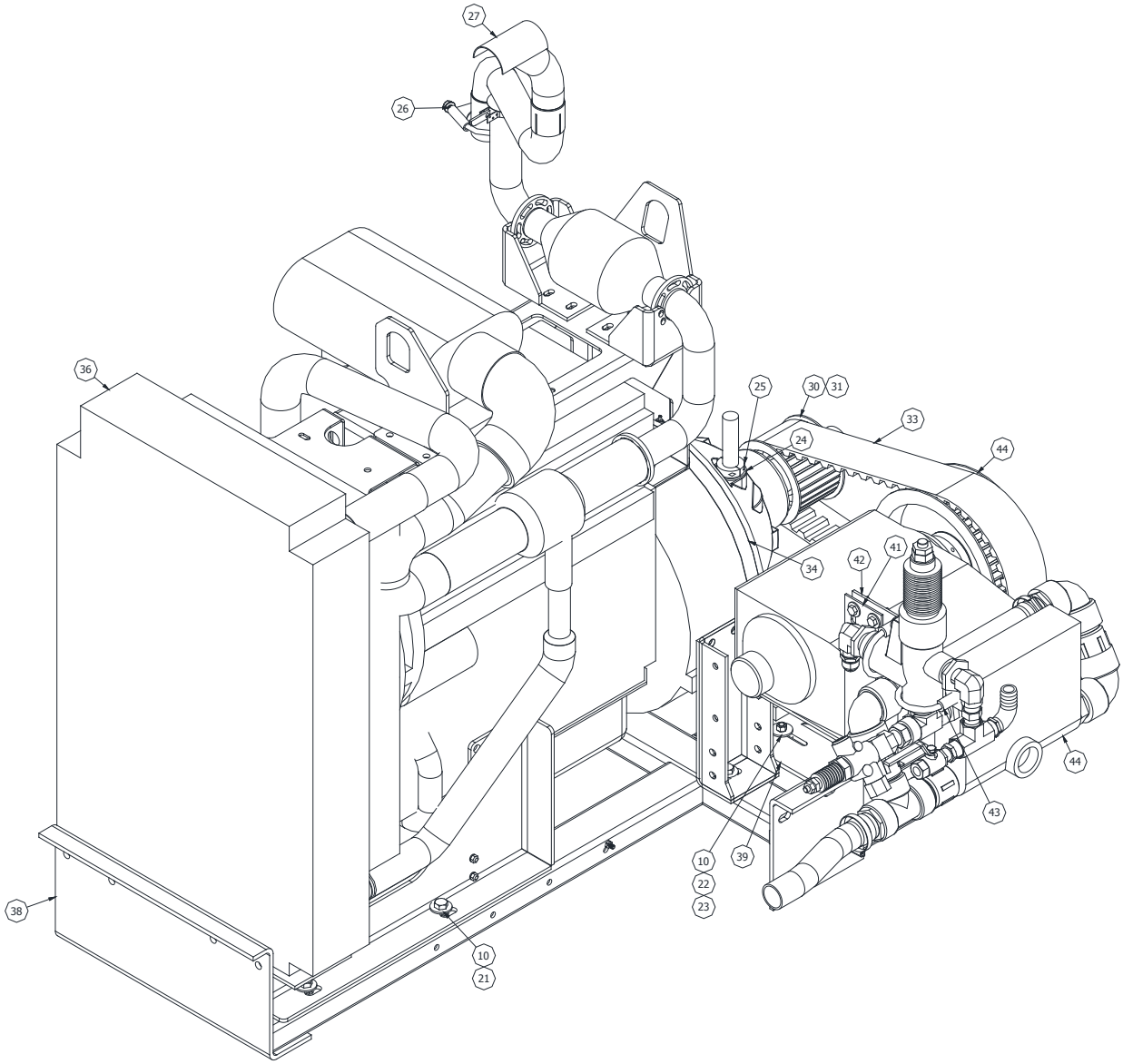

High Flow Power Pack Assembly
79969000

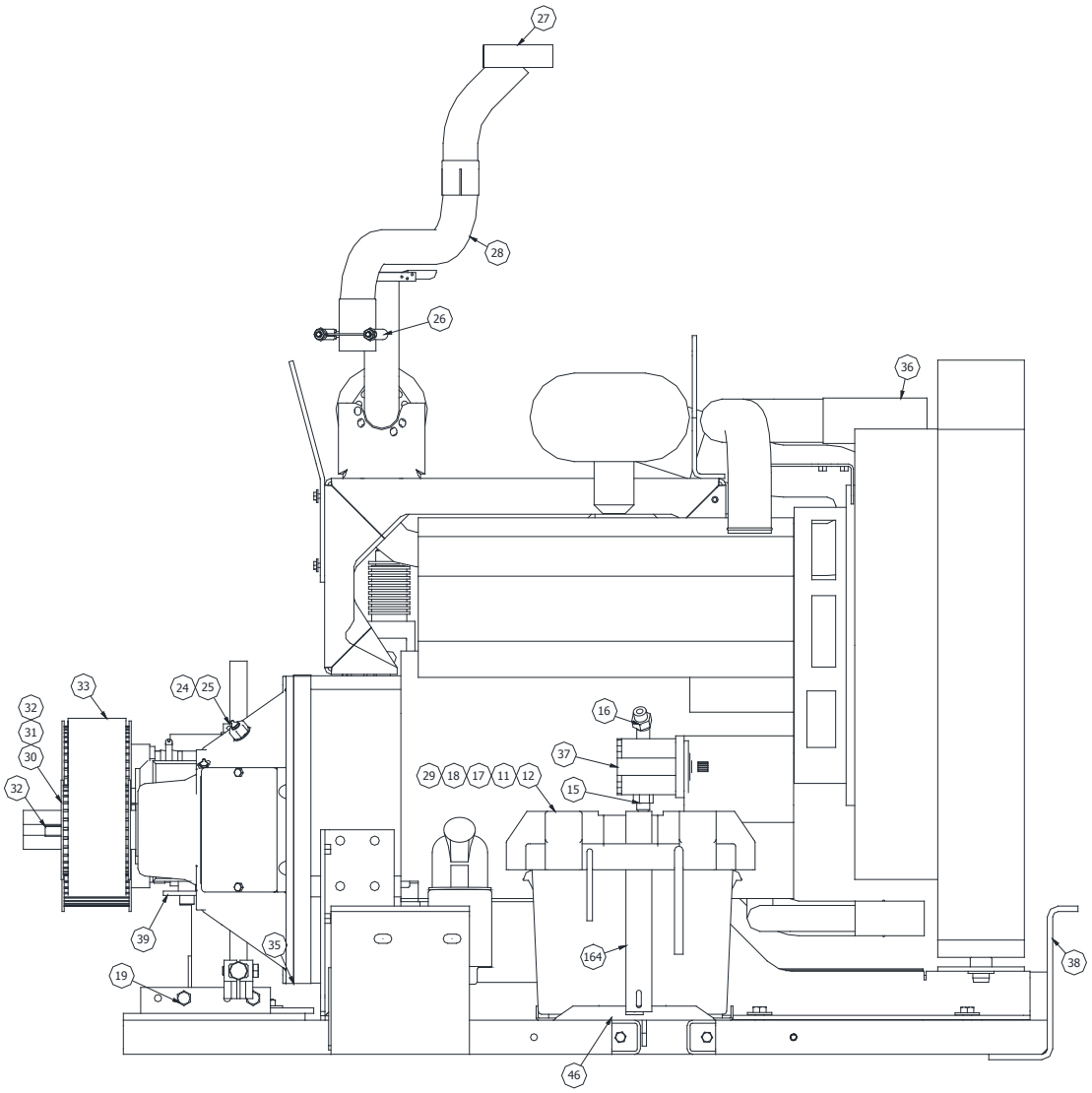

High Flow Power Pack Assembly
79969000

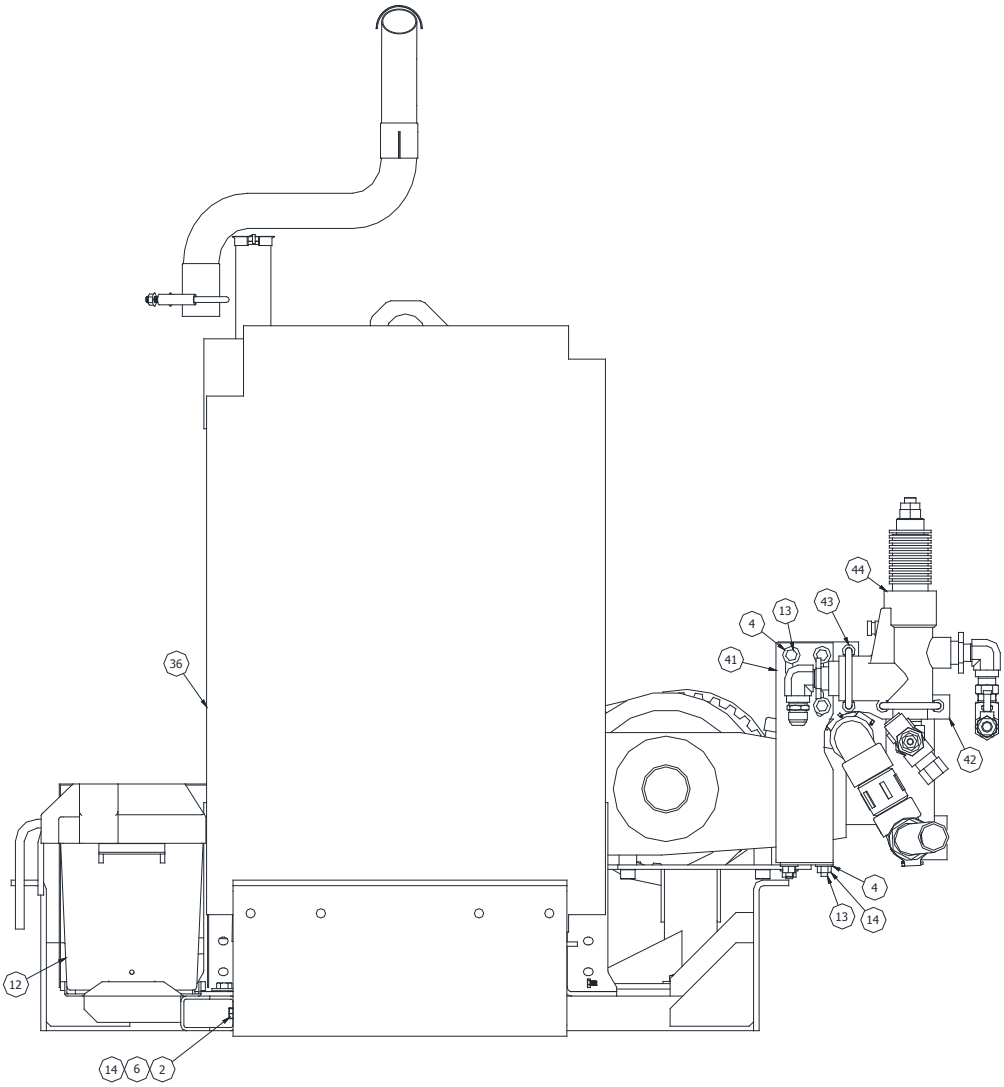

High Flow Power Pack Assembly
79969000

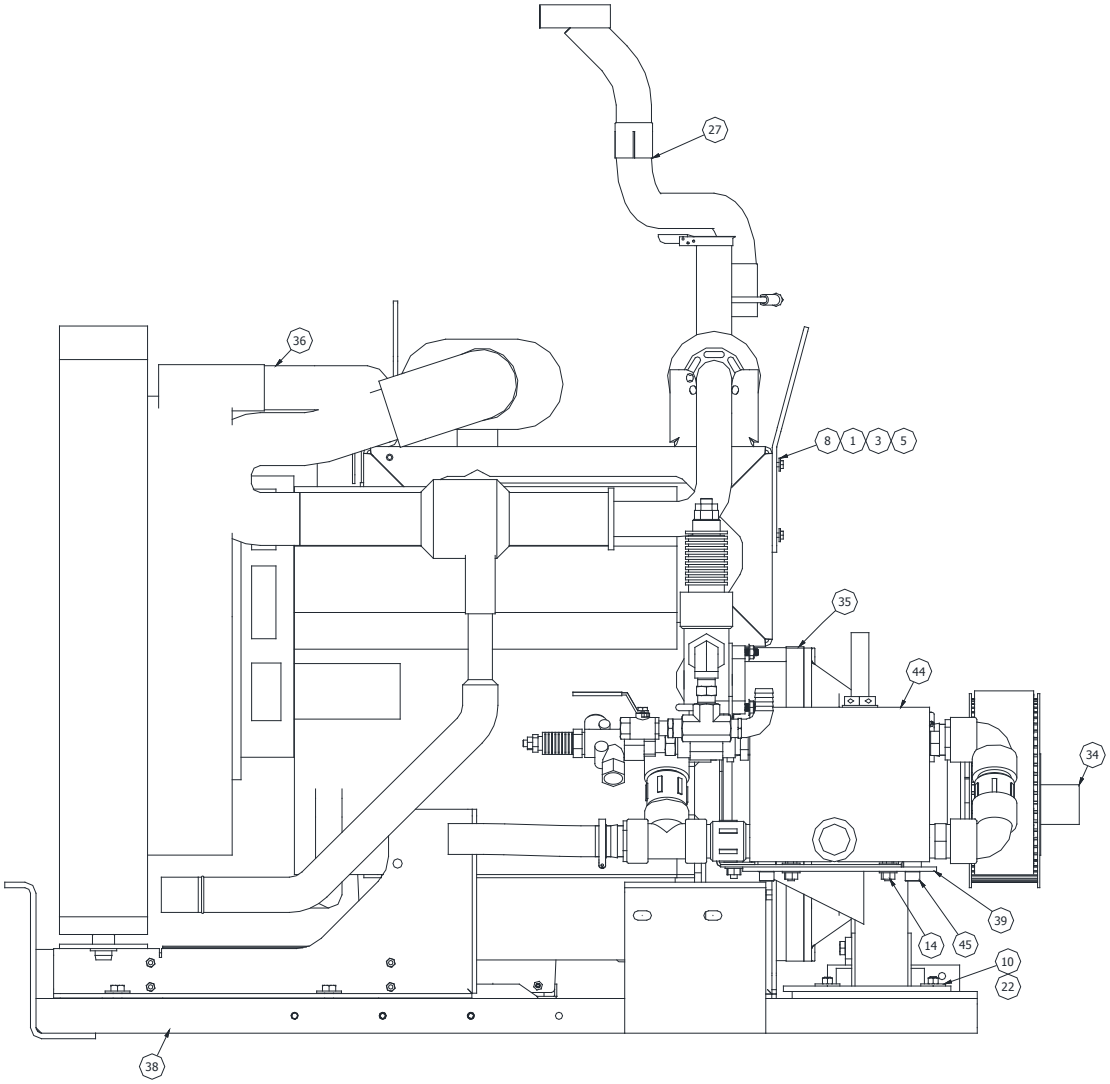

High Flow Power Pack Assembly
79969000

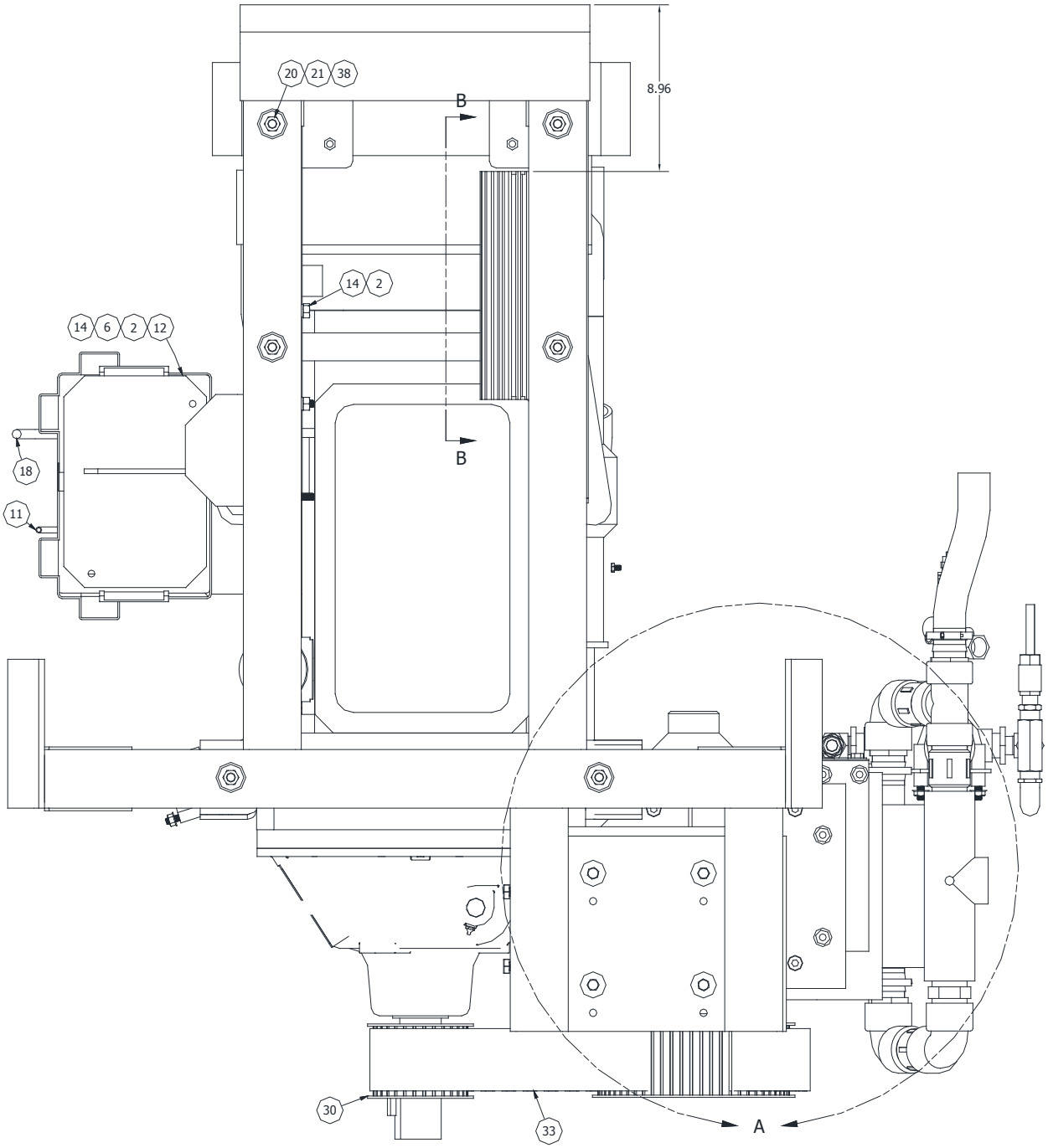

High Flow Power Pack Assembly
79969000

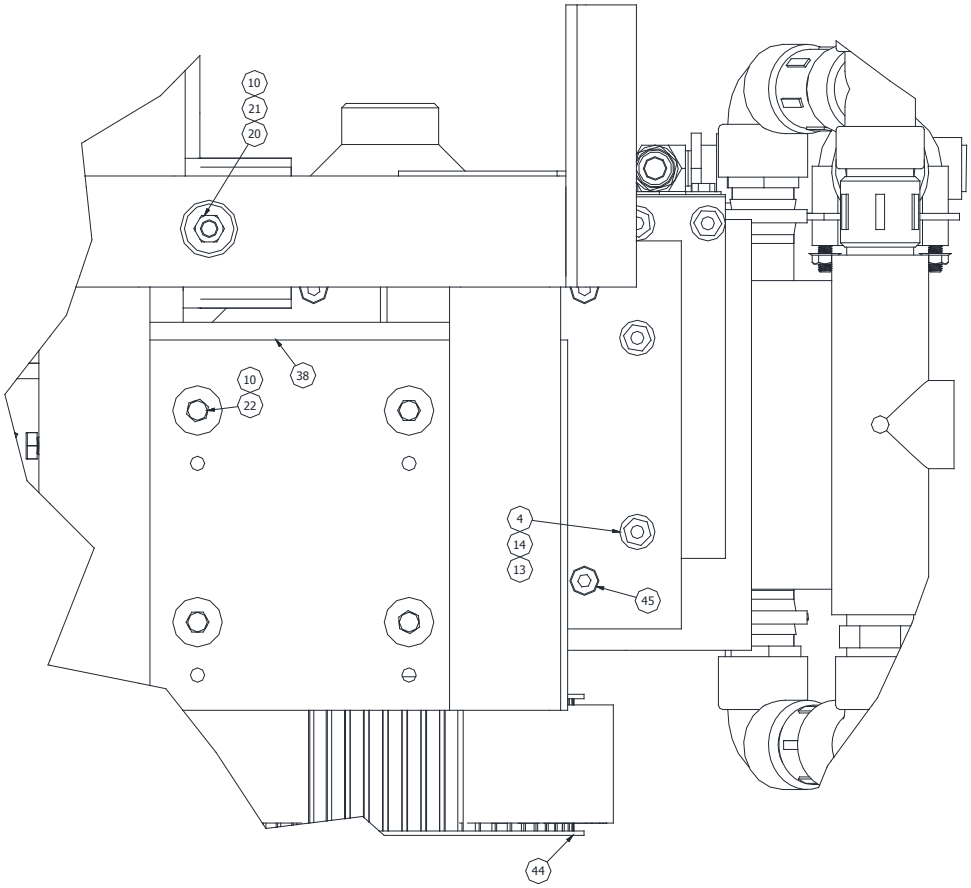

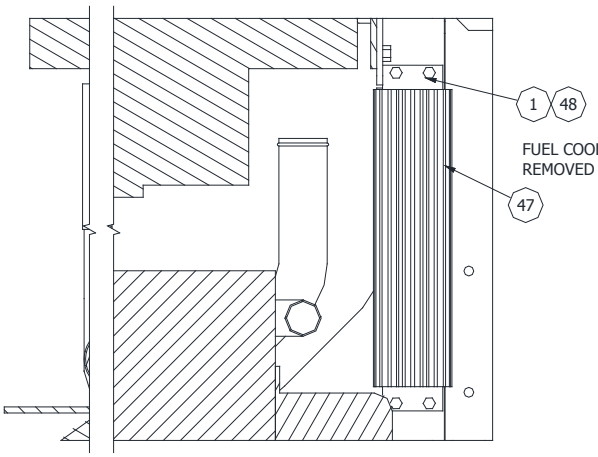

SECTION B-B
SCALE 1 / 4

High Flow Pump Assembly - 79965100

ITEM	QTY	PART NUMBER	DESCRIPTION
1	2	41006000	BUSHING, REDUCER 1" X 3/4"
2	3	77736900	CLAMP, HOSE 1-9/16 - 2-1/2 #32
3	2'	77748200	HOSE 1-1/2 ID X 4 SPIRAL
4	3	79811200	NIPPLE CLOSE 4", 1-1/2 X 1-1/2 P
5	1	79811800	NIPPLE, 1-1/2 X 1-1/2 MPT POLYP
6	3	79812100	BARB, HOSE 1-1/2 MPT X 1-1/2 PO
7	3	79812600	ELBOW, 90 DEG. 1-1/2 NPT FEMALE
8	2	79816200	ELBOW, 90 DEG STREET 3/4 STEEL
9	1	79821500	ADAPTER, 3/4" MNPT/ -12 JIC
10	1	79823000	NIPPLE, HEX 1 X 3/4
11	1	79871900	TEE, 1-1/2 FNPT POLYPRO
12	1	79922340	SPROCKET, DRIVE 60 TOOTH 14MM X 85MM
13	1	79922360	BUSHING, 35MM BORE W/ 10MM KEY
14	1	79965500	PUMP, GIANT MODEL GP5136
15	1	79965600	UNLOADER, GIANT 22949
16	1	79965640	TEE, 1" NPTF - MALE/FEMALE ZN PLT
17	1	79965650	NIPPLE, ADAPTER 1" MNPTF X 1" MBSPP
18	1	79965660	ELBOW 90, 3/4(MPT) STL
19	154 oz	79965700	OIL, GEAR SAE 80
20	1	79838300	PLUG, G1
21	1	79816100	TEE, FEMALE 3/4 NPT STEEL
22	1	77742600	BUSHING, REDUCER 3/4 X 1/2
23	1	72704800	VALVE, BALL 1/2 M X 1/2 F
24	1	79948130	NIPPLE 3/4 NPT ZINC PLT. STEEL
25	1	79965605	DUMP VALVE, GIANT 22973

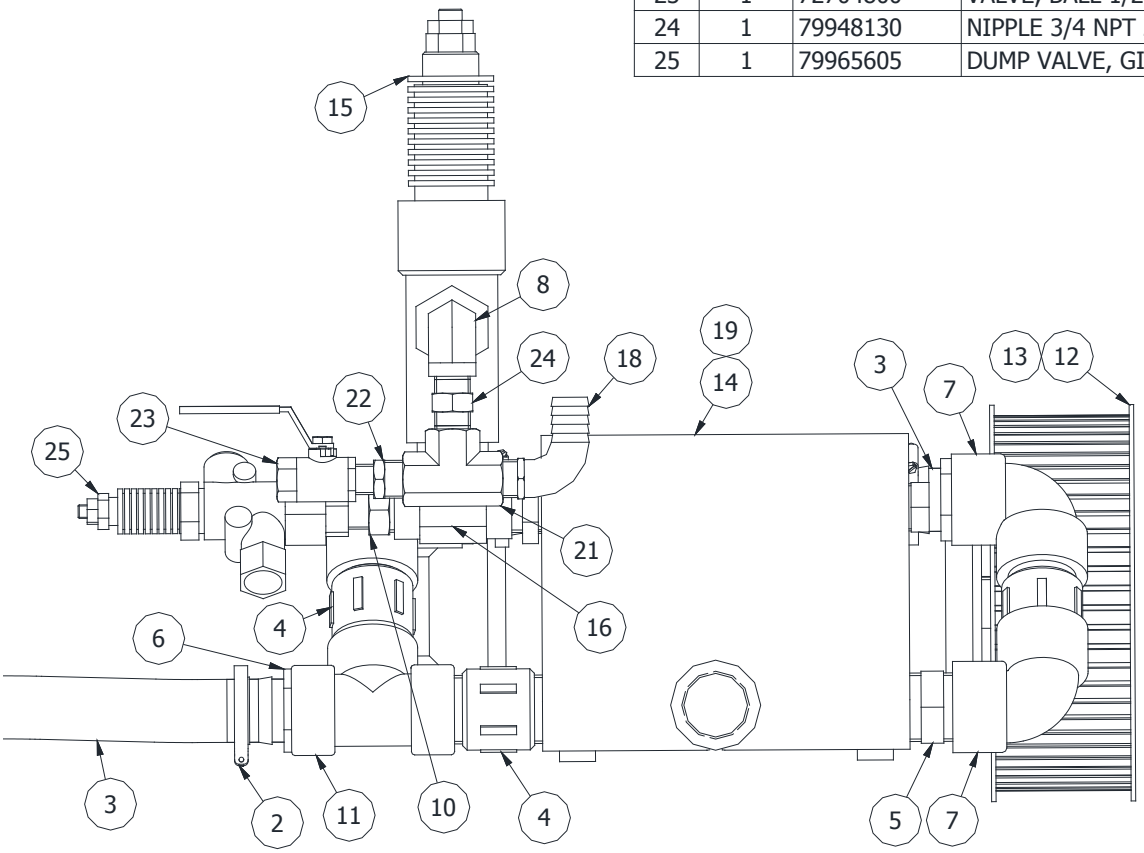

High Flow Pump Assembly - 79965100

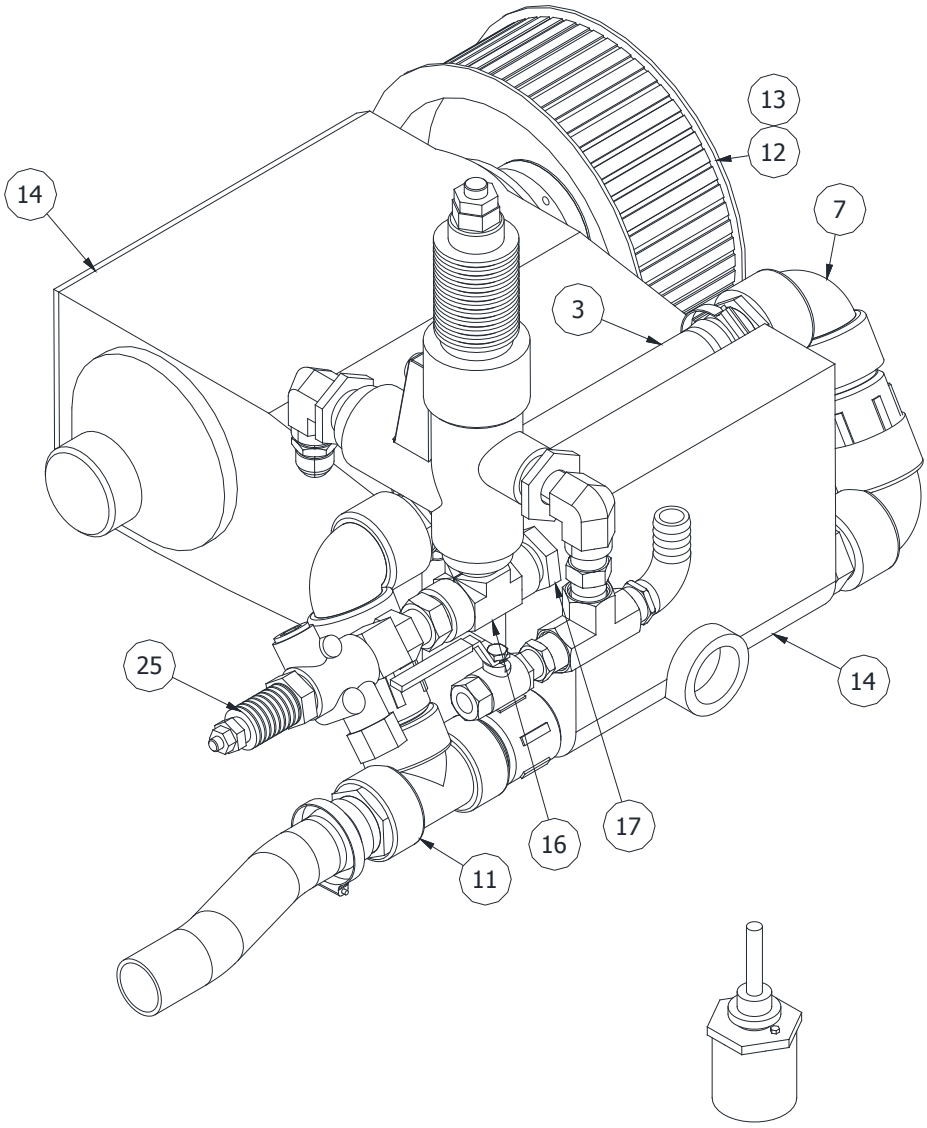

79953920 Pulsator
(High Flow Version)

Dump Valve Giant 22973CR - 79965605

ITEM #	QTY	PART NO.	DESCRIPTION
1	1	79803701	VALVE BODY (GIANT 12232)
2	1	79803702	GUIDE PLUG (GIANT 12240)
3	1	79803703	O-RING (GIANT 12057)
2A	1	79803704	GUIDE RING (GIANT 12241)
5	1	79803705	PISTON RING (GIANT 12242)
6	1	79803706	O-RING, VALVE STEM (GIANT 12204)
7	1	79803707	BACKUP RING, VALVE STEM (GIANT 12205)
11	1	79803708	BALL (GIANT 12207)
12	1	79803709	VALVE SPRING (GIANT 12216)
8	1	79803710	PISTON, GIANT #12206
12A	2	79803711	SEAT, INLET (GIANT 12208)
13	2	79803712	VALVE PLUG (GIANT 12243)
14	1	79803713	VALVE PLATE (GIANT 12244)
16	1	79803714	SPACER SLEEVE (GIANT 12245)
15	19	79803715	SPRING, ORANGE (GIANT 12220)
14C	2	79803716	O-RING (GIANT 07035)
14D	1	79803717	SPRING, OUTLET VALVE
17	1	79803718	SELF-LOCKING HEX NUT (GIANT 12246)
18	1	79803719	WASHER, SPRING (GIANT 12223)
9	1	79803720	CUP, 28 MM - GIANT 05005
19	4	79803721	PLUG (GIANT 12098)
19A	4	79803722	O-RING, PLUG (GIANT 12017)
21A	1	79803723	SPACER DISC, .5MM (GIANT 06821)
21B	3	79803724	SPACER DISC, 1.0 MM (GIANT 06822)
24	1	79803725	SERRATED PIN (GIANT 12247)
10	1	79803730	BACK UP O-RING, GIANT 05015

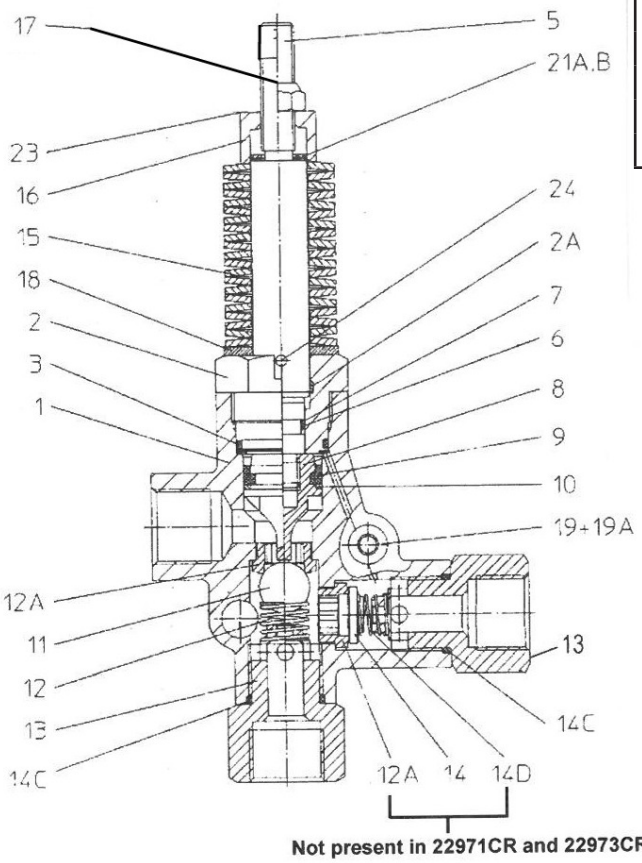

Not present in 22971CR and 22973CR

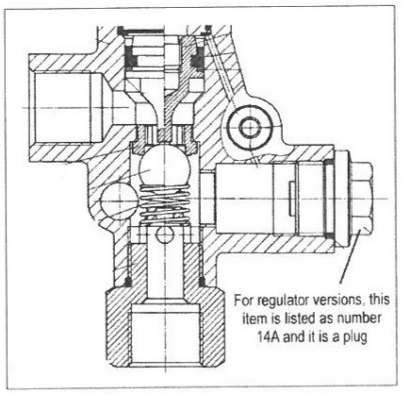

Pump Parts List - 79965500

ITEM #	QTY	PART NO.	DESCRIPTION
1	1	79965101	Crankcase
2	1	79965102	Oil Filler Plug Assembly
3	1	79965103	Oil Sight Glass Assy.
4	1	79965104	Crankcase Cover
5	1	79965105	O-Ring
8	1	79965106	Oil Dip Stick
9	1	79965107	O-Ring, Dip Stick
10	4	79965108	Inner Hexagon Screw
11	4	79965109	Spring Washer
12	1	79965110	Drain Plug G 3/4"
13	1	79965111	Gasket, Drain Plug
14	2	79965112	Bearing Cover
15	2	79965113	Radial Shaft Seal
16	2	79965114	O-Ring
17	8	79965115	Hexagon Screw
18	8	79965116	Spring Washer
20	2	79965117	Taper Roller Bearing
20A	5	79965118	Fitting Disc (Shim)
21	1	79965119	Shaft Protector
22	1	79965120	Crankshaft
23	1	79965121	Fitting Key
24	3	79965122	Connecting Rod Assy.
25	3	79965123	Crosshead Assy.
28	3	79965124	Crosshead Pin
29A	3	79965125	Centering Sleeve
29B	3	79965126	Plunger Pipe
29C	3	79965127	Tensioning Screw
29D	3	79965128	Copper Ring
30	3	79965129	Oil Scraper
31	3	79965130	Radial Shaft Seal
35	3	79965131	Seal Sleeve
35B	3	79965132	O-Ring
36	3	79965133	Grooved Ring

ITEM #	QTY	PART NO.	DESCRIPTION
37	3	79965134	Seal Case
37A	3	79965135	O-Ring
37B	3	79965136	O-Ring
39	3	79965137	Pressure Ring
40	6	79965138	V-Sleeve
41	3	79965139	Sleeve Support Ring
42	3	79965140	Tension Spring
43	1	79965141	Valve Casing
46	3	79965142	Suction Valve Assy.
46A	1	79965143	O-Ring
46B	1	79965144	O-Ring
46C	1	79965145	Suction Valve Seat
46D	1	79965146	Valve Plate
46E	1	79965147	Valve Spring
46F	1	79965148	Spring Tension Cap
46G	1	79965149	Spacer Pipe
47	3	79965150	Discharge Valve Assy.
47A	1	79965151	O-Ring
47B	1	79965152	O-Ring
47C	1	79965153	Discharge Valve Seat
47D	1	79965154	Valve Plate
47E	1	79965155	Valve Spring
47F	1	79965156	Spring Tension Cap
48	3	79965157	Plug
48A	12	79965158	Inner Hexagon Screw
48B	3	79965159	O-Ring
48C	3	79965160	Pressure Ring
49	8	79965161	Inner Hexagon Screw
52	1	79965162	Disc for Crankshaft
53	1	79965163	Hexagon Screw
54	1	79965164	Plug G 1"
55	2	79965165	Plug G 1-1/2"

Pump - Exploded View - 79965500

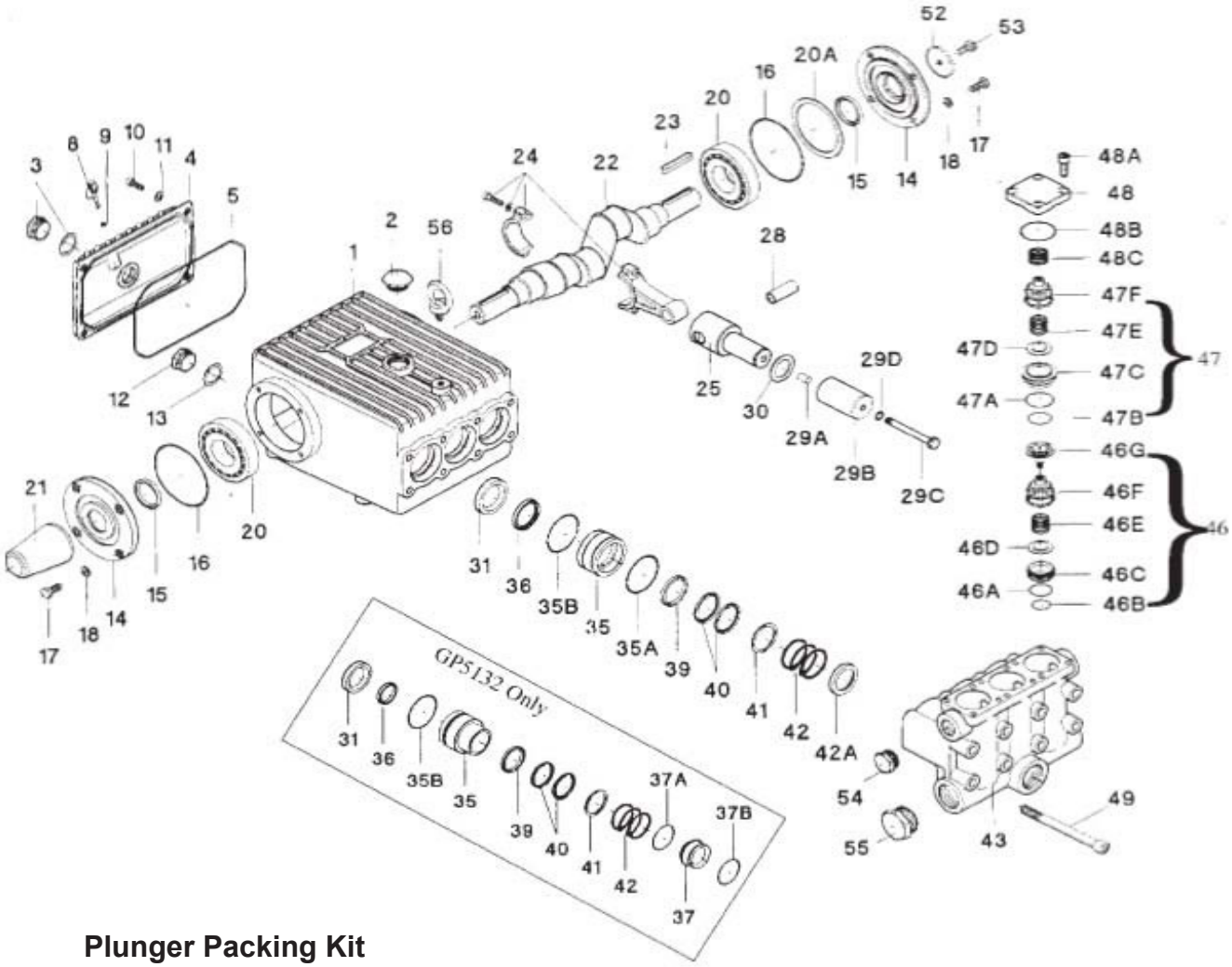

Plunger Packing Kit
79965166 (1 Required)

PART NO.	QTY	DESCRIPTION
79965132	3	O-RING
79965133	3	GROOVED RING
79965138	6	V-SLEEVE

Discharge Valve Kit
79965168 (1 Required)

PART NO.	QTY	DESCRIPTION
79965151	1	O-RING
79965152	1	O-RING
79965153	1	VALVE SEAT
79965146	1	VALVE PLATE
79965147	1	VALVE SPRING

Inlet Valve Assy. Kit (75800567)

PART NO.	QTY	DESCRIPTION
79965143	1	O-RING
79965144	1	O-RING
79965145	1	VALVE SEAT
79965146	1	VALVE PLATE
79965147	1	VALVE SPRING

Hi-Flow Unloader - 79965600

ITEM #	QTY	PART NO.	DESCRIPTION
1	1	79965169	CASING, UNLOADER
2	2	79965170	TENSION PLUG, UNLOADER
2A	2	79965171	SPRING TENSION DISC, UNLOADER
3	1	79965172	RETAINER, VALVE
3A	1	79965173	RETAINER, DISCHARGE VALVE
4	1	79965174	SPRING, DISCHARGE VALVE
4A	1	79965175	SPRING, INLET VALVE
5	1	79965176	BALL VALVE, INLET
5A	1	79965177	SPACER DISC
6	1	79965178	VALVE, DISCHARGE
7	1	79965179	VALVE SEAT, DISCHARGE
8	1	79965180	VALVE SEAT, INLET
9	1	79965181	CYLINDER
10	1	79965182	GUIDE
11	3	79965183	O-RING
12	2	79965184	SUPPORT RING
13	1	79965185	O-RING, DISCHARGE VALVE SEAT
14	2	79965186	O-RING
15	1	79965187	PISTON
16	1	79965188	SPACER
17	1	79965189	PACKING
18	1	79965190	VALVE STEM
19A	1	79965191	O-RING, VALVE STEM
19B	2	79965192	SPACER, VALVE STEM
19C	1	79965193	KEY
19D	1	79965194	TENSION SLEEVE
20	1	79965195	SUPPORT RING
20A	4	79965196	ALLEN SCREW
20B	4	79965197	WASHER, SPRING
21	1	79965198	DISC
22	19	79965199	SPRING, RED
23	1	79965200	NUT, ADJUSTING
23A	1	79965201	SPACER DISC, .2m
23B	2	79965202	SPACER DISC, .5mm
23C	2	79965203	SPACER DISC, 1.0mm
23D	1	79965204	SPACER DISC, 5mm
24	1	79965205	NUT, LOCKING
24A	1	79965206	TENSION PIN
25	6	79965207	PLUG, 1/4"
25A	6	79965208	WASHER

Hi-Flow Unloader - 79965600

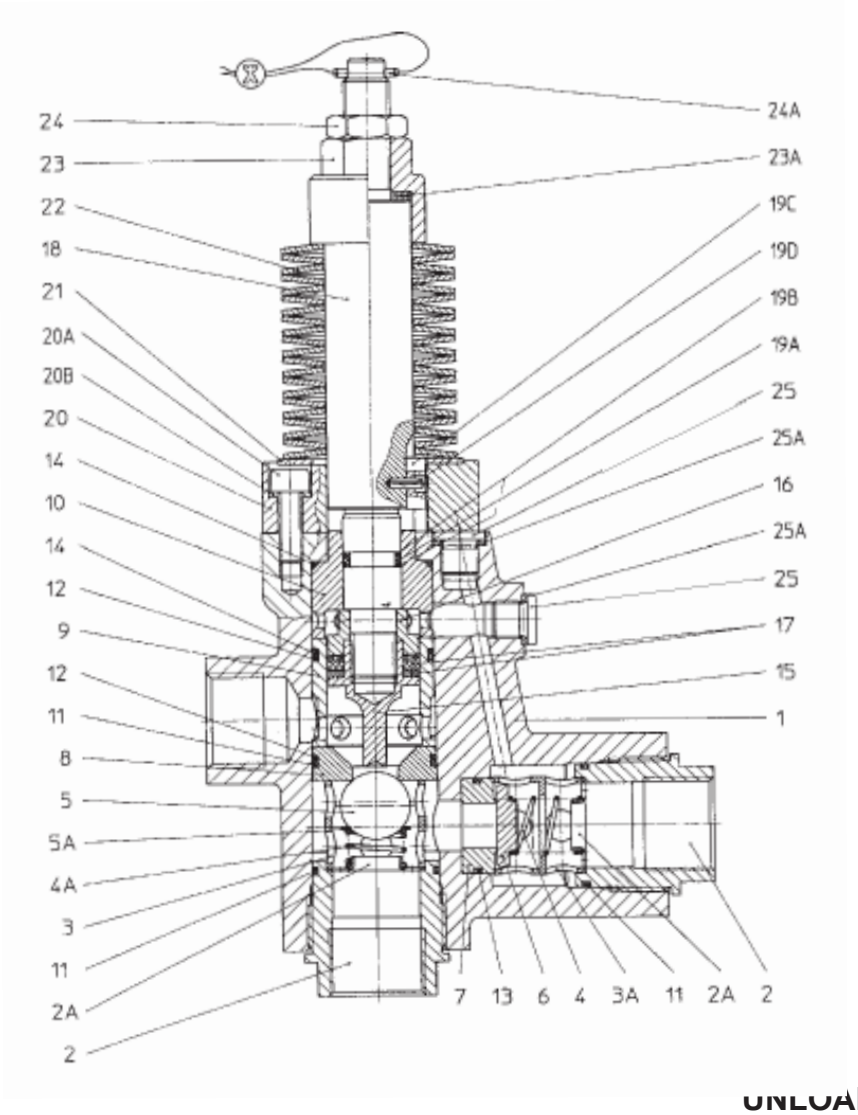

ORING REPAIR KIT - 79965209

PART NO.	QTY	DESCRIPTION
79965183	3	O-RING
79965184	2	SUPPORT RING
79965185	1	O-RING, DISCHRG VALVE SEAT
79965186	2	O-RING
79965189	1	PACKING
79965191	1	O-RING, VALVE STEM
79965194	1	TENSION SLEEVE

UNLOADER REPAIR KIT - 79965210

PART NO.	QTY	DESCRIPTION
79965174	1	SPRING, DISCHARGE VALVE
79965175	1	SPRING, INLET VALVE
79965176	1	BALL VALVE, INLET
79965178	1	VALVE, DISCHARGE
79965183	3	O-RING
79965184	2	SUPPORT RING
79965185	1	O-RING, DSCHRG VALVE SEAT
79965186	2	O-RING
79965189	1	PACKING
79965191	1	O-RING, VALVE STEM
79965192	2	SPACER, VALVE STEM
79965194	1	TENSION SLEEVE

High Flow Included & Optional Accessories

PART NO.	DESCRIPTION
73817300	WASH DOWN ACCESSORY KIT
77816000	1/4" x 75' THERMOPLASTIC HOSE
73808602	3/8" x 150' THERMOPLASTIC HOSE
73808600	3/8" x 250' THERMOPLASTIC HOSE
73808603	3/8" x 350' THERMOPLASTIC HOSE
77771100	1/2" x 150' THERMOPLASTIC HOSE
77771200	1/2" x 250' THERMOPLASTIC HOSE
79964000	5/8" X 500' THERMOPLASTIC HOSE
79944100	5/8" X 100' TANK FILL HOSE
77799800	HANDGUN - LANCE ASSEMBLY
77800600	HOSE GUARD (TIGER TAIL)
79873500	HOSE, ANTI - TURNAROUND DEVICE
44256200	JETTING SAFETY GLOVES
77752600	MOBILE HOSE REEL
71109900	TIP CLEANER
77763700	VENTURI PUMP
79966000	REGULAR NOZZLE - CLOSED HIGH FLOW
79966100	REGULAR NOZZLE - OPEN HIGH FLOW
79868400	GRENADE NOZZLE
79968200	Q NOZZZLE HIGH FLOW
79968100	ROCKET NOZZLE HIGH FLOW
79968300	ROTATING NOZZLE HIGH FLOW
61023600	BEACON ASSEMBLY, (BATTERY OPERATED)
79943800	NOZZLE, BEACON ADAPTER
79922950	WARTHOG NOZZLE (6" - 18" lines
79824900	1/2” X 15’ RED LEADER HOSE
77701401	1/4” TRAP HOSE NOZZLE
79825000	12” TURN PROTECTION NIPPLE
79923400	WARTHOG SKID (6" - 18" lines)
77701401	1/4" TRAP HOSE NOZZLE
71701700	3/16” X 50’ STAINLESS STEEL TRAP HOSE
71701800	3/16” X 75’ STAINLESS STEEL TRAP HOSE
71702900	3/16” X 100’ STAINLESS STEEL TRAP HOSE
79968500	3000 PSI PERFORMANCE NOZZLE KIT

Section 4
Features Specific to Ultimate Warrior
Table of Contents

Specific to: ULTIMATE WARRIOR

PARTS & ACCESSORIES SECTION

Power Pack 79925000..... 79-84

HP Pump Assembly 79940200.....85-86

Pump Parts List - 79802500 87

Pump Exploded View 88

Unloader - 79803700..... 89-90

Ultimate Warrior

Included & Optional Accessories.....91

Power Pack Assembly - 79925000

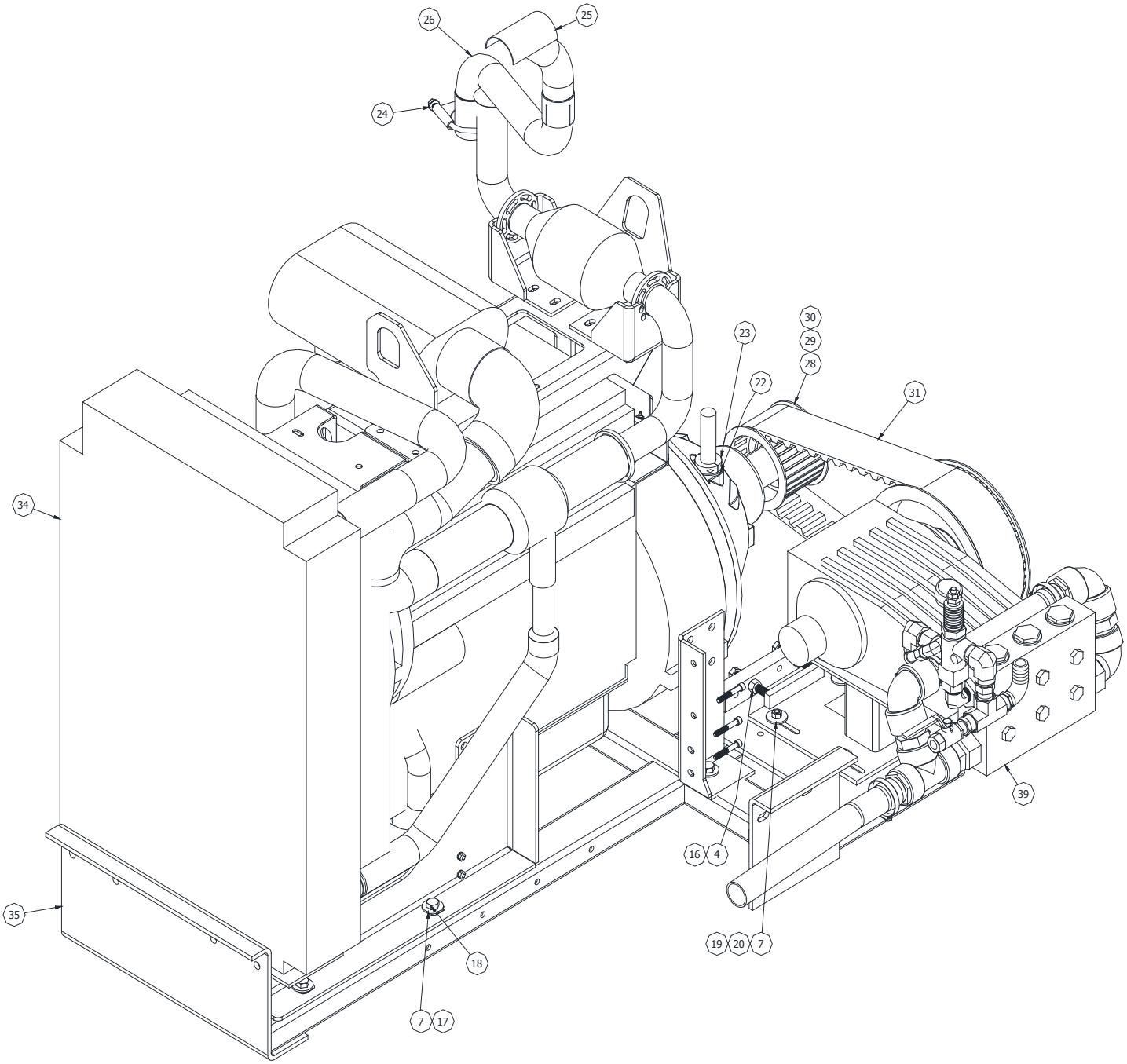

Power Pack Assembly - 79925000

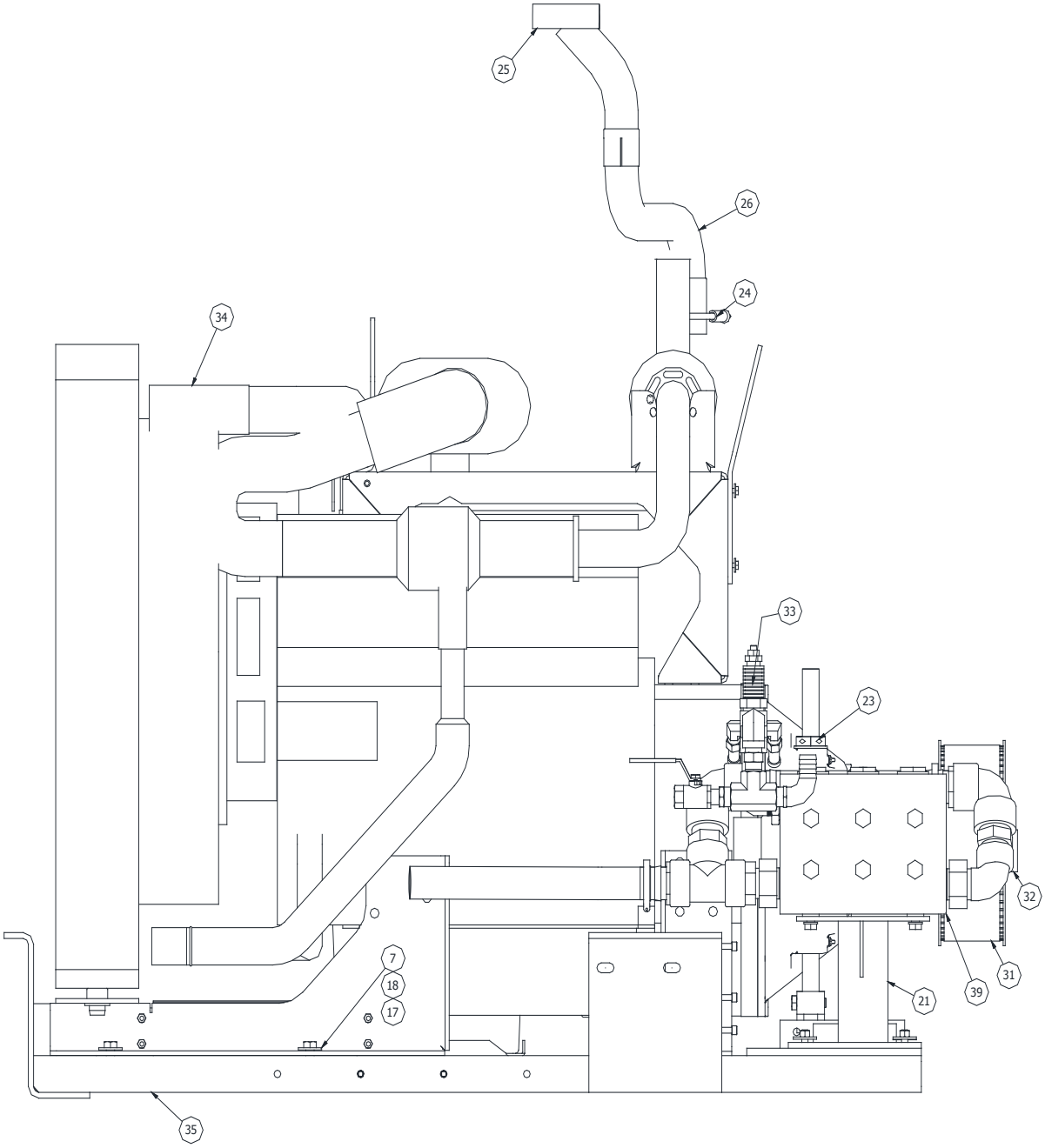

Power Pack Assembly - 79925000

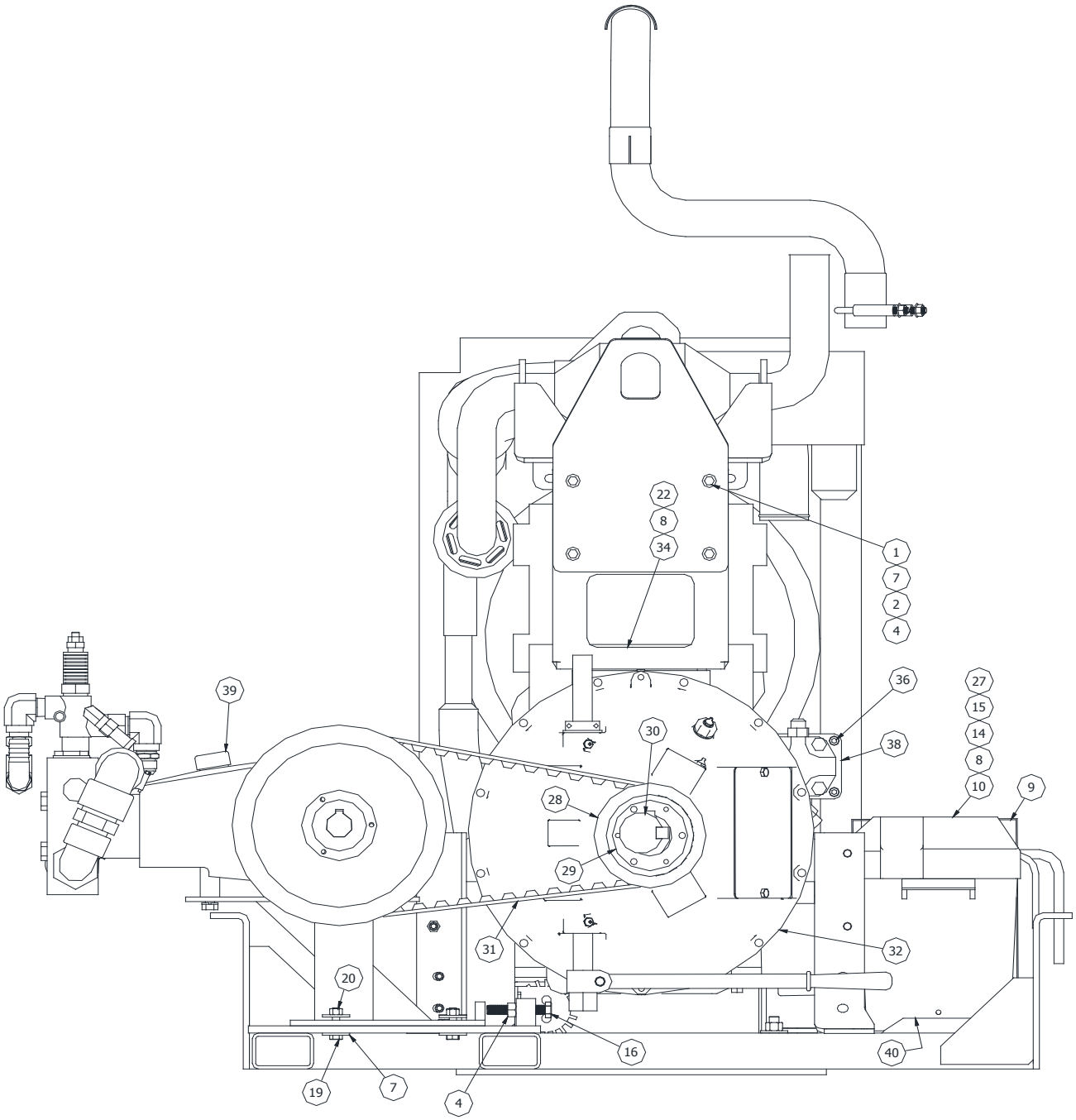

Power Pack Assembly - 79925000

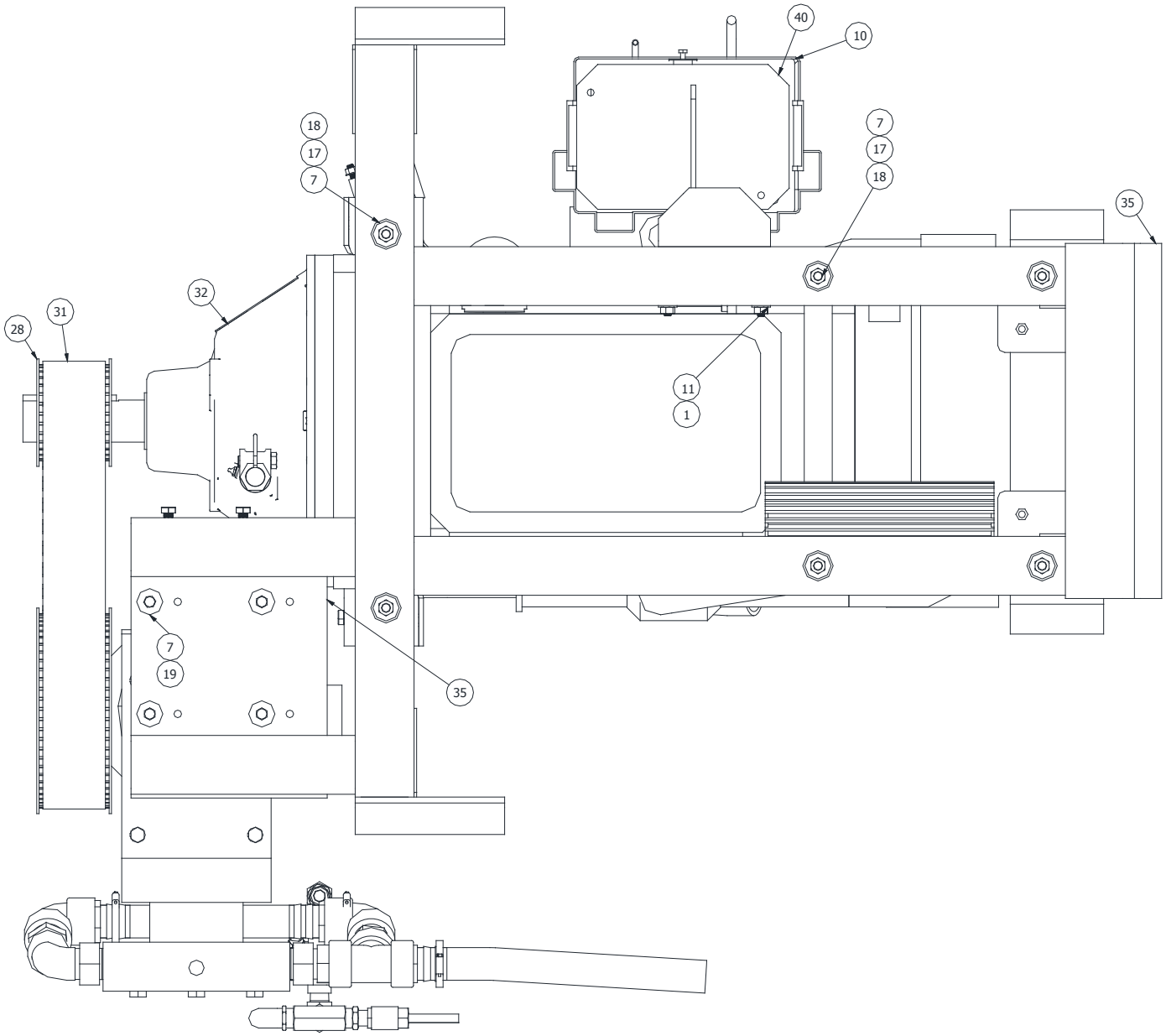

Power Pack Assembly - 79925000

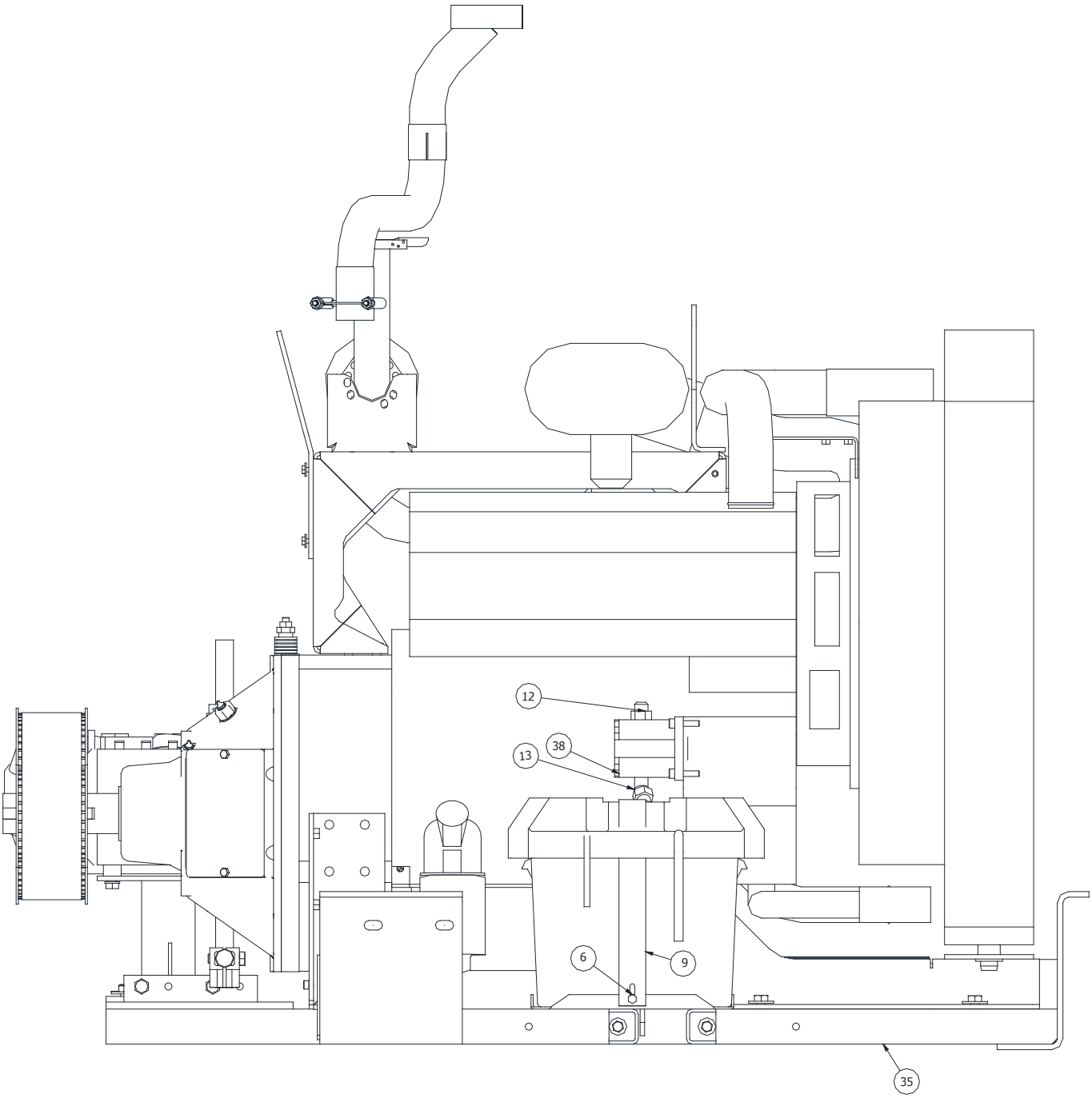

Power Pack Assembly - 79925000

ITEM	QTY	PART NUMBER	DESCRIPTION
1	2	00117500	SCREW, HEX HD 3/8-16 X 4
2	4	00137300	NUT, HEX 1/4-20
3	4	00162700	WASHER, FLAT 3/8
4	2	00778000	NUT, HEX 1/2-13
5	4	02821200	NUT, NYLOCK JAM 1/4-20
6	2	04728200	SCREW, HEX HD 1/4-20 X 3/8
7	22	73826900	WASHER, FLAT 1/2 USS HIGH STRENGTH
8	1	73830900	CABLE, NEGATIVE BATTERY 60" LG
9	1	75814700	STRAP, BATTERY HOLD DOWN
10	1	75815300	BOX, BATTERY (MODIFIED)
11	2	77748000	NUT, STOVER LOCK 2/8-16 UNC
12	1	79846500	ADAPTER-10 O-RING/-8JIC
13	1	79846600	ADAPTER-12 O-RING/JIC45 DEG
14	1	79847800	BATTERY, DIESEL 875 CCA
15	1	79847900	CABLE, POSITIVE BATTERY 798
16	2	79908500	SCREW, HEX HD 1/2-13 X 3
17	7	79920141	NUT, HX GR8 1/2-13 STOVER
18	7	79920145	HEX HD BOLT 1/2-13 X 1-1/2 GR8
19	4	79920150	HEX HD BOLT 3/8-16 X 1-1/2 GR8
20	4	79920151	HEX NUT, 3/8-16 GRADE 8
21	1	79920232	WELDMENT, PUMP PEDESTAL T4
22	1	79920261	BEARING, 1"IDX2"ODX1/8 DELRIN
23	1	79920262	COLLAR, 1" SHAFT 2 PIECE
24	1	79920330	CLAMP, EXHAUST 2-1/2
25	1	79920384	WELDMENT 2" EXHAUST 45 DEGREE
26	1	79920388	ELBOW, EXHAUST T4
27	1	79922290	PROTECTOR SET, BAT TERMINALS
28	1	79922330	SPROCKET, DRIVE 30 TOOTH 14MM X 85MM
29	1	79922350	BUSHING, QD-SK 2-1/4 BORE
30	1	79922355	KEY, STEP 1/2 X 5/8 SQ
31	1	79922370	BELT, DRIVE 1400 PTH 14M42
32	1	79925200	CLUTCH, WARRIOR (FURNISHED W/ 79925300)
33	1	79925210	SPACER WPT TO KOHLER (FURNISHED WITH 79925300)
34	1	79925300	ENGINE, DIESEL TIER 4
35	1	79925400	WELDMENT,TIER 4 POWER PACK
36	4	79925470	SCREW, SOC HD CAP M8-1.25 X 35
37	3	79925480	SCREW, SOC HD CAP 5/16-18 X 2
38	1	79926400	PUMP,HYD GEAR-TIER 4 ENGINE
39	1	79940200	PUMP ASSEMBLY 798
40	1	79969100	WLDMNT, BATTERY TRAY T4

Assy, Pump Warrior - 79940200

ITEM	QTY	PART NUMBER	DESCRIPTION
1	4	44181400	WASHER, LOCK-SPLIT M12
2	1	72704800	VALVE, BALL 1/2 M X 1/2 F
3	2	77724300	ELBOW, 90 DEG. STREET 1/4 STEEL
4	3	77736900	clamp, hose 1-9/16 - 2-1/2 #32
5	1	77742600	BUSHING, REDUCER 3/4 X 1/2
6	3.5 ft	77748200	HOSE 1-1/2 ID X 4 SPIRAL
7	1	79802500	PUMP, GIANT MODEL LP301A
8	2	79802510	ADAPTER, 1-1/4 BSP-1-1/4 NPT
9	1	79803700	UNLOADER, GIANT MODEL 22973C
10	2	79811600	NIPPLE, 1-1/2 X 1-1/4 MPT POLYP
11	2	79811800	NIPPLE, 1-1/2 X 1-1/2 MPT POLYP
12	3	79812100	BARB, HOSE 1-1/2 MPT X 1-1/2 PO
13	1	79812300	BUSHING, REDUCER 1" MBSPP X 3/4" NPTF
14	1	79812400	ELBOW 90, MALE 3/4 STEEL
15	1	79812500	BARB, HOSE ELBOW 90, 3/4(MPT)X 3/4 PL
16	3	79812600	ELBOW, 90 DEG. 1-1/2 NPT FEMALE
17	1	79816100	TEE, FEMALE 3/4 NPT STEEL
18	2	79816200	ELBOW, 90 DEG STREET 3/4 STEEL
19	1	79821500	ADAPTER, 3/4" MNPT/ -12 JIC
20	1	79871900	TEE, 1-1/2 FNPT POLYPRO
21	4	79920158	SCREW,HEX HD M12X25mm CL8.8
22	1	79922340	SPROCKET, DRIVE 60 TOOTH 14MM X 85MM
23	1	79922360	BUSHING, QD-SK 35MM BORE W/ 10MM KEYWAY
24	1	79948130	NIPPLE 3/4 NPT ZINC PLT. STEEL
25	2	79974000	VALVE, POP OFF

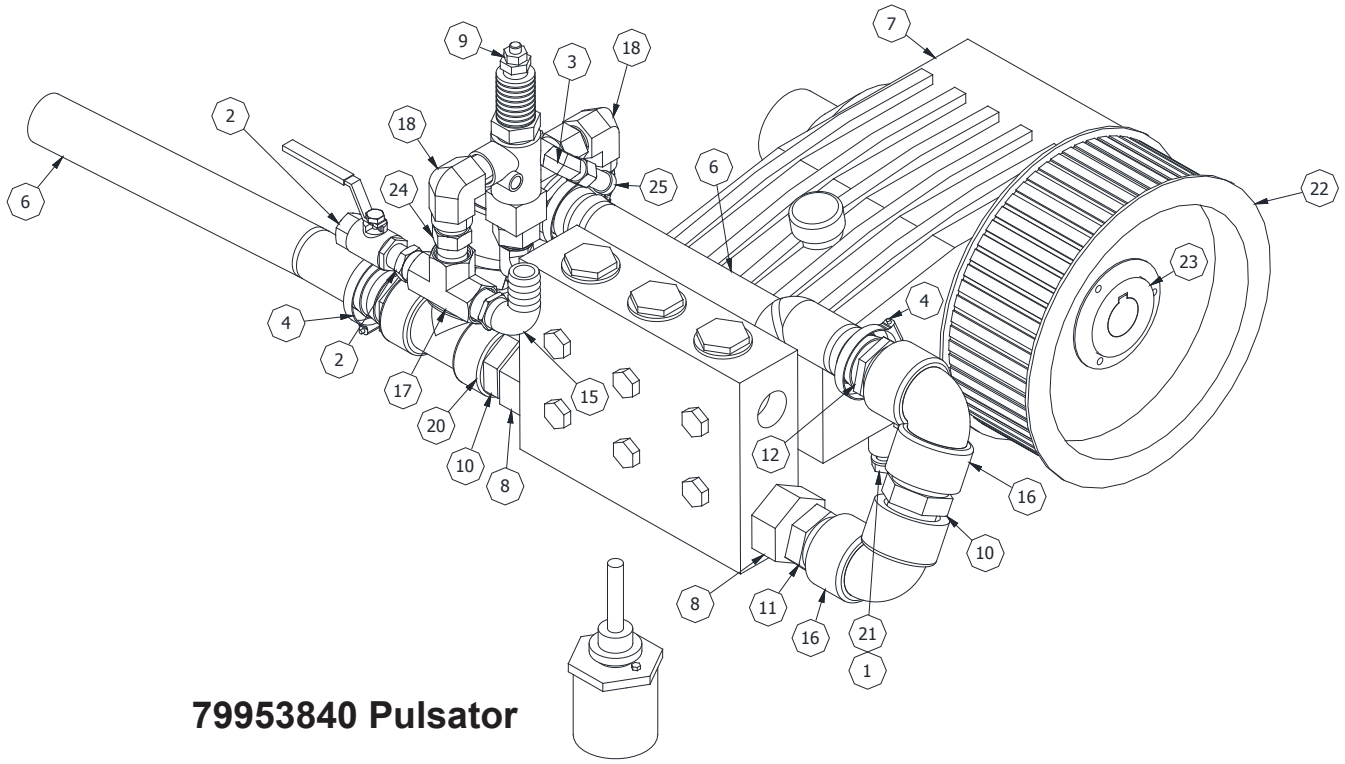

79953840 Pulsator

Assy, Pump Warrior - 79940200

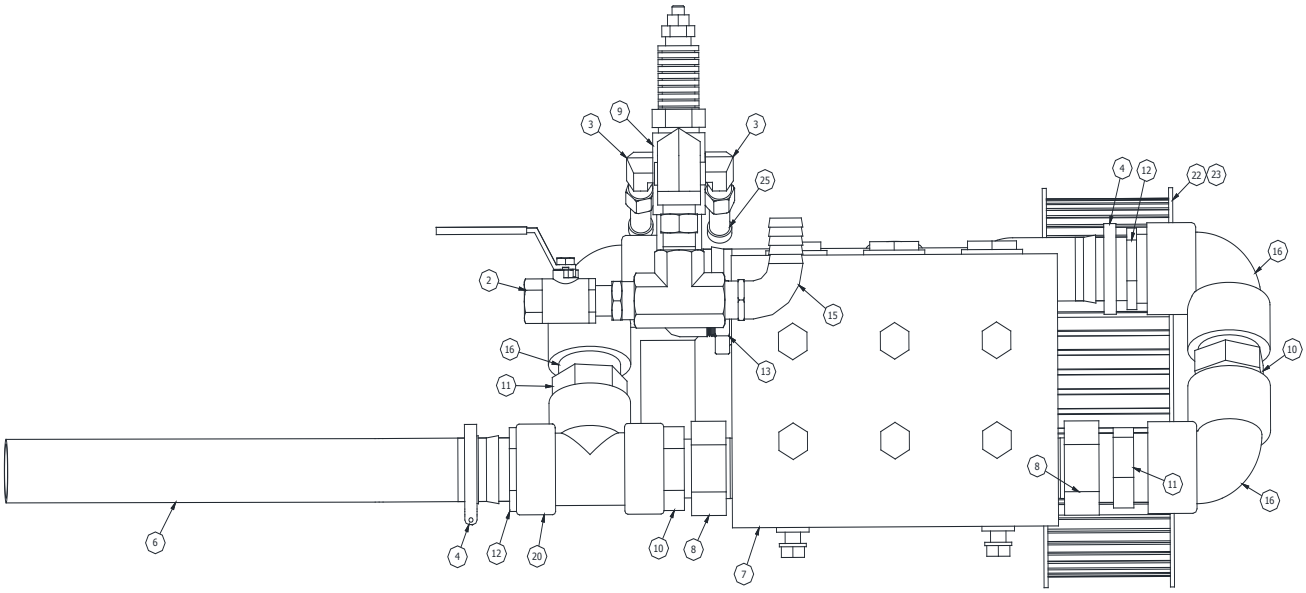

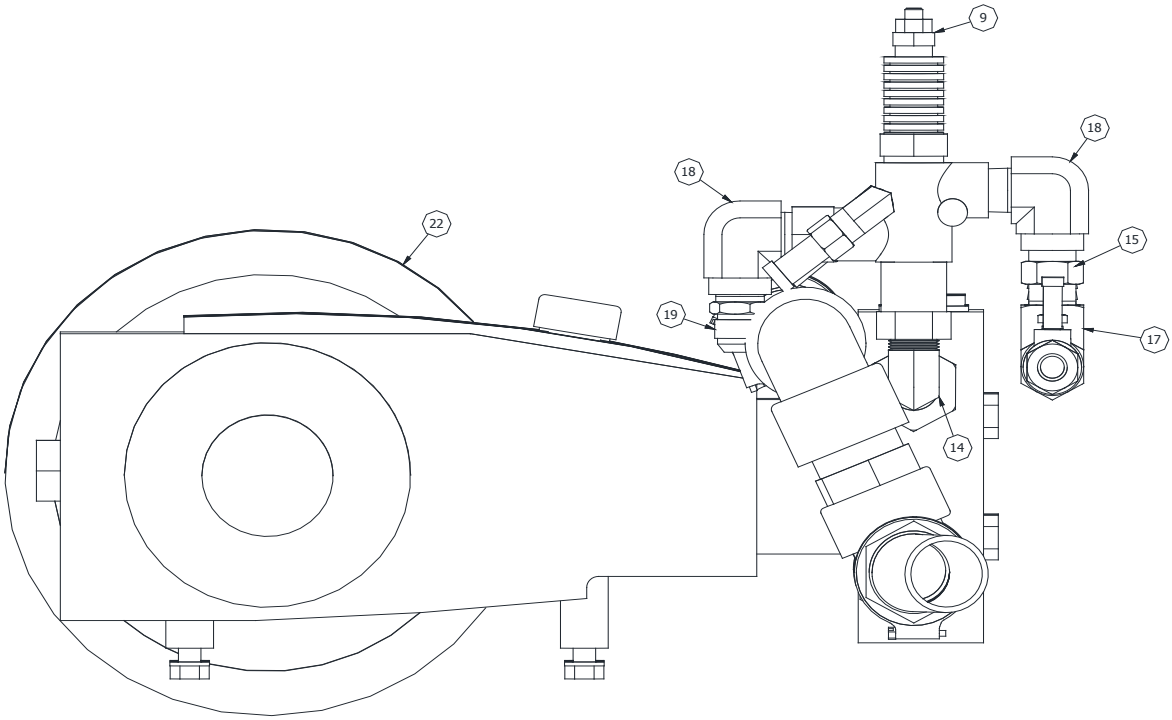

Pump Parts List - 79802500

ITEM #	QTY	PART NO.	DESCRIPTION
31A	3	79835300	OIL SEAL
32	3	79835400	RETAINER, OIL SEAL
32A	3	79835500	O-RING
33	3	79835600	SEAL
35	3	79835700	SEAL SLEAVE
36	3	79835800	LEAKAGE SEAL *
37	3	79835900	SEAL CASE
38	3	79836000	O-RING, SEAL CASE *
38A	3	79836100	SUPPORT RING *
39	3	79836200	O-RING *
39A	3	79836300	SUPPORT RING *
40	6	79836400	V-SLEAVE *
40A	3	79836500	SUPPORT RING *
40B	3	79836600	GUIDE RING
41	3	79836700	PRESSURE SPRING
43	1	79836800	VALVE CASING
44A	9	79836900	O-RING **
44B	3	79837000	SUPPORT RING **
45	6	79837100	TENSION SPRING
46	6	79837200	VALVE ASSY, COMPLETE
46A	6	79837300	VALVE SEAT **
46B	6	79837400	VALVE PLATE **
46C	6	79837500	VALVE SPRING **
46D	6	79837600	SPACER, PIPE
48	3	79837700	PLUG, VALVE
49	8	79837800	STUD BOLT
49A	8	79837900	NUT, HEXAGON
52	1	79838100	DISC FOR CRANKSHAFT
53	1	79838200	HEXAGON SCREW
54	2	79838300	PLUG, G 1
55	2	79838400	PLUG, G 1-1/4
56	1	79853800	WASHER, CRUSH w/ O-RING

ITEM #	QTY	PART NO.	DESCRIPTION
1	1	79832000	CRANKCASE
2	1	79832100	OIL FILLER PLUG ASSY
4	1	79832200	CRANKCASE COVER
5	1	79832300	O-RING, CRANKCASE COVER
6	1	79832400	OIL SIGHT GLASS w/ GASKET
7	1	79832500	GASKET (FOR SIGHT GLASS)
8	1	79832600	OIL DIPSTICK ASSY
9	1	79832700	O-RING, (FOR DIPSTICK)
10	4	79832800	CYLINDER SCREW
11	5	79832900	SPRING RING
12	1	79833000	PLUG
13	1	79833100	GASKET
14	2	79833200	BEARING COVER
15	2	79833300	RADIAL SHAFT SEAL
16	2	79833400	O-RING
17	8	79833500	HEXAGON SCREW
20	2	79833600	TAPER ROLLER BEARING
20A	1	79833700	FITTING DISC 798 PUMP
20B	1	79833800	FITTING DISC
21	1	79833900	SHAFT PROTECTOR
22	1	79834000	CRANKSHAFT
23	1	79834100	WOODRUFF KEY
24	3	79834200	CONNECTING ROD ASSY
24A	6	79834300	INNER HEX SCREW
24B	6	79834400	SPRING WASHER
25	3	79834500	CROSSHEAD ASSY
28	3	79834600	CROSSHEAD PIN
29A	3	79834700	CENTERING SLEEVE
29B	3	79834800	PLUNGER PIPE
29C	3	79834900	TENSIONING SCREW
29D	3	79835000	COPPER RING
30	3	79835100	O-RING
31	3	79835200	RETAINER, COMPLETE

*** included with Plunger Packing Kit 79838500**

**** Included in Valve Kit 79838600**

Pump - Exploded View - 79802500

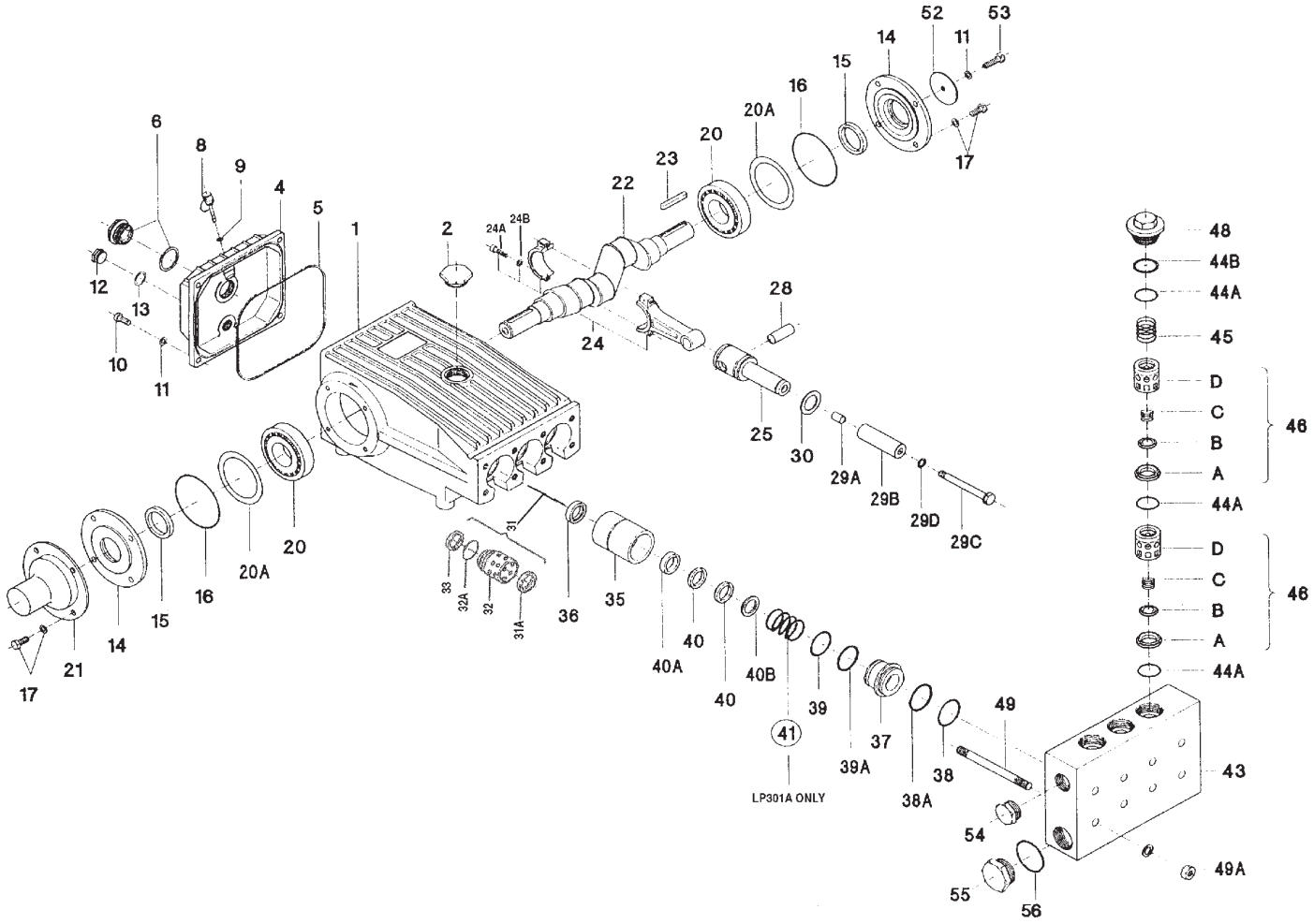

Plunger Packing Kit

79838500

ITEM #	QTY	PART NO.	DESCRIPTION
36	3	79835800	Leakage Seal
38	3	79836000	O-Ring, Seal Case
38A	3	79836100	Support Ring
39	3	79836200	O-Ring
39A	3	79836300	Support Ring
40	6	79836400	V-Sleeve (Packing)
40A	3	79836500	Support Ring

Valve Kit

79838600

ITEM #	QTY	PART NO.	DESCRIPTION
46A	6	79837300	Valve Seat
46B	6	79837400	Valve Plate
46C	6	79837500	Valve Spring
44A	9	79836900	O-Ring
44B	3	79837000	Support Ring

Unloader Giant 22973C - 79803700

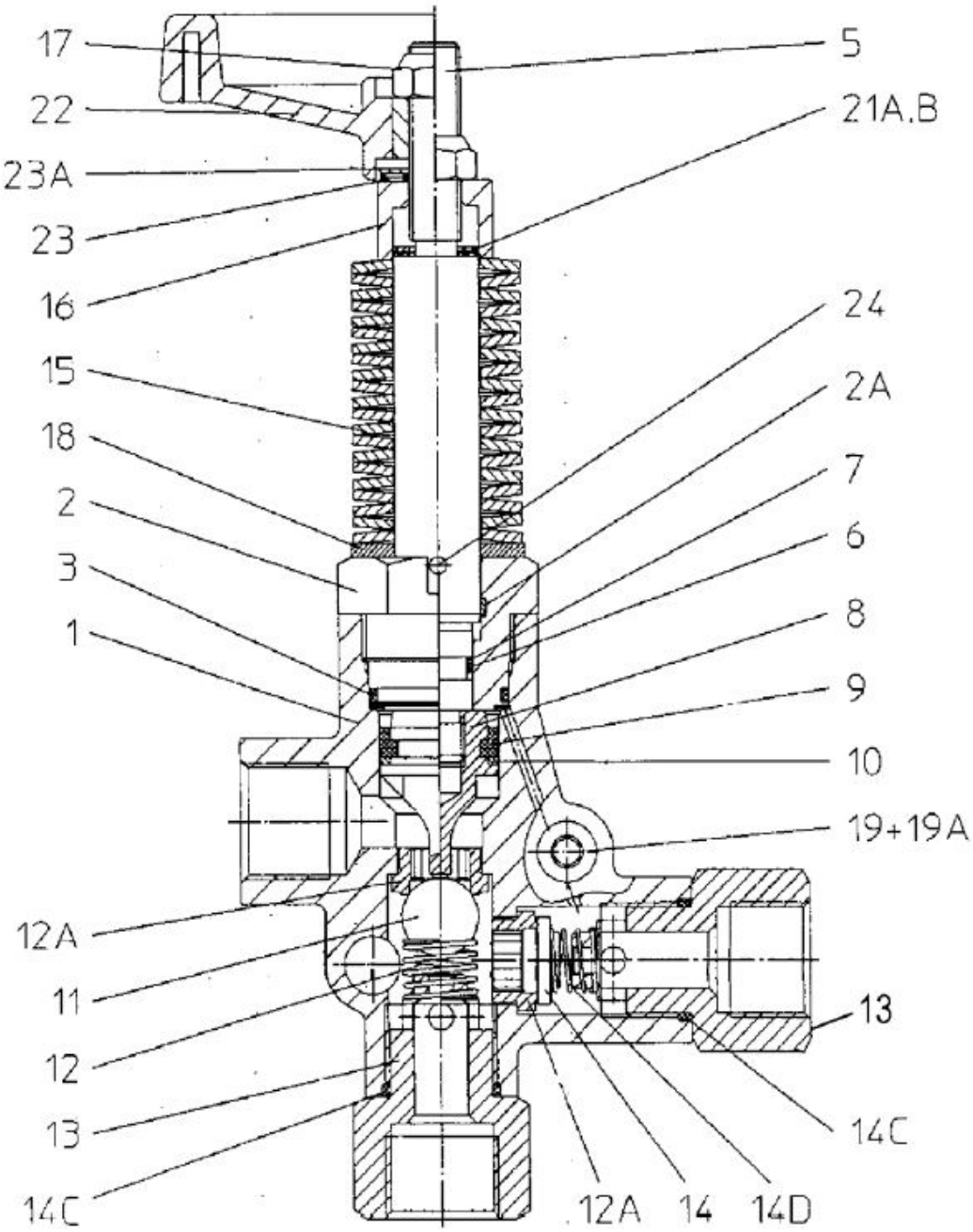

Unloader Giant 22973C - 79803700

ITEM #	QTY	PART NO.	DESCRIPTION
1	1	79803701	VALVE BODY (GIANT 12232)
2	1	79803702	GUIDE PLUG (GIANT 12240)
3	1	79803703	O-RING (GIANT 12057)
2A	1	79803704	GUIDE RING (GIANT 12241)
5	1	79803705	PISTON RING (GIANT 12242)
6	1	79803706	O-RING, VALVE STEM (GIANT 12204)
7	1	79803707	BACKUP RING, VALVE STEM (GIANT 12205)
11	1	79803708	BALL (GIANT 12207)
12	1	79803709	VALVE SPRING (GIANT 12216)
8	1	79803710	PISTON, GIANT #12206
12A	2	79803711	SEAT, INLET (GIANT 12208)
13	2	79803712	VALVE PLUG (GIANT 12243)
14	1	79803713	VALVE PLATE (GIANT 12244)
16	1	79803714	SPACER SLEEVE (GIANT 12245)
15	19	79803715	SPRING, ORANGE (GIANT 12220)
14C	2	79803716	O-RING (GIANT 07035)
14D	1	79803717	SPRING, OUTLET VALVE
17	1	79803718	SELF-LOCKING HEX NUT (GIANT 12246)
18	1	79803719	WASHER, SPRING (GIANT 12223)
9	1	79803720	CUP, 28 MM - GIANT 05005
19	4	79803721	PLUG (GIANT 12098)
19A	4	79803722	O-RING, PLUG (GIANT 12017)
21A	1	79803723	SPACER DISC, .5MM (GIANT 06821)
21B	3	79803724	SPACER DISC, 1.0 MM (GIANT 06822)
24	1	79803725	SERRATED PIN (GIANT 12247)
10	1	79803730	BACK UP O-RING, GIANT 05015

Unloader Repair Kit

79803726

ITEM #	QTY	PART NO.	DESCRIPTION
3	1	79803703	O-RING (GIANT 12057)
2A	1	79803704	GUIDE RING (GIANT 12241)
6	1	79803706	O-RING, VALVE STEM (GIANT 12204)
7	1	79803707	BACKUP RING, VALVE STEM (GIANT 12205)
11	1	79803708	BALL (GIANT 12207)
12	1	79803709	VALVE SPRING (GIANT 12216)
14	1	79803713	VALVE PLATE (GIANT 12244)
14C	2	79803716	O-RING (GIANT 07035)
14D	1	79803717	SPRING, OUTLET VALVE
9	1	79803720	CUP, 28 MM - GIANT 05005
19A	4	79803722	O-RING, PLUG (GIANT 12017)
10	1	79803730	BACK UP O-RING, GIANT 05015

Ultimate Warrior Included & Optional Accessories

PART NO.	DESCRIPTION
73817300	WASH DOWN ACCESSORY KIT
77816000	1/4" x 75' THERMOPLASTIC HOSE
73808602	3/8" x 150' THERMOPLASTIC HOSE
73808600	3/8" x 250' THERMOPLASTIC HOSE
73808603	3/8" x 350' THERMOPLASTIC HOSE
77771100	1/2" x 150' THERMOPLASTIC HOSE
77771200	1/2" x 250' THERMOPLASTIC HOSE
79871600	1/2" X 500' THERMOPLASTIC HOSE
79944100	5/8" X 100' TANK FILL HOSE
77799800	HANDGUN - LANCE ASSEMBLY
77800600	HOSE GUARD (TIGER TAIL)
79873500	HOSE, ANTI - TURNAROUND DEVICE
44256200	JETTING SAFETY GLOVES
77752600	MOBILE HOSE REEL
71109900	TIP CLEANER
77763700	VENTURI PUMP
79824600	REGULAR NOZZLE - CLOSED
79824700	REGULAR NOZZLE - OPEN
79864500	GRENADE NOZZLE
78752100	Q NOZZZLE
78752000	ROCKET NOZZLE
78752200	ROTATING NOZZLE
79990014	WARTHOG NOZZLE (3" - 4" lines)
79921200	WARTHOG NOZZLE (4" - 8" lines)
79922900	WARTHOG NOZZLE (6" - 18" lines
75831010	WARTHOG NOZZLE SERVICE KIT (3-4")
79921210	WARTHOG NOZZLE SERVICE KIT (4-8")
79922910	WARTHOG NOZZLE SERVICE KIT (6-18")
79923400	WARTHOG SKID (6" - 18" lines)
77701401	1/4" TRAP HOSE NOZZLE
79921000	4000 PSI PERFORMANCE NOZZLE KIT

PART NO.	DESCRIPTION
71701700	3/16” X 50’ STAINLESS STEEL TRAP HOSE
71701800	3/16” X 75’ STAINLESS STEEL TRAP HOSE
71702900	3/16” X 100’ STAINLESS STEEL TRAP HOSE
77773903	HYDRO JET FOOT PEDAL
79968600	SANDSHOE NOZZLE
61023600	BEACON ASSEMBLY, (BATTERY OPERATED)
79874000	NOZZLE, BEACON ADAPTER
79824900	1/2” X 15’ RED LEADER HOSE
79825000	12” TURN PROTECTION NIPPLE
79921220	WARTHOG SKID (4" - 8" lines)
77701401	1/4" TRAP HOSE NOZZLE

Section 5
Safety & Regulatory Information
Common to both High Flow & Ultimate Warrior

IMPORTANT INFORMATION COMMON TO ULTIMATE AND HIGH FLOW MODELS

Tire Safety Information..... 92-96

Diesel Engine Emissions.....97

Warranty Information 98

Tire Safety Information

This portion of the User's Manual contains tire safety information as required by 49 CFR 575.6.

The National Traffic Safety Administration (NHTSA) has published a brochure (DOT HS 809 361) that discusses all aspects of Tire Safety, as required by CFR 575.6. It can be obtained and downloaded from NHTSA, free of charge, from the following web site:

http://www.nhtsa.dot.gov/cars/rules/TireSafety/ridesonit/tires_index.html

Tire Safety Terminology Glossary

— **Cold Tire Inflation Pressure** - The pressure in the tire before you drive.

— **Gross Axle Weight Rating (GAWR)** - The maximum weight that any axle can support, as published on the Certification/VIN label on the front left side of the trailer. Actual weight determined by weighing each axle on a public scale, with the trailer attached to the towing vehicle.

— **Gross Vehicle Weight Rating (GVWR)**- The maximum weight of the fully loaded trailer, as published on the Certification / VIN label. Actual weight determined by weighing trailer on a public scale, without being attached to the towing vehicle.

— **Load Rating** - The maximum load that a tire is rated to carry for a given inflation pressure.

— **Maximum Load Rating** - The load rating for a tire at the maximum permissible inflation pressure for that tire.

— **Maximum Permissible Inflation Pressure** - The maximum cold inflation pressure to which a tire may be inflated.

— **Outer Diameter** - The overall diameter of an inflated new tire.

— **Recommended Inflation Pressure** - The inflation pressure provided by the vehicle manufacturer on the Tire Information label and the Certification/VIN tag.

— **Rim** - A metal support for a tire or a tire and tube assembly upon which the tire beads are seated.

— **Vehicle Maximum Load on the Tire** - The load on an individual tire that is determined by distributing to each axle its share of the maximum loaded vehicle weight and dividing by two.

Tire Information Placard

The Spartan Warrior's Federal Certification/VIN label is located on the forward half of the left (road) side of the unit. The VIN label will identify the units GVWR and GAWR.

The Spartan Warrior's Tire Information Placard can be located adjacent to the trailer's VIN (Certification) label at the left front of the trailer. The placard includes the Warrior's tire size, cold tire inflation pressure, and load limitations. The load limitation statement will give an indication of the maximum cargo capacity. Any items (cargo) added to the Warrior must not cause the total weight of the Warrior to exceed the stated GVWR.

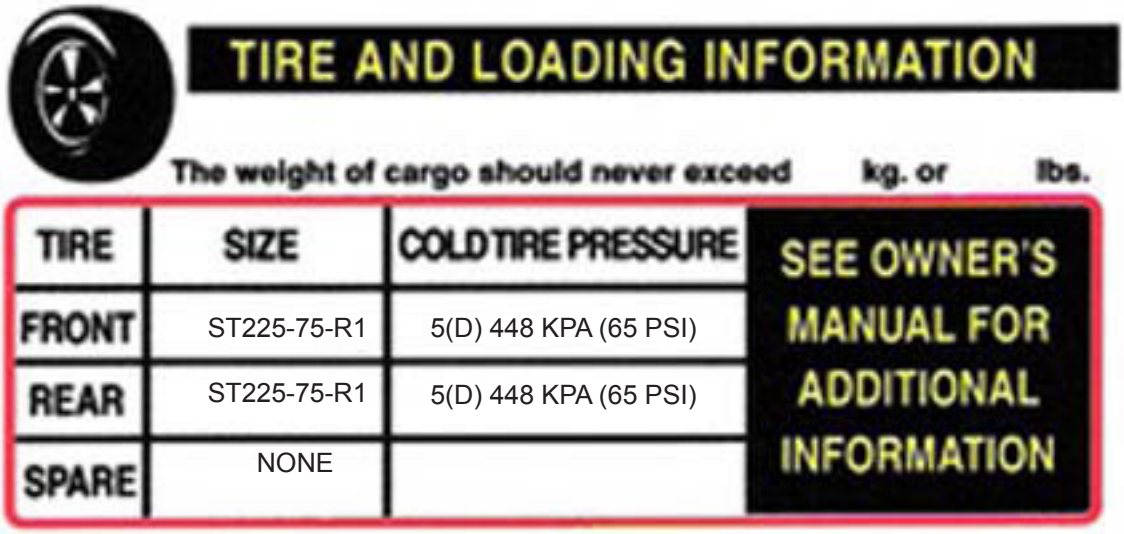

TIRE AND LOADING INFORMATION

The weight of cargo should never exceed kg. or lbs.

TIRE	SIZE	COLD TIRE PRESSURE	SEE OWNER'S MANUAL FOR ADDITIONAL INFORMATION
FRONT	ST225-75-R1	5(D) 448 KPA (65 PSI)	
REAR	ST225-75-R1	5(D) 448 KPA (65 PSI)	
SPARE	NONE		

Tire Safety Information

Steps for Determining Correct Load Limit

— Locate the statement “The weight of cargo should never exceed 2265 kg or 5000 lbs” on your Tire Information Placard.

— This figure equals the available amount of cargo and luggage load capacity.

— Determine the combined weight of luggage and cargo being loaded on the vehicle. That weight may not safely exceed the available cargo and luggage load capacity.

General Tire Information

— Tire inflation pressure is the level of air in the tire that provides the load-carrying capacity and affects the overall performance of the vehicle. The tire inflation pressure is a number that indicates the amount of air pressure a tire requires to be properly inflated. Since tires are designed to be used on more than one type of vehicle, tire manufacturers list the “maximum permissible inflation pressure” on the tire sidewall. This number is the greatest amount of air pressure that should ever be put in the tire under normal driving conditions.

— Improper inflation is the main cause of tire failure. Excessive loads and/or under inflation cause tire overloading, which leads to abnormal tire flexing. Check the cold tire inflation pressures at least once a week for proper inflation levels.

- The proper air pressure may be found on the Certification/VIN label and/or the Tire Information Placard.

— High speed towing in hot conditions degrades the life of the Warrior’s tires. The internal heat generated from high speeds breaks down the tire’s internal structure. It is recommended to drive at moderate speeds.

— If the trailer is stored for an extended period of time, the tires should be fully inflated to the maximum rated pressure. The Warrior should be stored in a cool, dry place. Use tire covers to protect the trailer tires from the harsh effects of the sun.

Tire Maintenance

Checking Tire Pressure

— The recommended tire inflation pressure that vehicle manufacturers provide reflects the proper PSI when a tire is cold. A cold tire is one that has not been driven on for at least three hours. Since driving raises the tires temperature, the internal air pressure also increases. To prevent inflated tire readings, the tire must be measured when cold.

Maintaining Proper Tire Pressure

a. Locate the recommended tire pressure on the vehicle’s Tire Information Placard, Certification Label, or in the Owner’s Manual.

b. Record the tire pressure of all tires.

c. If the tire pressure is too high in any tires, slowly release air by gently pressing on the tire valve stem with the edge of your tire gauge until the correct pressure is reached.

d. If the tire pressure is too low, note the difference between the measured tire pressure and the correct tire pressure. Add the missing pounds of air pressure to each tire that is under inflated.

e. Check all the tires to make sure they have the same air pressure

Note: If the tires are warm due to driving, but testing confirms under inflation, fill the tire to the recommended cold inflation pressure. While the tire may be slightly under inflated due to extra pressure in the warm tire, it is safer to drive a slightly under inflated tire then to drive a significantly under inflated tire. Since this is a temporary fix, the tire must be re-checked and adjusted once a cold reading can be obtained.

Tire Size and Tread

— Tires should be replaced when the tread is worn down 1/16 of an inch.

— Treadwear indicators on the bottom of the tire can be used as a guide. The indicators are raised sections spaced intermittently in the bottom of the tread groves. If they appear even with the outside of the tread, the tire should be replaced.

— Replacement tires should be the same size as the Warrior’s original tires. To prevent error and maintain safety, it is recommended that all replacement parts be purchased through Spartan Tool LLC.

Tire Safety Information

Tire Balance and Wheel Alignment

— Tires must be properly balanced to avoid vibrations and shaking of the trailer. A wheel alignment adjusts the angles of the wheels to position them correctly relative to the trailer's frame. Such adjustments can maximize the life of the tires, but should be performed by a qualified technician.

Tire Repair

— A punctured tire can be repaired by plugging the hole and patching the area that surrounds the puncture hole. A small puncture in the tire tread can be repaired, but punctures to the sidewall should not. Tires should be removed from the rim to be properly inspected before plugging.

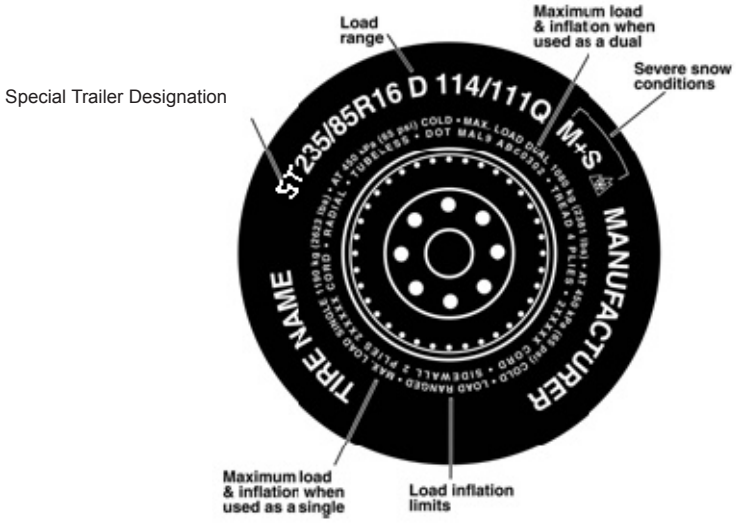

Tire Fundamentals

Federal law requires tire manufacturers to place standardized information on the sidewall of all tires. This information identifies and describes the fundamental characteristics of the tire. It also provides a tire identification number for safety standard certification and in case of a recall.

Tire Safety Tips

Preventing Tire Damage

— Slow down before driving over a pothole or other object in the road

— Do not run over curbs or other foreign objects in the roadway.

Tire Safety Checklist

— Check tire pressure regularly (at least once a month).

— Inspect tires for uneven wear patterns on the tread, cracks, foreign objects, or other signs of wear or trauma.

— Remove bits of glass and foreign objects wedged in the tread.

— Make sure tire valves have valve caps.

— Check tire pressure before any long trips.

— Do not overload trailer. Check the Tire Information Placard for the maximum recommended trailer load.

Tire Safety Information

Confirm that:

- The coupler is secure to the hitch and is locked,
- Electrical connections are made,
- There is appropriate slack in the safety chains,
- There is appropriate slack in the breakaway switch pull-pin cable,
- The tires are not visibly low on pressure, and the cargo is secure and in good condition.

Reporting Safety Defects

If you believe that your vehicle has a defect that could cause a crash or could cause injury or death, you should immediately inform the National Highway Traffic Safety Administration (NHTSA) in addition to notifying Spartan Tool LLC.

If NHTSA receives similar complaints, it may open an investigation, and if it finds that a safety defect exists in a group of vehicles, it may order a recall and remedy campaign. However, NHTSA cannot become involved in individual problems between you, your dealer, or Spartan Tool LLC.

To contact NHTSA, you may either call the Vehicle Safety Hotline toll-free at 1-888-327-4236 (TTY: 1-800- 424-9153), go to http://www.safecar.gov; or write to

Administrator
NHTSA
1200 New Jersey Avenue S.E.
Washington, DC 20590

You can also obtain other information about motor vehicle safety from http://www.safecar.gov.

Spartan Tool LLC
1506 W. Division St.
Mendota, IL 61342

Diesel Engine Emissions

All Kohler Diesel engines are tested to meet emissions standards.
See below for the emissions authentication label.

SAMPLE EMISSIONS LABEL

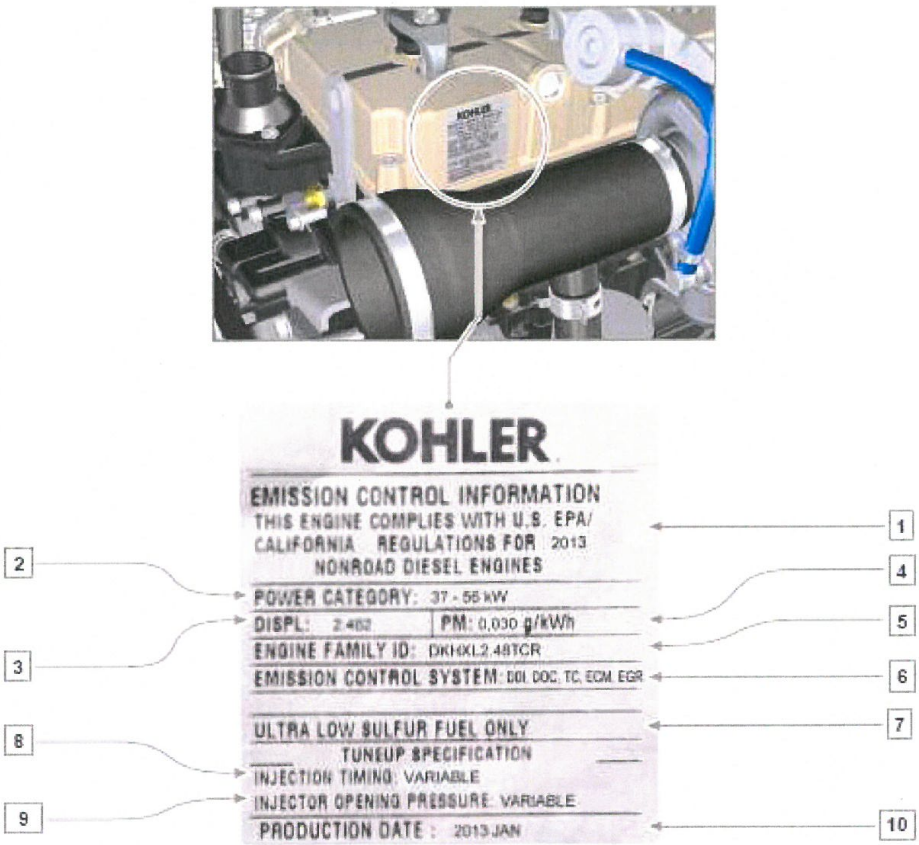

Fig. 83-2

POS.	DESCRIPTION
1	Model year in compliance with the rules
2	Power category (kW)
3	Engine displacement (L)
4	Particulate emission limit (g/kWh)
5	Engine family ID
6	Emission Control System = ECS
7	Fuel with low sulphur content
8	Injection timing (°BTDC)
9	Injector opening pressure (bar)
10	Production date (example: 2013.JAN)

Warranty Information

Spartan Tool warrants its equipment to free from defects in material and workmanship for one year from the date of purchase. To obtain warranty service, a purchaser should notify Spartan Tool in writing, at the address provided below, within the warranty period, and Spartan Tool will direct where to take or send the equipment for service. If the defect is covered by the warranty, Spartan Tool will repair or replace, at its option, the defective equipment, without charge for labor or materials (Freight and insurance are the purchaser's responsibility).

This warranty is limited to the original retail purchaser and is not transferable. Spartan Tool assumes no responsibility for damage due to accident, neglect, abuse, tampering or misuse, nor damage from repairs or alterations by others. This warranty does not cover damage to the equipment resulting from the use of replacement parts other than Spartan Tool parts.

Spartan Tool's sole obligation and the original retail purchaser's exclusive remedy under this warranty shall be for repair or replacement as described above. ALL OTHER WARRANTIES, WHETHER EXPRESSED OR IMPLIED, INCLUDING BUT NOT LIMITED TO IMPLIED WARRANTIES OFMERCHANTABILITY AND FITNESS FOR A PARTICULAR PURPOSE ARE DISCLAIMED. IN NO EVENT SHALL SPARTAN TOOL BE LIABLE FOR ANY INCIDENTAL OR CONSEQUENTIAL DAMAGES.

SPARTAN TOOL L.L.C.

MENDOTA, ILLINOIS 61342

SPARTAN TOOL L.L.C.
1506 W. Division Street
Mendota, IL 61342
800.435.3866 ♦ Fax 888.876.2371
www.spartantool.com