FROSTIG

GB

BCF228/64

Design and Quality
IKEA of Sweden

Contents

Safety information	4	Care and cleaning	14
Product description	6	What to do if…	15
Control panel	8	Technical data	16
First use	10	Installation	16
Daily use	11	Environmental concerns	18
Helpful hints and tips	13	IKEA GUARANTEE	18

Subject to change without notice

⚠ Safety information

In the interest of your safety and to ensure the correct use, before installing and first using the appliance, read this user manual carefully, including its hints and warnings. To avoid unnecessary mistakes and accidents, it is important to ensure that all people using the appliance are thoroughly familiar with its operation and safety features. Save these instructions and make sure that they remain with the appliance if it is moved or sold, so that everyone using it through its life will be properly informed on appliance use and safety.
For the safety of life and property keep the precautions of these user's instructions as the manufacturer is not responsible for damages caused by omission.

Children and vulnerable people safety

- This appliance is not intended for use by persons (including children) with reduced physical, sensory or mental capabilities, or lack of experience and knowledge, unless they have been given supervision or instruction concerning use of the appliance by a person responsible for their safety. Children should be supervised to ensure that they do not play with the appliance.
- Keep all packaging well away from children. There is risk of suffocation.
- If you are discarding the appliance pull the plug out of the socket, cut the connection cable (as close to the appliance as you can) and remove the door to prevent playing children to suffer electric shock or to close themselves into it.
- If this appliance featuring magnetic door seals is to replace an older appliance having a spring lock (latch) on the door or lid, be sure to make that spring lock unusable before you discard the old appliance. This will prevent it from becoming a death trap for a child.

General safety

⚠ **Warning!**

Keep ventilation openings, in the appliance enclosure or in the built-in structure, clear of obstruction.

- The appliance is designed exclusively for domestic use.
- The appliance is intended for keeping foodstuff and/or beverages in a normal household as explained in this instruction booklet.
- Do not use a mechanical device or any artificial means to speed up the thawing process.
- Do not use other electrical appliances (such as ice cream makers) inside of refrigerating appliances, unless they are approved for this purpose by the manufacturer.
- Do not damage the refrigerant circuit.
- The refrigerant isobutane (R600a) is contained within the refrigerant circuit of the appliance, a natural gas with a high level of environmental compatibility, which is nevertheless flammable.
- During transportation and installation of the appliance, be certain that none of the components of the refrigerant circuit become damaged.

If the refrigerant circuit should become damaged:
– avoid open flames and sources of ignition
– thoroughly ventilate the room in which the appliance is situated
- It is dangerous to alter the specifications or modify this product in any way. Any damage to the cord may cause a short-circuit, fire and/or electric shock.

⚠ **Warning!** Any electrical component (power cord, plug, compressor) must be replaced by the After Sales Service agent or qualified service personnel.

1. Power cord must not be lengthened.
2. Make sure that the power plug is not squashed or damaged by the back of the appliance. A squashed or damaged power plug may overheat and cause a fire.
3. Make sure that you can come to the mains plug of the appliance.
4. Do not pull the mains cable.
5. If the power plug socket is loose, do not insert the power plug. There is a risk of electric shock or fire.
6. You must not operate the appliance without the lamp cover[1] of interior lighting.

- This appliance is heavy. Care should be taken when moving it.
- Do not remove nor touch items from the freezer compartment if your hands are damp/wet, as this could cause skin abrasions or frost/freezer burns.
- Avoid prolonged exposure of the appliance to direct sunlight.
- Bulb lamps[2]used in this appliance are special purpose lamps selected for household appliances use only. They are not suitable for household room illumination.

Daily Use

- Do not put hot pot on the plastic parts in the appliance.
- Do not store flammable gas and liquid in the appliance, because they may explode.
- Do not place food products directly against the air outlet on the rear wall.[3]
- Frozen food must not be re-frozen once it has been thawed out.
- Store pre-packed frozen food in accordance with the frozen food manufacturer's instructions.
- Appliance's manufacturers storage recommendations should be strictly adhered to.
- Do not place carbonated or fizzy drinks in the freezer compartment as it creates pressure on the container, which may cause it to explode, resulting in damage to the appliance.
- Ice lollies can cause frost burns if consumed straight from the appliance.

Care and cleaning

- Before maintenance, switch off the appliance and disconnect the mains plug from the mains socket.
- Do not clean the appliance with metal objects.
- In case of accidental frost built-up (the product is a no frost type), do not use sharp objects to remove frost from the appliance. Use a plastic scraper.
- Regularly examine the drain in the refrigerator for defrosted water. If necessary, clean the drain. If the drain is blocked, water will collect in the bottom of the appliance.

Installation

Important! For electrical connection carefully follow the instructions given in the specific paragraph.

- Unpack the appliance and check if there are damages on it. Do not connect the appliance if it is damaged. Report possible damages immediately to the After Sales Service (refer to "Service"). In that case retain packing.

1) If the lamp cover is foreseen
2) If the lamp is foreseen
3) If the appliance is Frost Free

- It is advisable to wait at least four hours before connecting the appliance to allow the oil to flow back in the compressor.
- Adequate air circulation should be around the appliance, lacking this leads to overheating. To achieve sufficient ventilation follow the instructions relevant to installation.
- Wherever possible the back of the product should be against a wall to avoid touching or catching warm parts (compressor, condenser) to prevent possible burn.
- The appliance must not be located close to radiators or cookers.
- Make sure that the mains plug is accessible after the installation of the appliance.

Service

- Any electrical work required to do the servicing of the appliance should be carried out by a qualified electrician or competent person.
- This product must be serviced by the After Sales Service, and only genuine spare parts must be used. The service numbers are listed in the Service information.

Environment Protection

This appliance does not contain gasses which could damage the ozone layer, in either its refrigerant circuit or insulation materials. The appliance shall not be discarded together with the urban refuse and rubbish. The insulation foam contains flammable gases: the appliance shall be disposed according to the applicable regulations to obtain from your local authorities. Avoid damaging the cooling unit, especially at the rear near the heat exchanger. The materials used on this appliance marked by the symbol ♲ are recyclable.

Product description

Carefully read the operating instructions before using the appliance.

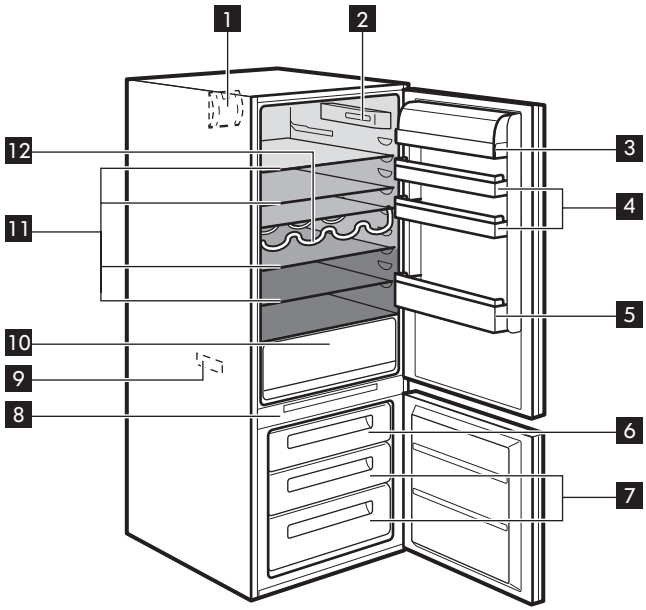

1 Fan
2 Led light
3 Butter and cheese compartment with lid
4 Can shelves
5 Bottle shelf
6 Freezing drawer
7 Freezer drawers
8 Control panel
9 Rating plate
10 Vegetable drawer
11 Storage shelves
12 Bottle rack

Least cold zone
Intermediate temperature zone
Coldest zone

Control panel

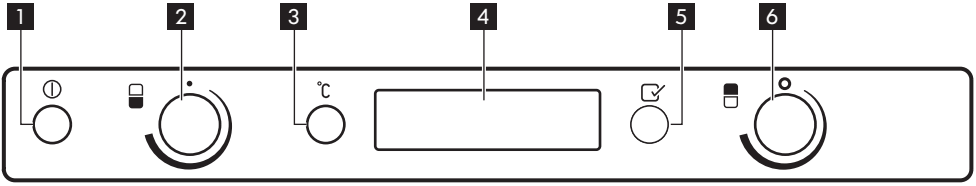

1 ON/OFF switch
2 Freezer temperature regulator
3 Fridge-Freezer temperature indication button
4 Display
5 Function button
Alarm reset switch
6 Fridge temperature regulator

Display

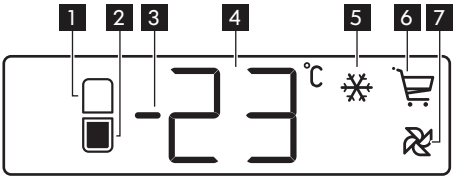

1 Fridge compartment indicator
2 Freezer compartment indicator
3 Positive or negative temperature indicator
4 Temperature indicator
5 Action Freeze function
6 Shopping function
7 Fan function

Switching on

After plugging the plug into the power outlet, if the display is not illuminated, press ON/OFF switch.
As soon as the appliance is turned on, the following signals will appear on the control panel:

- Positive or negative temperature indicator will be positive, indicating that the temperature is positive
- the temperature flashes, the background of the display is red and you will hear a buzzer.

Press Function button and the buzzer will go off (also refer to "Excessive temperature alarm") .
Set the desired temperature (refer to "Temperature regulation").

Switching off

The appliance is shut off by pressing ON/OFF switch for more than 1 second.
After this, a countdown of the temperature from -3 -2 -1 will be shown.
When the appliance is switched off, Display also goes off.

Temperature Indication

Each time the Fridge-Freezer temperature indication button is pressed, the display indicates in sequence:

1. – The Fridge compartment indicator is on.
   – The display indicates the latest set temperature for the fridge.
2. – The Freezer compartment indicator is on.[4)]
   – The display indicates the latest set temperature for the freezer.

Functions menu

Each time Function button is pressed, the following functions are activated in a clockwise direction:

- Action Freeze function
- Shopping function
- Fan function
- no symbol: normal operation.

Important! You can set one function ON at any time.

To set the functions OFF, press the Function button several times until no icon appears.

Temperature regulation

The temperature within the appliance is controlled by the Temperature regulator.
The temperature of the fridge compartment may be regulated by rotating the Fridge temperature regulator, and may vary between more or less +2°C and +8°C.
The temperature of the freezer compartment may be regulated by rotating the Freezer temperature regulator, and may vary between more or less -15°C and -24°C.
By turning the Temperature regulator, the display flashes and shows the desired temperature.
For a correct storage of the food the following temperatures should be set:
+5°C in the fridge
-18°C in the freezer.

After having set the desired temperature, if the Temperature regulator is not rotated within 5 seconds, the latest set temperature for the freezer compartment will be shown.
To operate the appliance, proceed as follows:

- turn the Temperature regulator clockwise to obtain the maximum coldness
- turn the Temperature regulator counterclockwise to obtain the minimum coldness.

The intermediate position is usually the most suitable.
However, the exact setting should be chosen keeping in mind that the temperature inside the appliance depends on:

- room temperature
- how often the door is opened
- the quantity of food stored
- the location of the appliance.

Shopping Function

If you need to insert a large amount of warm food, for example after doing the grocery shopping, we suggest activating the Shopping function to chill the products more rapidly and to avoid warming the other food which is already in the refrigerator.
The Shopping function is activated by pressing Function button (several times if necessary) until the corresponding icon appears .
The Shopping function shuts off automatically after approximately 6 hours.
During the Shopping function also the fan inside the refrigerator compartment is automatically activated.

Important! The fan inside the refrigerator compartment is automatically activated also when the room temperature is high (over 32°C), even though the Shopping function is not activated.

It is possible to de-activate the function at any time by pressing Function button (refer to "Functions Menu").

4) In normal conditions.

Fan Function

The function is activated by pressing the Function button (several times if necessary) until the corresponding icon appears . ⊛
In this condition the fan works continuosly.
It is possible to deactivate the function at any time by pressing the Function button until the icon ⊛ goes out of view.

Important! If the function is activated automatically the fan icon is not shown (refer to "Daily use").
The activation of the fan function increases the energy consumption.

Action Freeze Function

To freeze fresh foods, you will need to activate the Action Freeze function. Press Function button (several times if necessary) until the corresponding icon appears.
This function stops automatically after 52 hours.
It is possible to deactivate the function at any time by pressing Function button (refer to "Functions Menu").

Excessive temperature alarm

An increase in the temperature in the freezer compartment (for example due to a power failure) is indicated by:

- flashing temperature
- freezer compartment flashing (Freezer compartment indicator / Door open alarm indicator)
- red illumination of display
- sounding of buzzer

When normal conditions are restored:

- the acoustic signal shuts off
- the temperature value continues to flash
- the display illumination remains red.

When you press Function button / Alarm reset switch to deactivate the alarm, the highest temperature reached in the compartment appears on indicator 88 for some seconds.
At this point the flashing stops and the display illumination changes over from red to white.
During the alarm, the buzzer can be switched off by pressing Function button / Alarm reset switch.
The illumination of the display remains red until normal storage conditions are restored.

First use

Cleaning the interior

Before using the appliance for the first time, wash the interior and all internal accessories with lukewarm water and some neutral soap so as to remove the typical smell of a brand-new product, then dry thoroughly.

Important! Do not use detergents or abrasive powders, as these will damage the finish.

Daily use

Accessories

Egg tray

x1

Ice tray

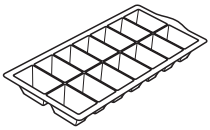

x1

Freezer blocks

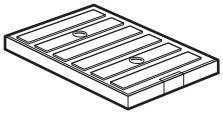

x2

Movable shelves

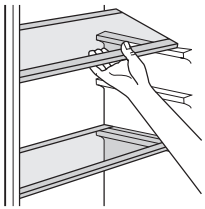

The walls of the refrigerator are equipped with a series of runners so that the safety glass shelves can be positioned as desired.

Important! Do not move the glass shelf above the vegetable drawer to ensure correct air circulation.

Positioning the door shelves

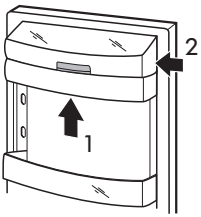

To permit storage of food packages of various sizes, the door shelves can be placed at different heights.
To make these adjustments proceed as follows: gradually pull upwards the shelf until it comes free (1), remove it by pushing towards inside (2), then reposition as required.

Vegetable Drawer

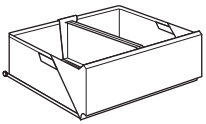

The drawer is suitable for storing fruit and vegetables.
There is a separator inside the drawer that can be placed in different positions to allow for the subdivision best suited to personal needs.
There is a grille (if foreseen) on the bottom of the drawer to separate the fruit and vegetables from any humidity that may form on the bottom surface.
All parts inside the drawer can be removed for cleaning purposes.

Fan

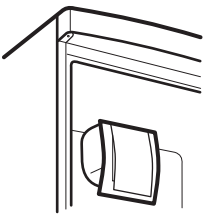

The refrigerator compartment is equipped with a device that allows for rapid cooling of foods and more uniform temperature in the compartment.
This device activates by itself when needed, for example for a quick temperature recovering after door opening or when the ambient temperature is high.
Allows you to switch on the device manually when needed (refer to "Fan Function").

Important! The device stops when the door is open and restarts immediately after the door closing.

Freezing fresh food

The freezer compartment is suitable for freezing fresh food and storing frozen and deep-frozen food for a long time.
To freeze fresh food activate the Action Freeze function at least 24 hours before placing the food to be frozen in the freezer compartment.
Place the fresh food to be frozen in the upper drawer, as this is the coldest point.
The maximum amount of food that can be frozen in 24 hours is specified on the rating plate, a label located on the inside of the appliance.
The freezing process lasts 24 hours: during this period do not add other food to be frozen.

Freezing Calendar

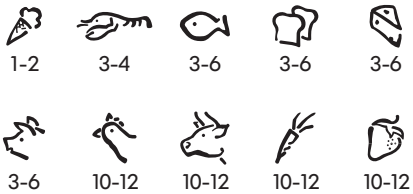

The symbols show different types of frozen goods.
The numbers indicate storage times in months for the appropriate types of frozen goods. Whether the upper or lower value of the indicated storage time is valid depends on the quality of the foods and treating before freezing.

Storage of frozen food

When first starting-up or after a period out of use, before putting the products in the compartment let the appliance run at least 12 hours on the Action Freeze setting.

If large quantities of food are to be stored, remove all drawers from appliance and place food on glass shelf to obtain the best performance.

Important! In the event of accidental defrosting, for example due to a power failure, if the power has been off for longer that the value shown in the technical characteristics chart under "rising time", the defrosted food must be consumed quickly or cooked immediately and then re-frozen (after cooling).

Thawing

Deep-frozen or frozen food, prior to being used, can be thawed in the refrigerator compartment or at room temperature, depending on the time available for this operation.
Small pieces may even be cooked still frozen, directly from the freezer: in this case, cooking will take longer.

Ice-cube production

This appliance is equipped with one tray for the production of ice-cubes.
1. Fill the tray with water.
2. Put the tray in the freezer compartment

Important! Do not use metallic instruments to remove the tray from the freezer.

Freezer Blocks

Two freezer blocks are supplied in the freezer; this increase the length of time for which food will keep in the event of a power failure or breakdown.

Helpful hints and tips

Hints for energy saving

- Do not open the door frequently or leave it open longer than absolutely necessary.
- If the ambient temperature is high, the temperature regulator is on the higher setting and the appliance is fully loaded, the compressor may run continuously, causing frost or ice on the evaporator. If this happens, turn the temperature regulator toward lower settings to allow automatic defrosting and so a saving in electricity consumption.

Hints for fresh food refrigeration

To obtain the best performance:

- Do not store warm food or evaporating liquids in the refrigerator.
- Do cover or wrap the food, particularly if it has a strong flavour.
- Position food so that air can circulate freely around it.

Hints for refrigeration

- Meat (all types) : wrap in polythene bags and place on the glass shelf above the vegetable drawer.
  For safety, store in this way only one or two days at the most.
- Cooked foods, cold dishes, etc.: these should be covered and may be placed on any shelf.
- Fruit and vegetables: these should be thoroughly cleaned and placed in the drawer.
- Butter and cheese: these should be placed in special airtight containers or wrapped in aluminium foil or polythene bags to exclude as much air as possible.
- Milk bottles: these should have a cap and should be stored in the bottle rack on the door.
- Bananas, potatoes, onions and garlic: if not packed, must not be kept in the refrigerator.

Hints for freezing

To help you make the most of the freezing process, here are some hints:

- The maximum quantity of food which can be frozen in 24 hours is shown on the rating plate.
- The freezing process takes 24 hours. No further food to be frozen should be added during this period.
- Freeze only top quality, fresh and thoroughly cleaned foodstuffs.
- Prepare food in small portions to enable it to be rapidly and completely frozen and to make it possible subsequently to thaw only the quantity required.
- Wrap up the food in aluminium foil or polythene and make sure that the packages are airtight.
- Do not allow fresh, unfrozen food to touch food which is already frozen, thus avoiding a rise in temperature of the latter.
- Lean foods store better and longer than fatty ones; salt reduces the storage life of food.
- Water ices, if consumed immediately after removal from the freezer compartment, can possibly cause the skin to be freeze burnt.
- It is advisable to show the freezing in date on each individual pack to enable you to keep tab of the storage time.

Hints for storage of frozen food

To obtain the best performance from this appliance, you should:

- Make sure that the commercially frozen foodstuffs were adequately stored by the retailer.
- Make sure that frozen foodstuffs are transferred from the foodstore to the freezer in the shortest possible time.
- Do not open the door frequently or leave it open longer than absolutely necessary.
- Once defrosted, food deteriorates rapidly and cannot be refrozen.
- Do not exceed the storage period indicated by the food manufacturer.

Care and cleaning

⚠ **Caution!** Before carrying out any maintenance operation, disconnect the power supply.

This appliance contains hydrocarbons in its cooling unit; maintenance and recharging must therefore only be carried out by authorized technicians.

⚠ **Warning!** The accessories and parts of the appliance are not suitable for washing in a dishwasher.

Periodic cleaning

The equipment has to be cleaned regularly:
- clean the inside and accessories with lukewarm water and some neutral soap.
- regularly check the door seals and wipe clean to ensure they are clean and free from debris.
- rinse and dry thoroughly.

Important! Do not pull, move or damage any pipes and/or cables inside the cabinet. Never use detergents, abrasive powders, highly perfumed cleaning products or wax polishes to clean the interior as this will damage the surface and leave a strong odour.

Clean the condenser (black grill) and the compressor at the back of the appliance with a brush . This operation will improve the performance of the appliance and save electricity consumption.

Important! Take care of not to damage the cooling system.

Many proprietary kitchen surface cleaners contain chemicals that can attack/damage the plastics used in this appliance. For this reason it is recommended that the outer casing of this appliance is only cleaned with warm water with a little washing-up liquid added.
After cleaning, reconnect the equipment to the mains supply.

Defrosting of the refrigerator

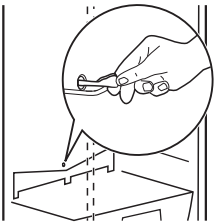

Frost is automatically eliminated from the evaporator of the refrigerator compartment every time the motor compressor stops, during normal use. The defrost water drains out through a trough into a special container at the back of the appliance, over the motor compressor, where it evaporates. It is important to periodically clean the defrost water drain hole in the middle of the refrigerator compartment channel to prevent the water overflowing and dripping onto the food inside. Use the special cleaner provided, which you will find already inserted into the drain hole.

No defrosting of the freezer

The freezer compartment of this model, on the other hand, is a "no frost" type. This means that there is no buildup of frost when it is in operation, neither on the internal walls nor on the foods.
The absence of frost is due to the continuous circulation of cold air inside the compartment, driven by an automatically controlled fan.

Periods of non-operation

When the appliance is not in use for long periods, take the following precautions:
1. Disconnect the appliance from electricity supply.
2. Remove all food.
3. Defrost, if foreseen
4. Clean the appliance and all accessories.
5. Leave all doors ajar to prevent unpleasant smells.

If the cabinet will be kept on, ask somebody to check it once in a while to prevent the food inside from spoiling in case of a power failure.

What to do if…

⚠ **Caution!** Before troubleshooting, disconnect the power supply.
Only a qualified electrician or competent person must do the troubleshooting that is not in this manual.

Important! There are some sounds during normal use (compressor, refrigerant circulation).

Problem	Possible cause	Solution
The appliance is noisy.	The appliance is not installed properly.	Check if the appliance stands stable (all the feet should be on the floor).
The appliance does not operate. The lamp does not operate.	The appliance is switched off.	Switch on the appliance.
	The plug is not connected to the mains socket correctly.	Connect the plug to the mains socket correctly.
	The appliance has no power. There is no voltage in the mains socket.	Connect a different electrical appliance to the mains socket. Contact a qualified electrician.
The lamp does not work.	The lamp is defective.	Refer to "Replacing the lamp".
The compressor operates continually.	The temperature is not set correctly.	Set a higher temperature.
	The door is not closed correctly.	Refer to "Closing the door".
	The door has been opened too frequently.	Do not keep the door open longer than necessary.
	The food temperature is too high.	Let the food temperature decrease to room temperature before storage.
	The room temperature is too high.	Decrease the room temperature.
Water flows on the rear plate of the refrigerator.	During the automatic defrosting process, frost defrosts on the rear plate.	This is correct.
Water flows into the refrigerator.	The water outlet is clogged.	Clean the water outlet.
	Products prevent that water flows into the water collector.	Make sure that products do not touch the rear plate.
Water flows on the ground.	The melting water outlet does not flow in the evaporative tray above the compressor.	Attach the melting water outlet to the evaporative tray.

Problem	Possible cause	Solution
The temperature in the appliance is too low/ high.	The temperature regulator is not set correctly.	Set a higher/lower temperature.

If your appliance is still not working properly after making the above checks, contact the After Sales Centre. You can find the list at the end of this manual.

Replacing the lamp

The appliance is equipped with a longlife LED interior light.

Only service is allowed to replace the lighting device. Contact your Service Center .

Closing the door

1. Clean the door gaskets.
2. If necessary, replace the defective door gaskets. Contact the After Sales Service.

Technical data

Dimensions	
Height	1827 mm
Width	540 mm
Depth	552 mm
Net Volume	
Fridge	228 Litre
Freezer	64 Litre
Defrost System	
Fridge	auto
Freezer	auto

Star Rating	********
Rising Time	21 hours
Freezing Capacity	8 kg/24h
Energy Consumption	0,893 kWh/24h
Noise Level	39 dB (A)
Energy Class	A+

The technical information are situated in the rating plate on the internal left side of the refrigerator compartment and in the energy label.

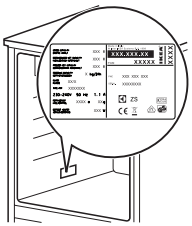

Installation

⚠ **Caution!** Read the "Safety Information" carefully for your safety and correct operation of the appliance before installing the appliance.

Important! Refer to the assembly instructions for the installation.

Location

To ensure best performance, install the appliance well away from sources of heat such as radiators, boilers, direct sunlight etc. Make sure that air can circulate freely around the back of the cabinet.

Positioning

This appliance can be installed in a dry, well ventilated indoor (garage or cellar) also, but for optimum performance install this appliance at a location where the ambient temperature corresponds to the climate class indicated on the rating plate of the appliance:

Climate class	Ambient temperature
SN	+10°C to + 32°C
N	+16°C to + 32°C
ST	+16°C to + 38°C
T	+16°C to + 43°C

Electrical Connection

⚠ **Caution!** Any electrical work required to install this appliance should be carried out by a qualified electrician or competent person.

⚠ **Warning!** This appliance must be earthed.

The manufacturer declines any liability should these safety measures not be observed.

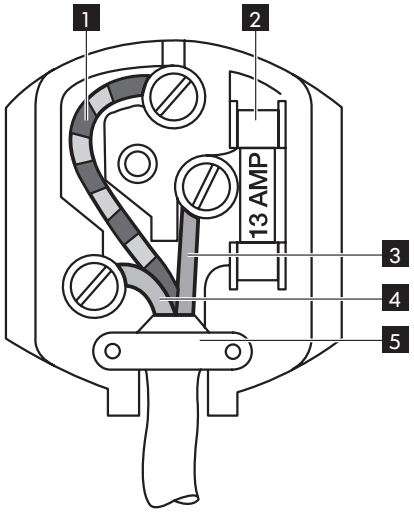

Important! The wires in the mains lead are coloured in accordance with the following code:

1	Green and Yellow:	Earth
3	Brown:	Live
5	Blue:	Neutral

As the colours of the wires in the mains lead of this appliance may not correspond with the coloured markings identifying the terminals in your plug, proceed as follows:

1. Connect the wire coloured green and yellow to the terminal marked either with the letter “E“ or by the earth symbol ⏚ or coloured green and yellow.
2. Connect the wire coloured blue to the terminal either marked with the letter “N“ or coloured black.
3. Connect the wire coloured brown to the terminal either marked with the “L“ or coloured red.
4. Check that no cut, or stray strands of wire is present and the cord clamp 4 is secure over the outer sheath.
5. Make sure the electricity supply voltage is the same as that indicated on the appliance rating plate.
6. Switch on the appliance.

The appliance is supplied with a 13 amp plug fitted 2 . In the event of having to change the fuse in the plug supplied, a 13 amp ASTA approved (BS 1362) fuse must be used.

⚠ **Warning!** A cut off plug inserted into a 13 amp socket is a serious safety (shock) hazard. Ensure that it is disposed of safely.

CE

Environmental concerns

The symbol on the product or on its packaging indicates that this product may not be treated as household waste. Instead it should be taken to the appropriate collection point for the recycling of electrical and electronic equipment. By ensuring this product is disposed of correctly, you will help prevent potential negative consequences for the environment and human health, which could otherwise be caused by inappropriate waste handling of this product. For more detailed information about recycling of this product, please contact your local council, your household waste disposal service or the shop where you purchased the product.

Packaging materials

The materials with the symbol are recyclable. Dispose the packaging in a suitable collection container to recycle it.

IKEA GUARANTEE

How long is the IKEA guarantee valid?

This guarantee is valid for five (5) years from the original date of purchase of Your appliance at IKEA, unless the appliance is named LAGAN in which case two (2) years of guarantee apply. The original sales receipt is required as proof of purchase. If service work is carried out under guarantee, this will not extend the guarantee period for the appliance,

Which appliances are not covered by the IKEA five (5) years guarantee?

The range of appliances named LAGAN and all appliances purchased in IKEA before 1st of August 2007

Who will execute the service?

IKEA service provider will provide the service through its own service operations or authorized service partner network.

What does this guarantee cover?

The guarantee covers faults of the appliance, which have been caused by faulty construction or material faults from the date of purchase from IKEA. This guarantee applies to domestic use only. The exceptions are specified under the headline “What is not covered under this guarantee?” Within the guarantee period, the costs to remedy the fault e.g. repairs, parts, labour and travel will be covered, provided that the appliance is accessible for repair without special expenditure. On these conditions the EU guidelines (Nr. 99/44/EG) and the respective local regulations are applicable. Replaced parts become the property of IKEA.

What will IKEA do to correct the problem?

IKEA appointed service provider will examine the product and decide, at its sole discretion, if it is covered under this guarantee. If considered covered, IKEA service provider or its authorized service partner through its own service operations, will then, at its sole discretion, either repair the defective product or replace it with the same or a comparable product.

What is not covered under this guarantee?

- Normal wear and tear.

- Deliberate or negligent damage, damage caused by failure to observe operating instructions, incorrect installation or by connection to the wrong voltage, damage caused by chemical or electro-chemical reaction, rust, corrosion or water damage including but not limited to damage caused by excessive lime in the water supply, damage caused by abnormal environmental conditions.
- Consumable parts including batteries and lamps.
- Non-functional and decorative parts which do not affect normal use of the appliance, including any scratches and possible color differences.
- Accidental damage caused by foreign objects or substances and cleaning or unblocking of filters, drainage systems or soap drawers.
- Damage to the following parts: ceramic glass, accessories, crockery and cutlery baskets, feed and drainage pipes, seals, lamps and lamp covers, screens, knobs, casings and parts of casings. Unless such damages can be proved to have been caused by production faults.
- Cases where no fault could be found during a technician's visit.
- Repairs not carried out by our appointed service providers and/or an authorized service contractual partner or where non-original parts have been used.
- Repairs caused by installation which is faulty or not according to specification.
- The use of the appliance in a non-domestic environment i.e. professional use.
- Transportation damages. If a customer transports the product to their home or other address, IKEA is not liable for any damage that may occur during transport. However, if IKEA delivers the product to the customer's delivery address, then damage to the product that occurs during this delivery will be covered by this guarantee.
- Cost for carrying out the initial installation of the IKEA appliance. However, if an IKEA service provider or its authorized service partner repairs or replaces the appliance under the terms of this guarantee, the service provider or its authorized service partner will re-install the repaired appliance or install the replacement, if necessary.

This restriction do not apply to fault-free work carried out by a qualified specialist using our original parts in order to adapt the appliance to the technical safety specifications of another EU country.

How country law applies

The IKEA guarantee gives You specific legal rights, which covers or exceed local demands. However these conditions do not limit in any way consumer rights described in the local legislation

Area of validity

For appliances which are purchased in one EU country and taken to another EU country, the services will be provided in the framework of the guarantee conditions normal in the new country. An obligation to carry out services in the framework of the guarantee exists only if the appliance complies and is installed in accordance with:

- the technical specifications of the country in which the guarantee claim is made;
- the Assembly Instructions and User Manual Safety Information;

The dedicated After Sales Service for IKEA appliances:

Please do not hesitate to contact IKEA After Sales Service to:

1. make a service request under this guarantee;
2. ask for clarification on installation of the IKEA appliance in the dedicated IKEA kitchen furniture. The service won't provide clarifications related to:
   - the overall IKEA kitchen installation;
   - connections to electricity (if machine comes without plug and cable), to water and to gas since they have to be executed by an authorized service engineer.

3. ask for clarification on user manual contents and specifications of the IKEA appliance.

To ensure that we provide you with the best assistance, please read carefully the Assembly Instructions and/or the User Manual section of this booklet before contacting us.

How to reach us if You need our service

Please refer to the last page of this manual for the full list of IKEA appointed contacts and relative national phone numbers.

Important! In order to provide You with a quicker service, we recommend that You use the specific phone numbers listed at the end of this manual. Always refer to the numbers listed in the booklet of the specific appliance You need an assistance for. Before calling us, assure that You have to hand the IKEA article number (8 digit code) for the appliance of which you need our assistance.

Important! SAVE THE SALES RECEIPT! It is Your proof of purchase and required for the guarantee to apply. Note that the receipt reports also the IKEA article name and number (8 digit code) for each of the appliances you have purchased.

Do You need extra help?

For any additional questions not related to After Sales of your appliances, please contact our nearest IKEA store call centre. We recommend you read the appliance documentation carefully before contacting us.

Country	Phone number	Call Fee	Opening time
België	070 246016	Binnenlandse gesprekskosten	8 tot 20 Weekdagen
Belgique		Tarif des appels nationaux	8 à 20. En semaine
България	0700 10 218	Такса за повикване от страната	От 9 до 18 ч в работни дни
Česká republika	246 019721	Cena za místní hovor	8 až 20 v pracovních dnech
Danmark	70 15 09 09	Landstakst	man.-fre. 09.00-20.00 lør. 09.00-16.00 1 søndag pr. måned, normalt første søndag i måneden
Deutschland	01803-334532	(0,09 € / Min.*) * aus dem Festnetz der DTAG; Mobilfunkpreise abweichend	8 bis 20 Werktage
Ελλάδα	211 176 8276	Υπεραστική κλήση	8 έως 20 κατά τις εργάσιμες ημέρες
España	91 1875537	Tarifa de llamadas nacionales	De 8 a 20 en días laborables
France	0170 36 02 05	Tarif des appels nationaux	9 à 21. En semaine
Ireland	0 14845915	National call rate	8 till 20 Weekdays
Ísland	5880503	Innanlandsgjald fyrir síma	9 til 18. Virka daga
Italia	02 00620818	Tariffa applicata alle chiamate nazionali	dalle 8 alle 20 nei giorni feriali
Κυπρος	22 030 529	Υπεραστική κλήση	8 έως 20 κατά τις εργάσιμες ημέρες
Magyarország	061 998 0549	Belföldi díjszabás	Hétköznap 8 és 10 óra között
Nederland	0900 235 45 32 and/or 0900 BEL IKEA	"0,10 EUR/min (niet lokaal) Incl. BTW"	ma-vr 9.00-21.00 zat 9.00-20.00 zon 9.00-18.00
Norge	815 22052	Takst innland	8 til 20 ukedager
Österreich	0810 300486	zum Ortstarif	8 bis 20 Werktage
Polska	012 297 8787	Stawka wg taryfy krajowej	Od 8 do 20 w dni robocze
Portugal	211557985	Chamada Nacional	9 às 21. Dias de Semana *excepto feriados
România	0212121224	Tarif apel național	8 - 20 în zilele lucrătoare
Россия	8 495 6662929	Действующие телефонные тарифы	с 8 до 20 по рабочим дням Время московское
Schweiz	031 5500 324	Tarif für Anrufe im Bundesgebiet	8 bis 20 Werktage
Suisse		Tarif des appels nationaux	8 à 20. En semaine
Svizzera		Tariffa applicata alle chiamate nazionali	dalle 8 alle 20 nei giorni feriali
Slovensko	(02) 3300 2554	Cena vnútroštátneho hovoru	8 až 20 v pracovných dňoch
Suomi	0207 85 1000	Kotimaan puhelun hinta	arkipäivisin 8.00-20.00
Sverige	0775 700 500	lokalsamtal (lokal taxa)	mån-fre 8.30-20.00 lör-sön 9.30-18.00
Türkiye	212 244 0769	Ulusal arama ücreti	Hafta içi saat 09:00'dan 18:00'a kadar
Україна	044 586 2078	Міжміськи дзвінки платні	9 - 21 В робочі дні
United Kingdom	020 3347 0044	National call rate	9 till 21. Weekdays

222357961-A-052011

© Inter IKEA Systems B.V. 2008 AA-504215-1