About this manual

■ Description of technical terms

The terms in this manual are defined as follows:

Servodrive is used to drive and control servo motor.

Servo System means a servo control system that includes the combination of a servodrive, servo motor with a host computer and peripheral devices.

Parameters include monitoring parameter and setting parameters. Monitoring parameters can only be checked, but not be modified, and setting parameters can be checked and modified, which includes function parameters and data parameters.

■ Common symbol

The following symbols are used for convenience.

1. Instruction

<table>
<tr><td rowspan="2">**P**: position mode</td><td>**Pt**：position pulse mode</td><td rowspan="6">**ALL**: all modes</td></tr>
<tr><td>**Pr**：internal register position mode</td></tr>
<tr><td rowspan="2">**S**: speed mode</td><td>**Sr**：internal register speed mode</td></tr>
<tr><td>**Sz**：analog speed mode</td></tr>
<tr><td rowspan="2">**T**: torque mode</td><td>**Tr**：internal register torque mode</td></tr>
<tr><td>**Tz**：analog torque mode</td></tr>
</table>

2. Usage of backslash (/)

Backslash is used in the wiring diagram. It describes the default logic of I/O interface.

For input signal(DI terninal), balckslash means, when input circuit is ON status, the input signal is valid, i.e. the default logic is positive logic. Without blackslash means, when input side is OFF status, the input signal is valid, i.e. the default logic is negative logic.

For output signal(DO terminal), backslash means output side circuit is common-opened, and when the signal is output, the output side circuit is closed. Without backslash means output side circuit is common-closed, and when the signal is output, the output side circuit is opened.

3. Others

NC: no connection

N/A: no unit

CONTENTS

I. Summary 1

1.1 PRODUCT CHECK 1
1.1.1 Unpacking check 1
1.1.2 Servo Drive Nameplate 2
1.1.3 Servo Motor Nameplate 2
1.2 SERVO DRIVE FEATURES 3
1.2.1 SERVO DRIVE FEATURES 3
1.2.2 SERVO MOTOR FEATURES 3
1.3 CONNECTION TO PERIPHERAL DEVICES 4

II. Model Selection 5

2.1 MODEL SELECTION FOR SERVO DRIVES 5
2.1.1 Servo Drive naming rule 5
2.1.2 SERVO DRIVE SPECIFICATIONS 6
2.1.3 Servo drives installation dimensions 7
2.2 MODEL SELECTION FOR SERVO MOTOR 11
2.2.1 Servo motor naming rule 11

III. Installation 12

3.1 SERVO DRIVES INSTALLATION 12
3.1.1 Installation conditions 12
3.1.2 Servo drives installation method 12
3.1.3 Installation procedure and minimum clearances 14
3.2 SERVO MOTOR INSTALLATION 15
3.2.1 Servo motor installation conditions 15
3.2.2 Servo motor installation method 15

IV. Wiring 16

4.1 MAIN CIRCUIT WIRING 17
4.1.1 Main circuit terminals 17
4.1.2 Main circuit terminal wiring 18
4.1.3 Typical main circuit wiring examples 19
4.1.4 Choke wiring 20
4.2 ENCODER WIRING 21

4.2.1 Encoder Connector Terminal Layout 21
4.2.2 Encoder connector terminal 21
4.3 I/O SIGNAL WIRING 22
4.3.1 I/O Signal Connector Terminal Layout 22
4.3.2 I/O Signal Names and Functions 23
4.4 I/O SIGNAL INTERFACE CIRCUIT 25
4.4.1 On-off input interface 25
4.4.2 On-off output interface 26
4.4.3 Command pulse input interface 27
4.4.4 Encoder pulse frequency-division output interface 29
4.4.5 Analog command input interface 30
4.4.6 Analog monitor output interface 31
4.4.7 Malfunction code output interface 31
4.5 FUNCTION SETTING AND STATUS MONITOR OF PROGRAMMABLE I/O SIGNAL 32
4.5.1 Function setting of programmable input signal terminal 32
4.5.2 Function setting of programmable output terminal 34
4.5.3 Input terminal default function in all mode 35
4.5.4 Output terminal default function in all mode 36
4.5.5 Status of monitor I/O terminal 36
4.6 EXAMPLE OF I/O SIGNAL (CN3) CONNECTIONS 38
4.6.1 Example of analog speed mode 38
4.6.2 Example of position pulse mode 39
4.6.3 Example of internal register position mode 40
4.6.4 Example of analog torque mode 41
4.6.5 Example of internal register speed mode 42
4.6.6 Example of internal register torque mode 43
4.7 WIRING OF ELECTROMAGNETIC BRAKE 44
4.8 WIRING WHEN USING MORE THAN ONE SERVO 45

V. Operation and parameters 46

5.1 DESCRIPTION OF THE DIGITAL KEYPAD 46
5.1.1 INSTRUCTION OF DIGITAL KEYPAD 46
5.1.2 Keypad function 46
5.2 PARAMETERS INSTRUCTIONS 47
5.2.1 Parameters setting display and representation method 47

5.2.2 Parameters display and quote type 47
5.2.3 Explanation Method for Parameter Setting Type 48
5.3 KEYPAD OPERATING PROCEDURE 49
5.3.1 Switchover between parameter section 49
5.3.2 EXAMPLE OF MONITOR FUNCTION PARAMETER 50
5.3.3 Example of auxiliary parameters usage 51
5.3.4 Parameter setting 52

VI. Operation 53

6.1 TRIAL OPERATION 53
6.1.1 Jog operation procedure 54
6.1.2 Run procedure of analog speed mode 55
6.1.3 Run procedure of position pulse mode 56
6.1.4 Trial Operation with the Servo motor Connected to the Machine 57
6.2 SELECTION OF CONTROL MODE 57
6.3 SETTING GENERAL FUNCTION 58
6.3.1 Setting password 58
6.3.2 Servo drive status display 58
6.3.3 Reverting to mfr‘s value 58
6.3.4 Setting the servo ON signal 59
6.3.5 Switching the Servo motor Rotation Direction 59
6.3.6 Setting the Overtravel Limit Function 59
6.3.7 Setting the braking 61
6.3.8 Encoder disconnect protection 64
6.3.9 Analog monitor output 64
6.4 ANALOG SPEED MODE 65
6.4.1 Setting parameters 65
6.4.2 Input signal 66
6.4.3 Soft start 66
6.4.4 S curve smoothness function 67
6.4.5 Speed arrival signal output 68
6.4.6 Zero clamp function 69
6.4.7 Encoder pulse frequency-division output 69
6.5 OPERATING USING POSITION CONTROL 71
6.5.1 SETTING PARAMETERS 71

6.5.2 Position pulse command 72
6.5.3 Internal register position mode 72
6.5.4 Setting electronic gear 75
6.5.5 Home Search Mode 77
6.5.6 Command pulse inhibit function 84
6.5.7 Command pulse clear function 84
6.5.8 Position arrival signal output function 84
6.5.9 Position loop trace error pre-alarm output 85
6.5.10 Position loop trace error alarm output 85
6.5.11 Pulse input filter frequency 85
6.5.12 Position loop filter time constant 86
6.6 ANALOG TORQUE MODE 87
6.6.1 Setting parameters 87
6.6.2 Torque command input 88
6.6.3 Limiting Servo motor Speed during Torque Control 88
6.7 INTERNAL REGISTER SPEED MODE OPERATION 89
6.7.1 Setting parameters 89
6.7.2 Setting input signal 90
6.7.3 Operating Using an Internally Set Speed 90
6.8 OPERATION OF INTERNAL REGISTER TORQUE MODE 90
6.9 LIMITING TORQUE 91
6.9.1 Internal max torque limit 91
6.9.2 Torque limiting controlled by terminals 91
6.9.3 Torque limiting by analog 92
6.10 OTHER OUTPUT SIGNALS 93
6.10.1 SERVO ALARM OUTPUT AND ALARM CODE OUTPUT 93
6.10.2 Servo ready output 93
6.10.3 Overload pre-alarm signal output 94
6.10.4 Rotation detection 94
6.11 SEQUENCE CONTROL 95

VII. List of parameters 98

7.1 MONITOR FUNCTION GROUP(LO-□□) 99
7.2 Utility function group (SO-□□) 100
7.3 MAIN FUNCTION GROUP(PO□□□) 103

VIII. Inspection, Maintenance, and Troubleshooting 111

8.1 TROUBLESHOOTING 111
8.1.1 Alarm Display Table 111
8.1.2 Alarm code output 111
8.1.3 TROUBLESHOOTING OF ALARM AND WARNING 112
8.1.4 Other malfunction 114
8.2 INSPECTION AND MAINTENANCE 115
8.2.1 Check and maintenance 115
8.2.2 Servo drive‘s parts replacement 115

IX. Appendix 117

9.1 SERVO GAIN ADJUSTMENT METHODS 117
9.1.1 Related parameters 117
9.1.2 Parameters meaning and instructions 117
9.1.3 Gain switchover setting 119
9.1.4 Rigid setting 120
9.2 COMMUNICATION 121
9.2.1 MODBUS GENERAL 121
9.2.2 MODBUS Protocol 121
9.2.3 Parameter related to communication 125
9.2.4 PHYSICAL INTERFACE 126

I. Summary

1.1 Product Check

1.1.1 Unpacking check

After receiving the AC servo drive, please check for the following:

Item	Content
Check for damage	Inspect the unit to insure it was not damaged during shipment.
Ensure that the product is what you have ordered.	Verify the part number indicated on the nameplate corresponds with the part number of your order
Accessories completeness	Ensure that the model and quantity of accessories are enough.
Ensure that the servo motor shaft rotates freely.	Rotate the motor shaft by hand; a smooth rotation will indicate a good motor. (However, a servo motor with an electromagnetic brake can not be rotated manually.)

! Caution

★ The damaged servo motor and drive are forbidden to be used.

★ Please ensure that both the servo drive and motor are correctly matched for size (power rating).

★ If any items are damaged or incorrect, please inform the distributor whom you purchased the product from or manufacturer.

1.1.2 Servo Drive Nameplate

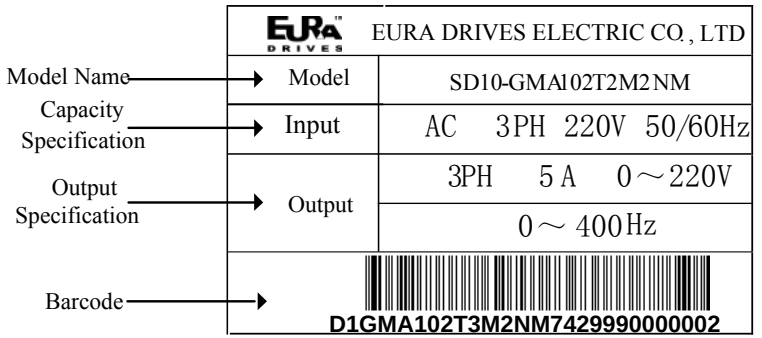

Fig 1-1-1 Servo Drive Nameplate

1.1.3 Servo Motor Nameplate

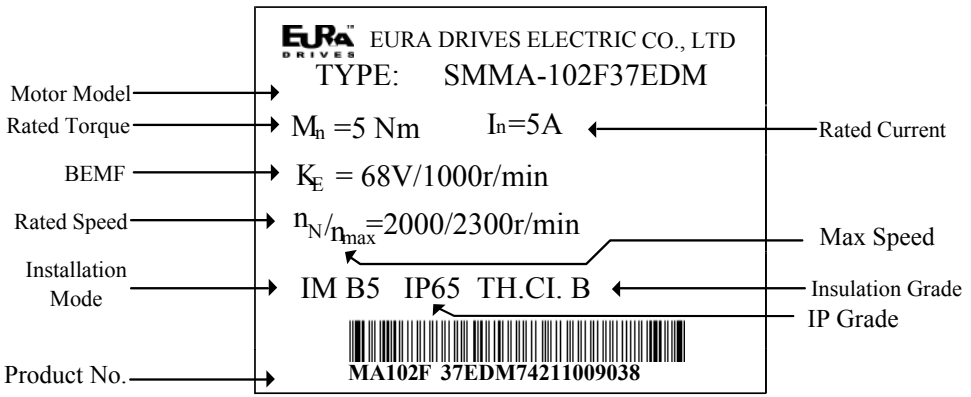

Fig 1-1-2 Servo Motor Nameplate

1.2 Servo Drive Features

1.2.1 Servo Drive Features

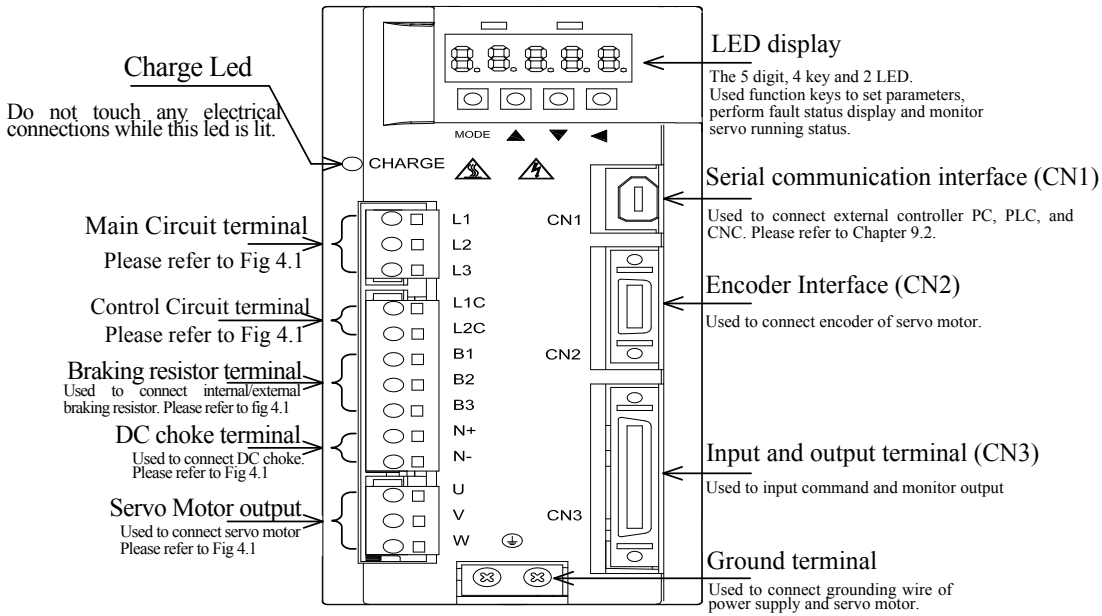

Fig 1-2-1 Servo Drive Features

1.2.2 Servo Motor Features

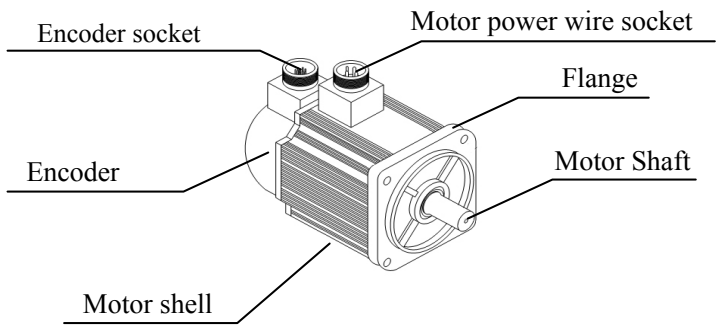

Fig 1-2-2 Servo Motor Features

1.3 Connection to Peripheral Devices

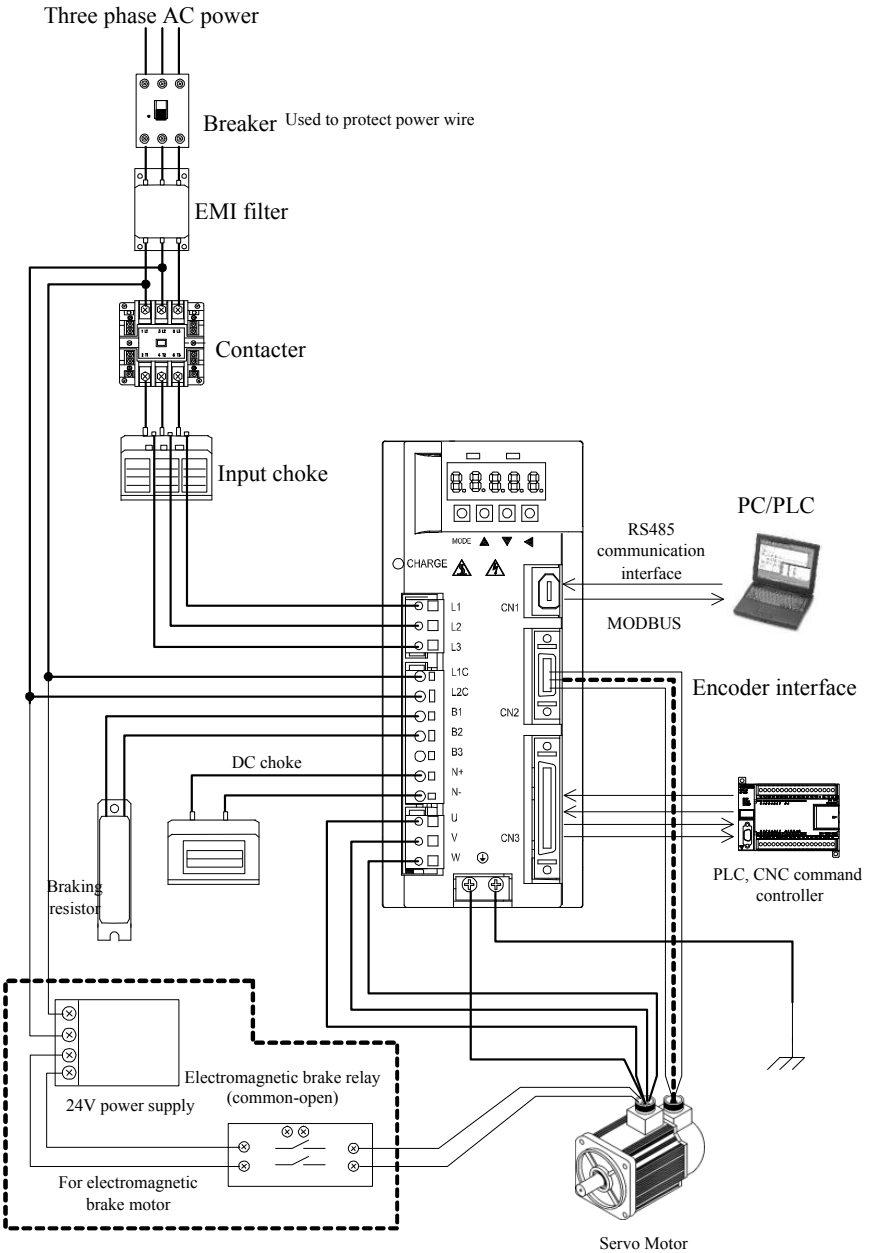

Fig 1-3-1 Connection to Peripheral Devices

II. Model Selection

2.1 Model selection for Servo Drives

2.1.1 Servo Drive naming rule

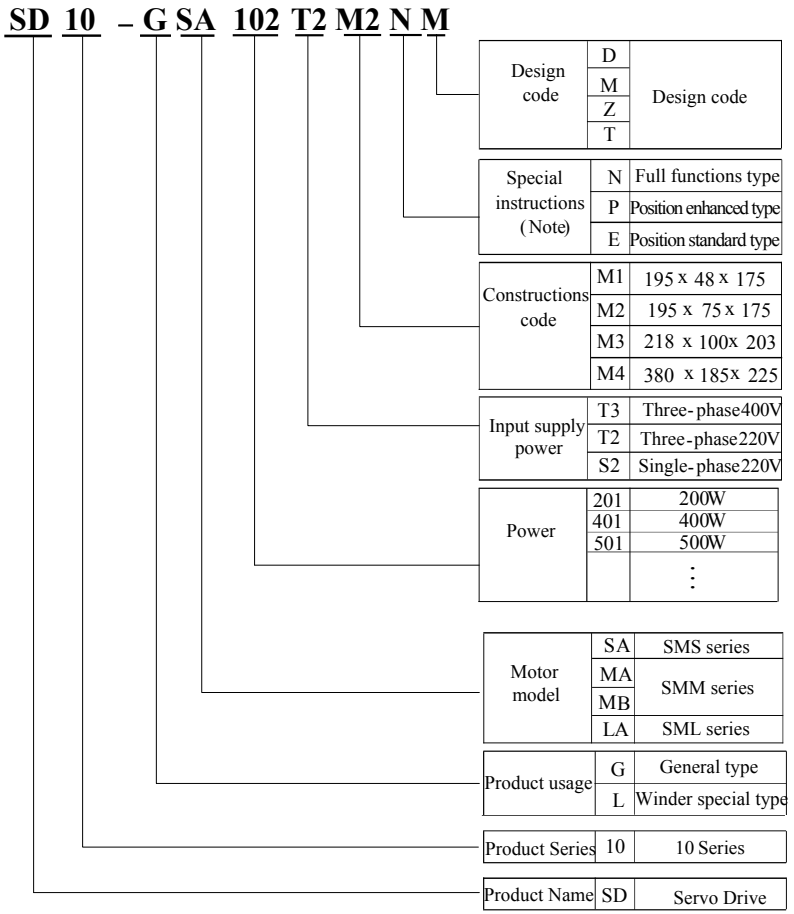

Fig 2-1-1 Servo Drive naming rule

Note: N represents full-function type

E represents position standard type (It includes position mode, internal register speed mode, internal register torque mode and internal register position mode)

P represents position enhanced type (It includes functions of dynamic braking, analog output, pulse frequency-division output and fault code output besides the function of position standard type.)

2.1.2 Servo Drive Specifications

Items		Contents
Power supply		Single phase/ three phase 220VAC -15~+10% 50/60Hz
Control mode		Pt Position pulse mode Pr Internal register position mode Sz Analog speed mode Sr Internal register speed mode Tz Analog torque mode Tr Internal register torque mode
Regenerative braking		Built-in or External (External braking should be selected and purchased)
Control characteristic	Frequency response	400Hz
	Speed Accuracy	0.01% or less at load fluctuation 0 to 100%,
	Speed fluctuation	0.2%（rated speed）
	Speed control range	1：10000
	Input pulse frequency	500KHz (line drive); 200KHz (Open collector)
Input signal	Control input	Servo on, Alarm reset, Pulse clear, Pulse prohibited, Forward run prohibited, Reverse run prohibited, Forward torque limit, Reverse torque limit, Internal speed selection, Internal position triggered, ―Home" searching triggered, Zero speed CLAMP
	Encoder	Incremental encoder and pulse numbers are selectable.
Output signal	Control output	Servo ready, Servo alarm activated, At positioning completed, At speed reached, Electromagnetic brake control, Rotation Detection, At speed limit, Homing completed, At torque limit
	Encoder signal frequency-division output	Encoder signal output (A, B Z Line Driver) 1～256 frequency-division output
Position control	Input mode	1. A phase+B phase 2. Forward pulse+Reverse pulse 3. Pulse+Direction 4. Internal register
	Electronic gear	0.01≤ B / A ≤100
Analog speed control		-10V～+10V analog speed signal input
Analog torque control		-10V～+10V analog torque signal input
Acceleration/Deceleration		Accele/decele time is set to 1～30000ms(related to 0←→rated speed)
Communication		RS485 communication port is connected with PC, to set control parameters and to monitor servo.
Parameters setting	Keypad	The parameters are set by keypad, which is displayed by 5LEDs.
	PC/PLC	RS485 communication can set parameters by some PC/PLC software.
Monitor function		Output current, PN voltage, motor speed, motor feedback pulse, motor feedback rotation, given pulse, given pulse error, given speed, given torque, analog speed given and analog torque given.
Protection function		Overvoltage, Undervoltage, Overload, Overcurrent, Encoder error, Overspeed, Abnormal pulse control command, Emergency stop, Servo overheat, Input power phase loss, Regeneration error, Overposition.
Applicable load inertia		Lower than 5 times of servo motor inertia.

2.1.3 Servo drives installation dimensions

M1 structure

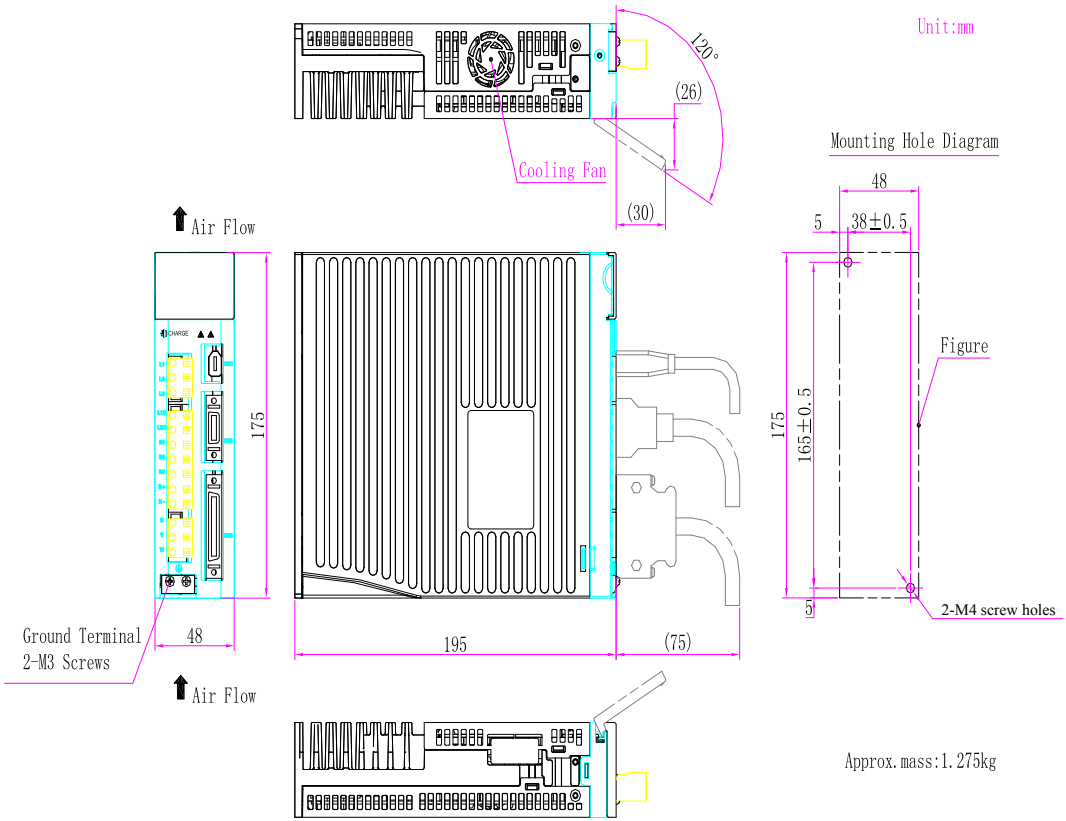

Fig 2-1-2 servo drive structure 1

M2 structure

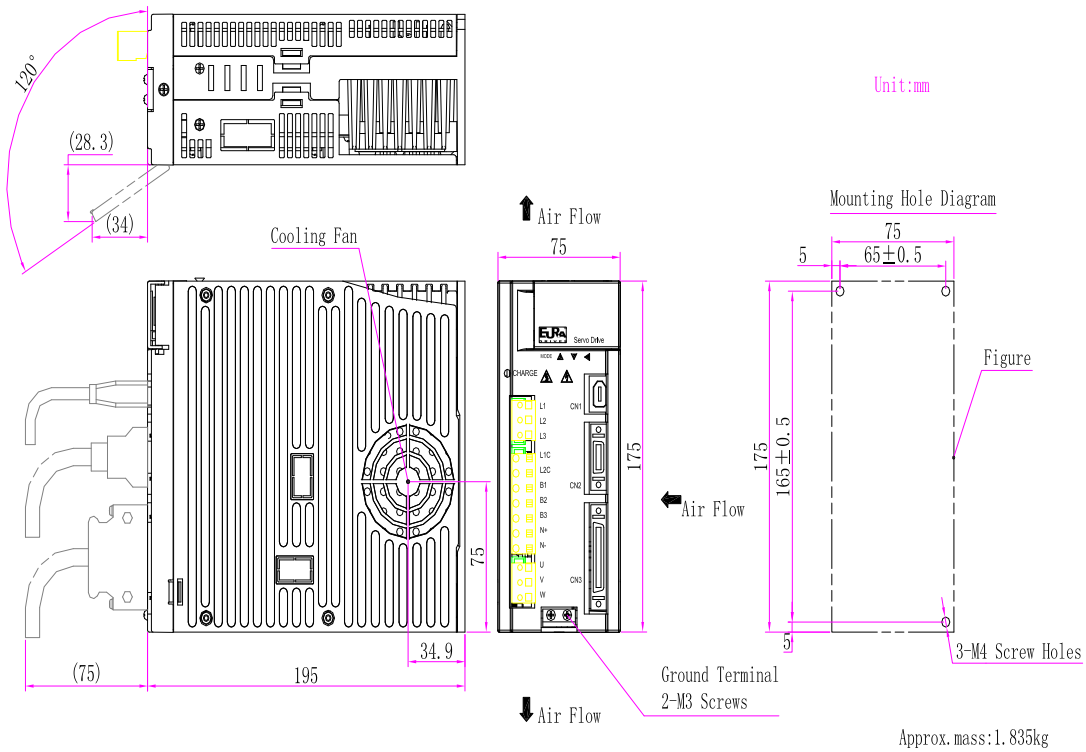

Fig 2-1-3 servo drive structure 2

M3 structure

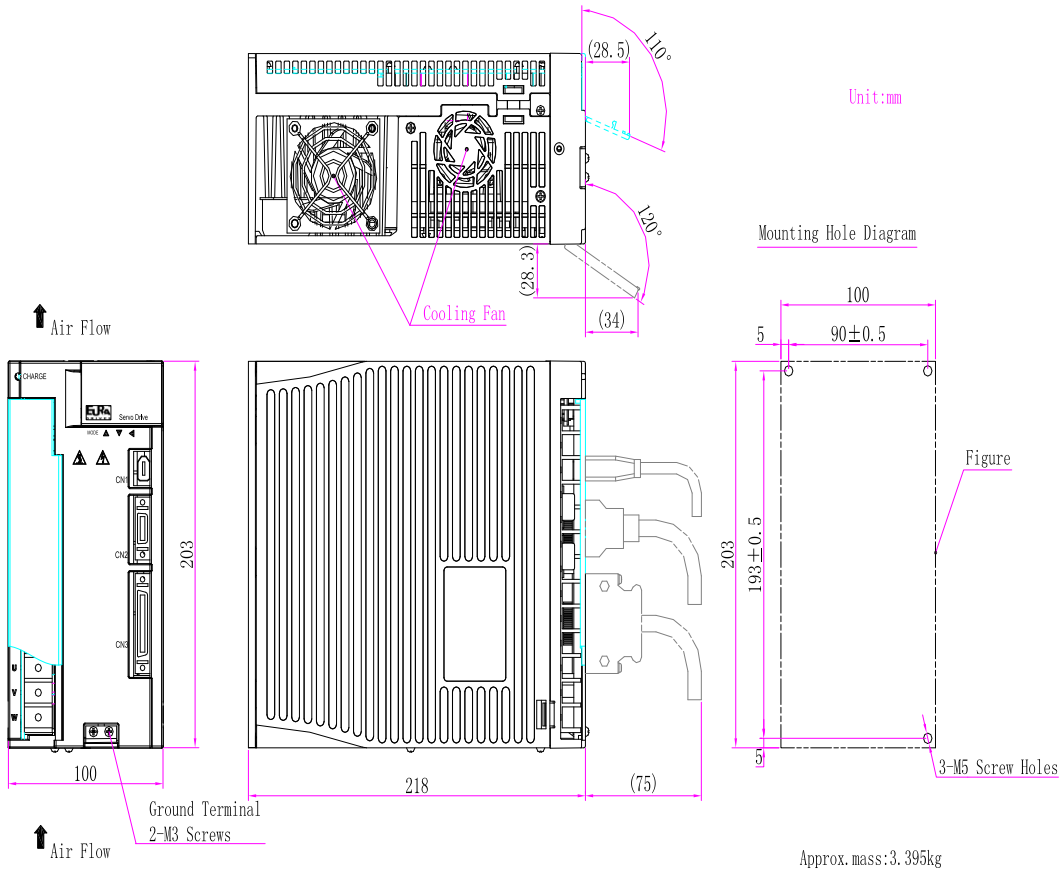

Fig 2-1-4 servo drive structure 3

M4 structure

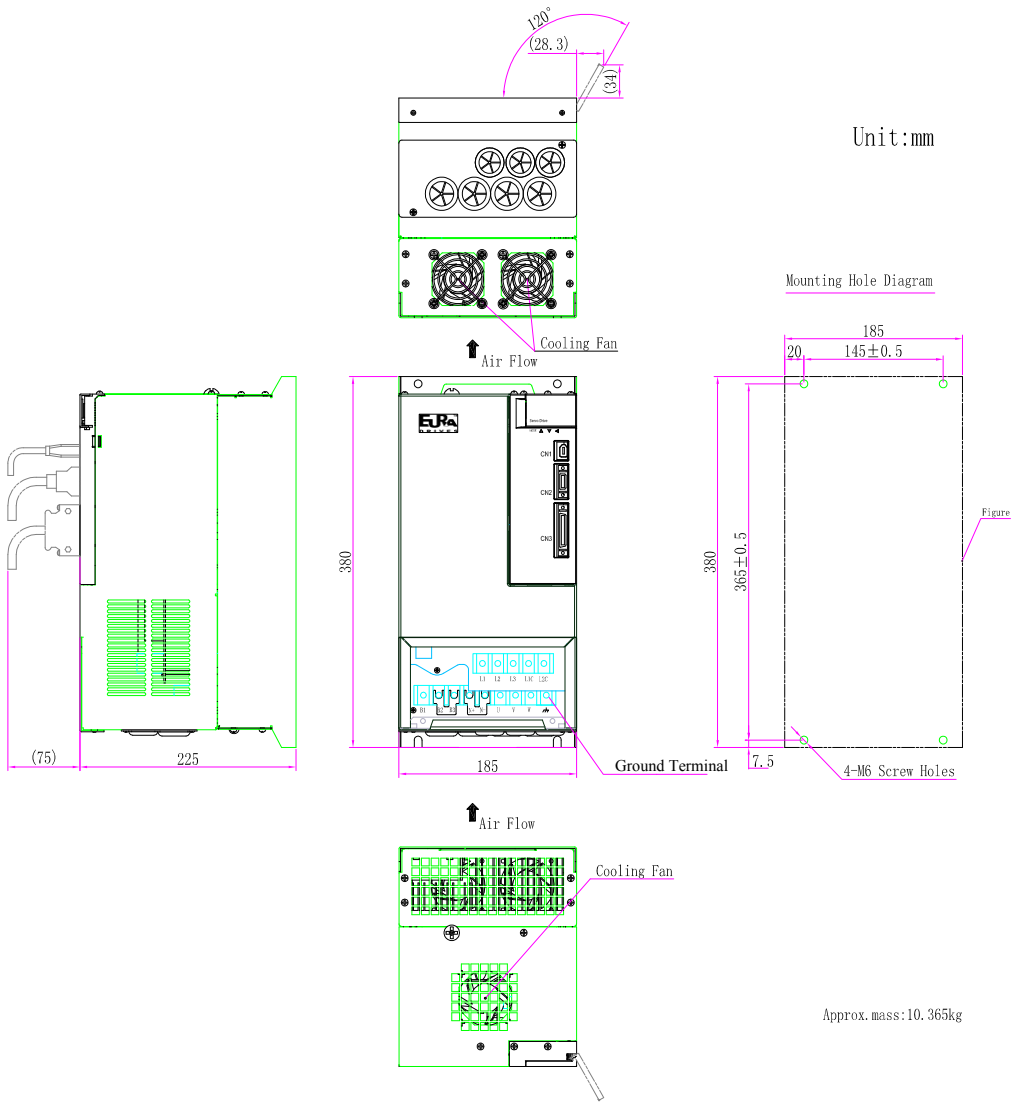

Fig 2-1-5 servo drive structure 4

a Front view b Lateral view

Fig 2-1-5 servo drive structure

2.2 Model selection for Servo Motor

2.2.1 Servo motor naming rule

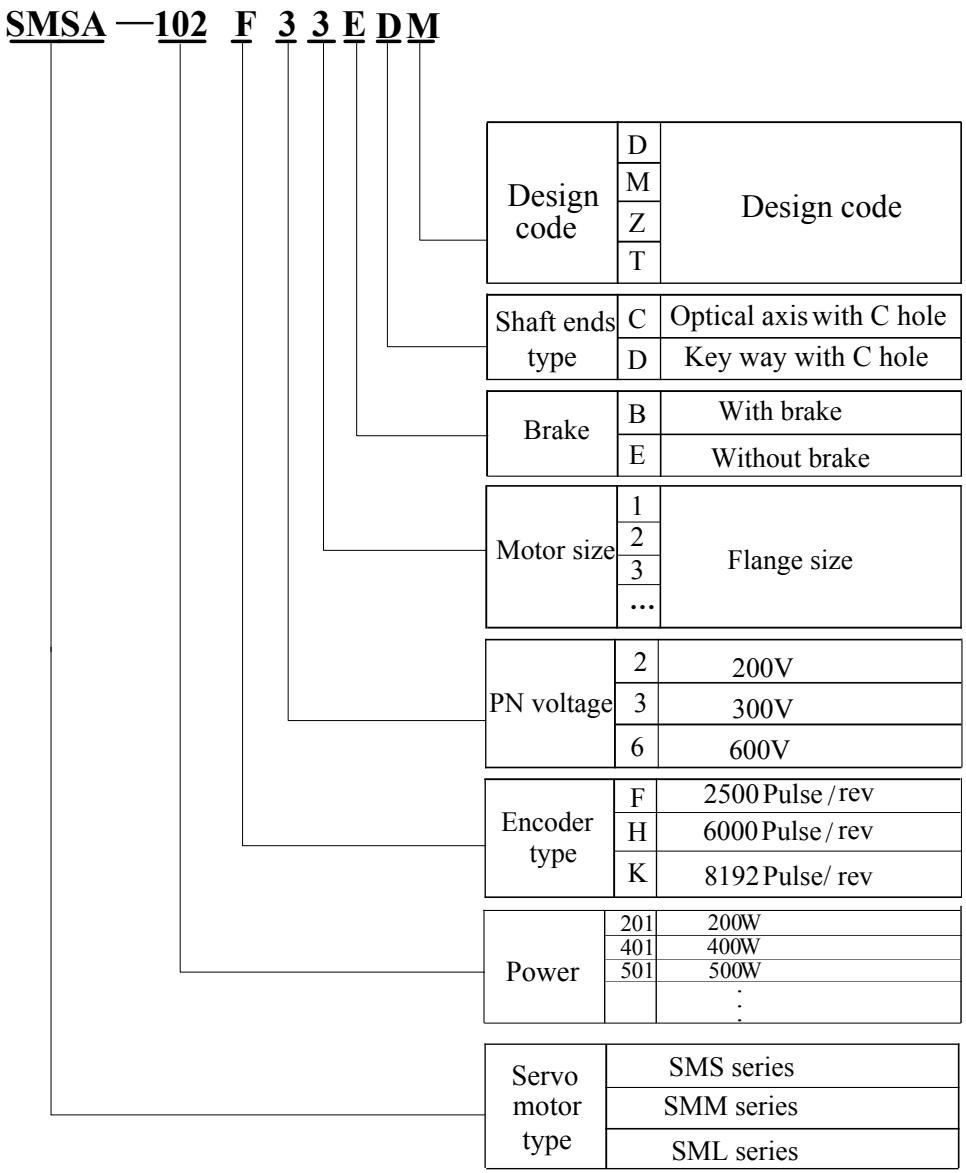

Fig 2-2-1 Servo motor naming rule

III. Installation

3.1 servo drives installation

3.1.1 Installation conditions

Environment conditions	Equipment location	In an indoor location, Prevent exposure from direct sunlight, Free from dust, tangy caustic gases, flammable gases, steam or the salt-contented, etc.
	Altitude	1000m or below
	Atmospheric pressure	86kPa~106kPa
	Operating temperature	-10℃~40℃
	Storage temperature	-20℃~60℃
	Humidity	Below 90% (no water-bead coagulation)
	Vibration Strength	Below 0.5G（4.9m/s^2）,10~60Hz (Discontinuous)
	IP rating	IP20
	Power system	TN system (Note)

Note: TN system: A power distribution system having one point directly earthed, the exposed conductive parts of the installation being connected to that points by protective earth conductor.

3.1.2 Servo drives installation method

Servo drives adopt vertical structure. Please install servo vertically.

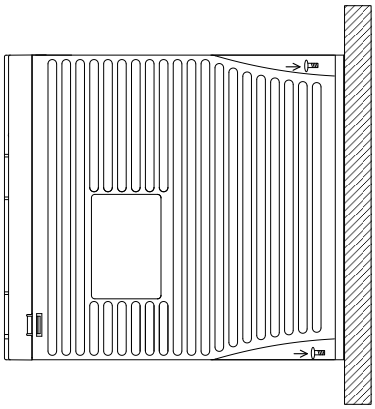

Fig 3-1-1 standard installation

If the other installation method is adopted, please purchase the installation bracket from manufacturers or distributors at first.

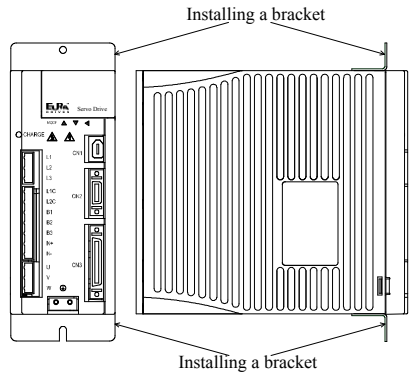

Fig 3-1-2 Special installation

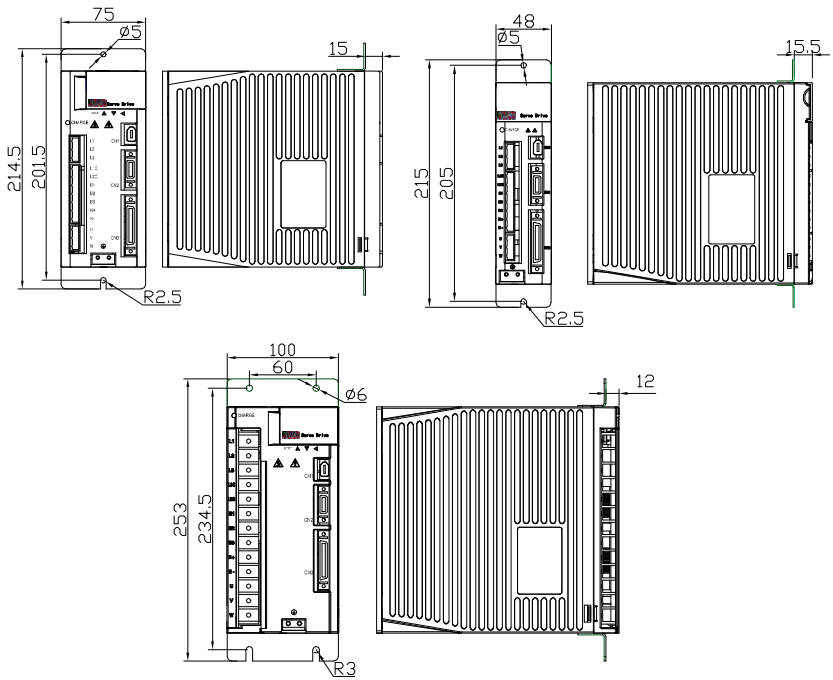

Fig 3-1-3 Special installation dimension

3.1.3 Installation procedure and minimum clearances

In order to ensure the drive is well ventilated, ensure that the all ventilation holes are not obstructed and sufficient free space is given to the servo drive.

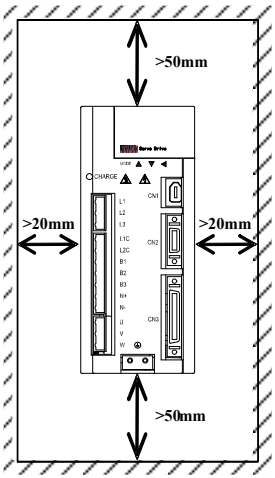

Fig 3-1-3 Minimum clearances for single drive

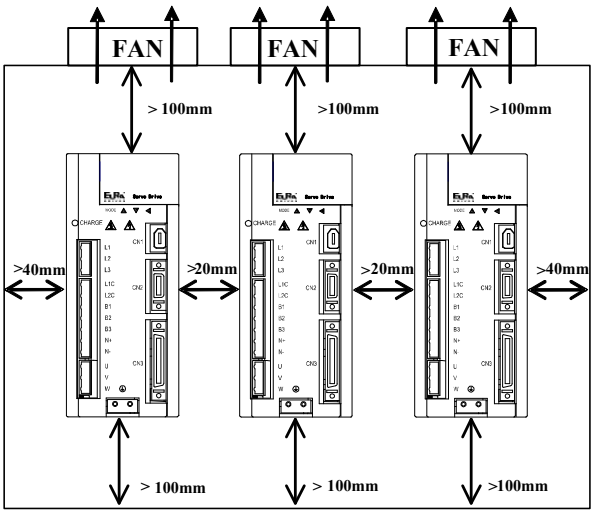

Fig 3-1-4 Minimum clearances for more drives

3.2 Servo motor installation

! Caution
★ Please check motor structure and IP rating. ★ Please do not drug motor axis and lead-out wire. ★ Please fasten motor with spring washer to avoid motor being loose. ★ Please do not strike motor or motor axis to avoid breaking encoder while installing motor. ★ The axial load and radial load of motor should not be heavy. ★ Motor axis should be coaxial with equipment axis.

3.2.1 Servo motor installation conditions

Environment conditions	Equipment location	Prevent tangy caustic gases and flammable gases
	Altitude	1000m or below
	Atmospheric pressure	86kPa~106kPa
	Operating temperature	-15℃~40℃
	Storage temperature	-20℃~80℃
	Humidity	Below 90% (no water-bead coagulation)
	Vibration Strength	Below 0.5G（4.9m/s^2）,10~60Hz (Discontinuous)
	IP rating	IP64 （IP65 and IP67 are optional）

3.2.2 Servo motor installation method

The service life of the servo motor will be shortened or unexpected problems will occur if the servo motor is installed incorrectly or in an inappropriate location. Always observe the installation instructions.

IV. Wiring

This chapter provides servo system block diagram.

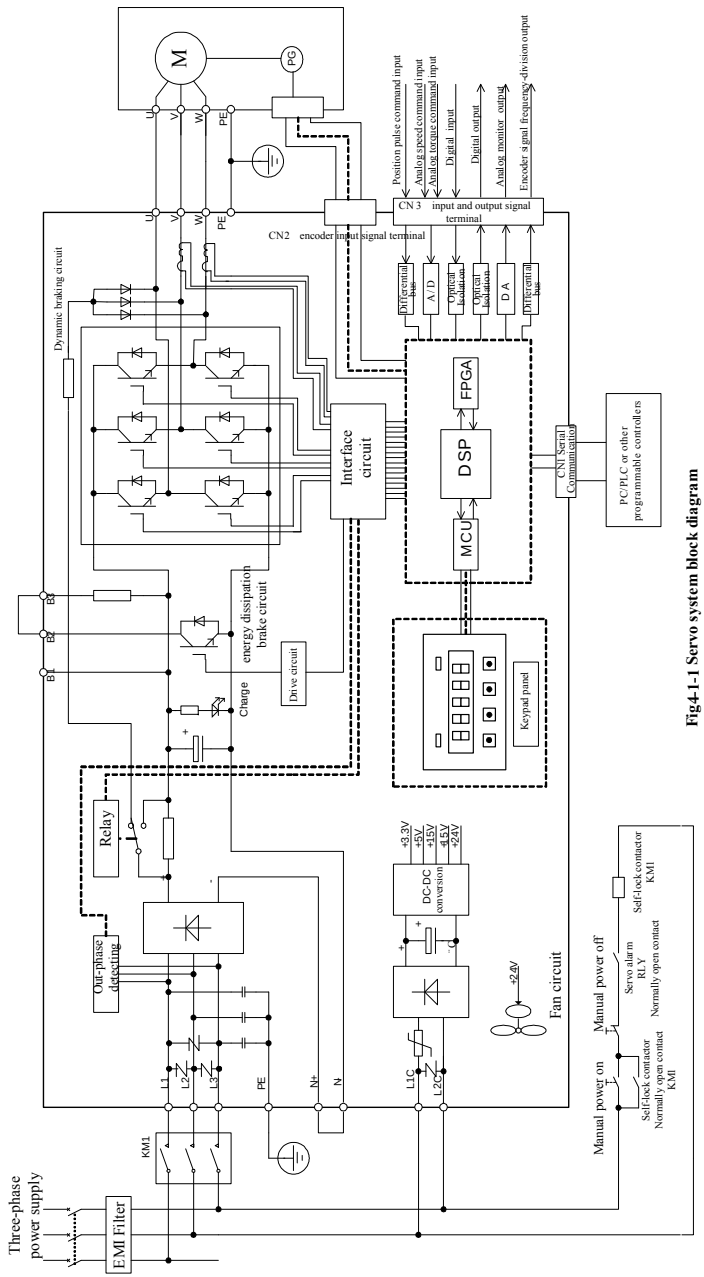

Fig4-1-1 Servo system block diagram

4.1 Main circuit wiring

DANGER

★ Connect the ground terminals to the earth. Improper grounding may result in electric shock or fire.
★ Connect the main circuit terminals correctly. Failure to observe this caution may result in damage to the drive or fire.
★ Do not connect servo motor to three-phase AC power supply. Failure to observe this precaution may result in serious injury or fire.

WARNING

★ Install the encoder cables in a separate from the motor power cables to avoid signal noise. Separate the conduits by 30cm above.
★ Use multi-strand twisted-pair wires or multi-core shielded wires for signal and encoder (PG) feedback cables. The max length of command input cable is 3m and the max length of encoder (PG) feedback cables is 15m.
★ Do not make the wiring between the drives and motor tight.
★ As a charge may still remain in the drive with hazardous voltages even after power has been removed. Please make sure the power light is off before performing any wiring or inspection.

4.1.1 Main circuit terminals

Terminal identification	Terminal description	Functions
L1，L2，L3	Main circuit terminal	Used to connect three-phase AC 220V power. L1 and L3 are used to connect to single-phase 220V power. (The drives 3KW and above 3kw can only be connected to three-phase power.)
L1C，L2C	Control circuit terminal	Used to connect to two phases of three-phase power or single-phase power.
B1，B2，B3	B2，B3：internal braking resistor terminal	Normally short B2 and B3. Internal braking resistor is used. (M2 shell and higher power drives have internal braking resistor.)
	B1，B2：external braking resistor terminal	Normally not connected. Remove the wire between B2 and B3 and connect an external braking resistor between B1 and B2 if the internal resistor is insufficient.
N+ ， N-	DC choke terminal	Normally short N+ and N-. If a countermeasure against power supply harmonic waves is needed connect a DC choke between N+ and N- terminals.
U， V，W	Servo motor output	Used to connect to servo motor.
⏚	Ground terminal	Used to connect to the grounding.

4.1.2 Main circuit terminal wiring

(1) Wiring size

The following are applicable wire sizes:

Single wire: Ø 0.5~ Ø 1.6mm；Braided wire: 0.8 mm^2~3.5mm^2 (American standard AWG28~AWG12)

(2) Connection procedure

1 Strip the end of the wire about 5~6mm.

2 Use a supplied lever or a standard flat-blade screwdriver (blade width of 3.0 to 3.5 mm). Put them into the slot, and press down firmly to open the wire terminal.

3 Insert the wire core into the opening and then close the opening by releasing the lever or removing the screwdriver.

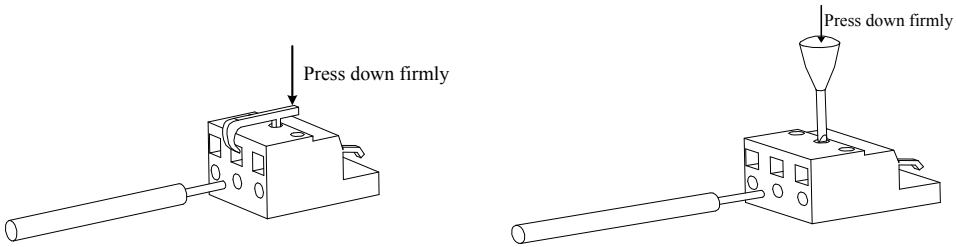

Fig 4-1-2 Connection procedure

4.1.3 Typical main circuit wiring examples

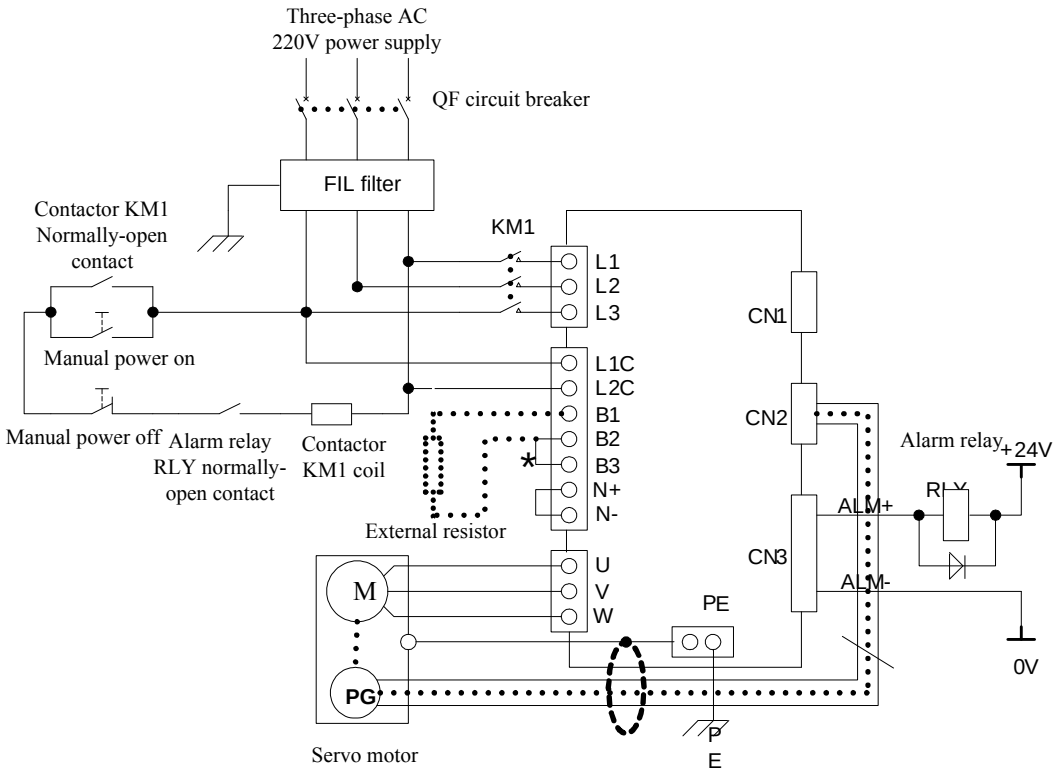

Fig 4-1-3 Typical main circuit wiring

Note:

1 Default internal braking resistor is used, and B2 and B3 are short connected. If external resistor is used, please remove the wire between B2 and B3 and connect external resistor between B1 and B2. The default setting for M1 shell has not internal braking resistor. If users need add it, please refer to 6.3.7 to install it.

2 RLY：external alarm-signal output relay.

3 KM1：contactor which is connected or disconnected to main circuit power supply by manual switch.

⚠ **Note: an emergency stop circuit should be added in main circuit, which can make the servodrive stop immediately if a fault occurs.**

4.1.4 Choke wiring

Choke can improve power factor, which can filter the harmonic and restrain voltage sudden changing.

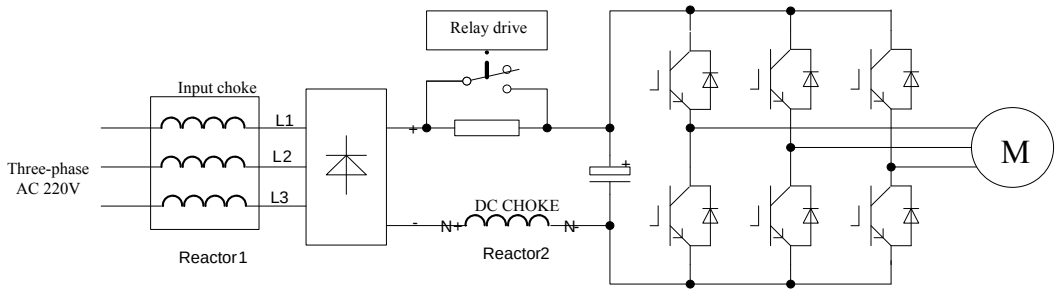

Fig 4-1-4 Choke wiring

4.2 Encoder wiring

4.2.1 Encoder Connector Terminal Layout

CN2 Encoder Connector Terminal Layout is as shown in figure 4-2-1.

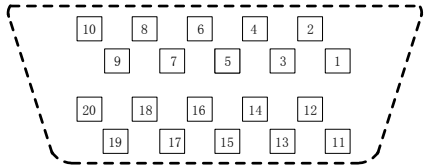

Fig 4-2-1

4.2.2 Encoder connector terminal

Terminal code	Terminal abbreviation	Signal name	**Function**
CN2- 1	/A	Encoder /A phase input	Connect to motor encoder /A phase
CN2- 2	A	Encoder A phase input	Connect to motor encoder A phase
CN2- 3	B	Encoder B phase input	Connect to motor encoder B phase
CN2- 4	/B	Encoder /B phase input	Connect to motor encoder /B phase
CN2- 5	/W	Encoder /W phase input	Connect to motor encoder /W phase
CN2- 6	W	Encoder W phase input	Connect to motor encoder W phase
CN2- 7	/U	Encoder /U phase input	Connect to motor encoder /U phase
CN2- 8	U	Encoder U phase input	Connect to motor encoder U phase
CN2- 9	GND	Grounding	Grounding
CN2-10	GND	Grounding	Grounding
CN2-11	Z	Encoder Z phase input	Connect to motor encoder Z phase
CN2-12	/Z	Encoder /Z phase input	Connect to motor encoder /Z phase
CN2-13	NC	NO CONNECTION	NO CONNECTION
CN2-14	NC	NO CONNECTION	NO CONNECTION
CN2-15	VCC	+5V power	+5V power
CN2-16	VCC	+5V power	+5V power
CN2-17	GND	Grounding	Grounding
CN2-18	GND	Grounding	Grounding
CN2-19	V	Encoder V phase input	Connect to motor encoder V phase
CN2-20	/V	Encoder /V phase input	Connect to motor encoder /V phase

Note: Always use twisted-pair wire to control noise.

4.3 I/O signal wiring

4.3.1 I/O Signal Connector Terminal Layout

CN3 I/O signal connector terminal layout is as following fig 4-3-1:

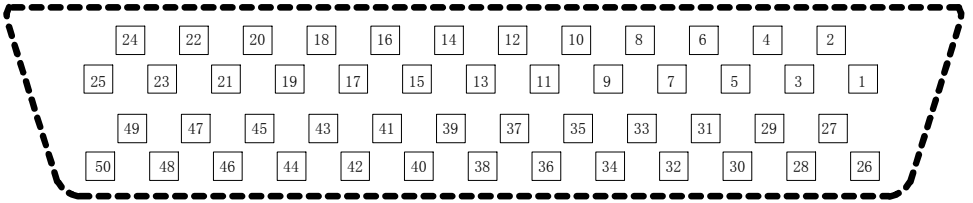

1	DO4+
3	+24V
5	DI1
7	DI3
9	DI5
11	DI7
13	ALO2
15	PBO-
17	PAO-
19	ALM-
21	DO1-
23	DO2-
25	DO3-

2	DO4-
4	GP
6	DI2
8	DI4
10	DI6
12	ALO3
14	ALO1
16	PBO+
18	PAO+
20	ALM+
22	DO1+
24	DO2+

27	AGND
29	NC
31	PZO-
33	NC
35	AS2-
37	DI8
39	/SIGN
41	NC
43	/PULS
45	AGND
47	AS1-
49	CM

26	DO3+
28	AO
30	NC
32	PZO+
34	AS2+
36	AGND
38	PL2
40	SIGN
42	NC
44	PULS
46	AS1+
48	PL1
50	CM

Fig 4-3-1 CN3 I/O signal connector terminal layout

⚠ **Note：The terminal marked "NC" must be left unconnected (No Connection). The NC terminal is used within the servo drive. Any outside connection to the NC terminal will result in damage to the drive and void the warranty!**

4.3.2 I/O Signal Names and Functions

(1) Input signals

Signal name	Pin No.	Abbreviation	Name	Input mode	Remarks
Programmable input terminal	CN3-5	DI1	Digital input 1	On/Off signal	Please refer to 4.5 programmable I/O signal terminal functions setting
	CN3-6	DI2	Digital input 2	On/Off signal	
	CN3-7	DI3	Digital input 3	On/Off signal	
	CN3-8	DI4	Digital input 4	On/Off signal	
	CN3-9	DI5	Digital input 5	On/Off signal	
	CN3-10	DI6	Digital input 6	On/Off signal	
	CN3-11	DI7	Digital input 7	On/Off signal	
	CN3-37	DI8	Digital input 8	On/Off signal	
Speed	CN3-46 CN3-47	AS1+ AS1–	Analog speed command input	Differential analog	Analog speed command input. AGND is grounding terminal for power supply
Torque	CN3-34 CN3-35	AS2+ AS2–	Analog torque command input	Differential analog	Analog torque command input. AGND is grounding terminal for power supply.
Position	CN3-44 CN3-43	PULS /PULS	Pulse command input (5V)	Differential signal or Open collector	The input mode of position pulse is differential signal or open collector. Please refer to parameter Po300 about 3 kinds of command modes.
	CN3-40 CN3-39	SIGN /SIGN	Pulse direction input(5V)	Differential signal or Open collector	
	CN3-48	PL1	Pulse direction input(24V)	Differential signal or Open collector	
	CN3-38	PL2	Pulse command input (24V)	Differential signal or Open collector	

(2) Output signal

Signal name	Pin No.	Abbreviation	Name	Input mode	Remarks
Programmable output terminal	CN3-21 CN3-22	DO1- DO1+	Digital output 1	On/Off signal	Please refer to 4.5 programmable I/O signal terminal functions setting
	CN3-23 CN3-24	DO2– DO2+	Digital output 2	On/Off signal	
	CN3-25 CN3-26	DO3– DO3+	Digital output 3	On/Off signal	
	CN3-2 CN3-1	DO4– DO4+	Digital output 4	On/Off signal	
	CN3-19 CN3-20	ALM– ALM+	Servo alarm output	On/Off signal	
General output terminal	CN3-14	ALO1	Fault code output	Open collector	Three terminals are used to output fault codes. CM is grounding for power supply. Please refer to 8.1.2
	CN3-13	ALO2			
	CN3-12	ALO3			
	CN3-28	AO	Analog monitor output	Analog	To monitor speed, current, torque. AGND is grounding for power supply.
	CN3-15 CN3-16	PBO– PBO+	Encoder B phase pulse frequency-division output	Differential signal	Encoder B phase pulse frequency-division output
	CN3-17 CN3-18	PAO– PAO+	Encoder A phase pulse frequency-division output	Differential signal	Encoder A phase pulse frequency-division output
	CN3-31 CN3-32	PZO– PZO+	Encoder Z phase pulse frequency-division output	Differential signal	Encoder Z phase pulse frequency-division output

（3）Rest signal

Signal name	Pin No.	Abbreviation	Name	Input mode	Remarks
Power	CN3- 3	+24V	Internal 24V power supply	Power	Internal 24V power supply, 100mA
Ground for power supply	CN3-49 CN3-50	CM	Ground for internal 24V power supply	Ground for power supply	Ground for alarm code output terminal and internal 24V power.
Common terminal	CN3- 4	GP	Common terminal	Common terminal	Common terminal for programmable input terminals
Ground terminal	CN3-27 CN3-36 CN3-45	AGND	Ground terminal for analog	Ground terminal for analog	Ground for analog speed command, analog torque command and analog monitor.
No Connection	CN3-29 CN3-30 CN3-33 CN3-41 CN3-42	NC	No connection	None	Used within the servo drive. Any outside connection to the NC terminal will result in damage to the drive.

4.4 I/O signal interface circuit

4.4.1 On-off input interface

WARNING

Note:

★ Because internal current-limiting resistor is adopted in the circuit, in order to make photocoupler work better, please select suitable power supply which closed current is 5~10mA. 24V power supply is recommended.

★ Internal 24V power supply is supplied in the drives, the capacity is 100mA/24V. Advise users to use external power supply.

DI1~DI8 input terminals circuit is bidirectional photocoupler isolating circuit. The common terminal of photocoupler is GP terminal which is used to connect to power supply or grounding for power supply. Please refer to fig 4-4-1 and 4-4-2. Please select external DC power supply to supply the primary voltage of photocoupler in order to decrease the interference to internal circuit.

(1) Passive contactor

Passive contacts include relay contactor, limit switch, general key, button and so on. The common contact circuit is as following figure:

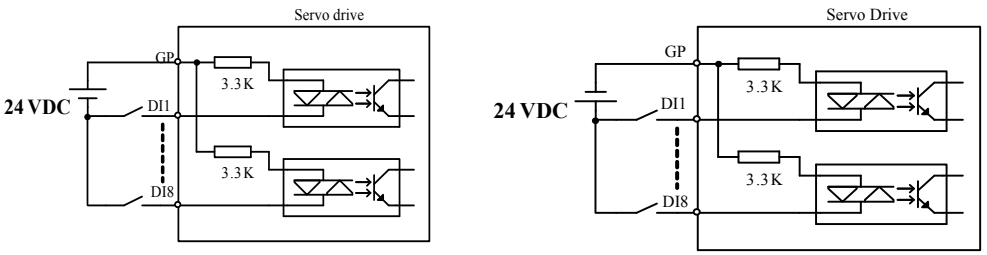

Fig 4-4-1 passive-contact interface circuit

(2) Active contactor

Active contactors include photoelectrical sensor, Hall sensor, transistor type PLC.

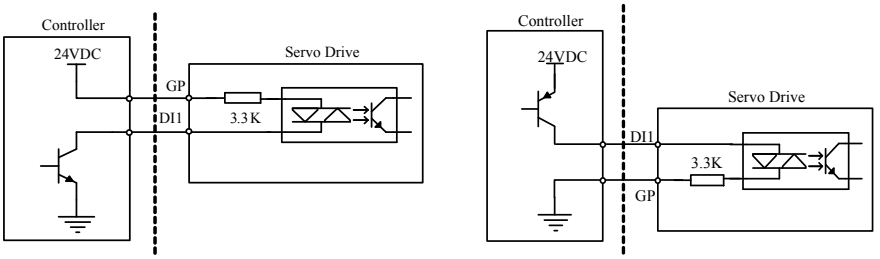

NPN type **PNP type**

Fig 4-4-2 active contactor interface circuit

4.4.2 On-off output interface

The output signal ALM and DO1~DO4 adopts photocoupler of Darlinton output which has strong ability for drive and can drive small relay directly. It can drive heavier load by driving photocoupler. The max current should not be higher than 50mA.

(1) Relay output

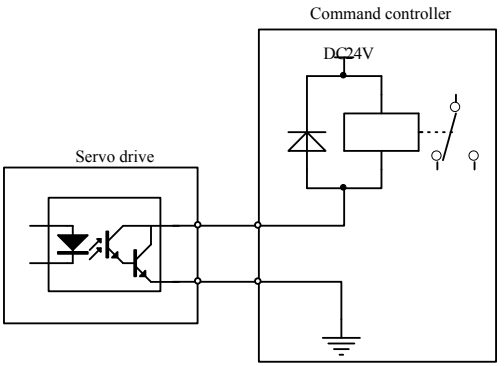

Fig 4-4-3 Relay output interface circuit

⚠ **note：Relay is inductance load, please connect a freewheel diode in antiparallel between the load. If the freewheel diode is connected inversely, servo drives will be damaged.**

(2) Photocoupler isolating output

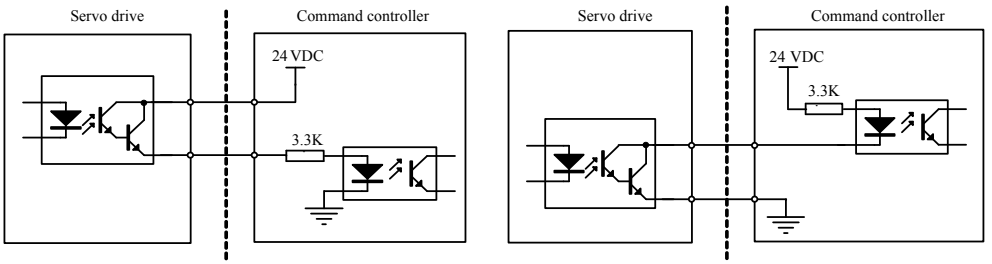

PNP type **NPN type**

Fig 4-4-4 Photocoupler output interface circuit

⚠ **Note: Match usage of power supply and current-limiting resistor make external photocoupler on state.**

4.4.3 Command pulse input interface

Servodrive has two groups of command input terminals PULS, /PULS and SIGN, /SIGN, which are used to receive high-speed pulse signal. The common interface types include differential input and single-end input. Command pulse input of differential type circuit can restrain differential-mode interference and transmit signal longer, which is the recommended circuit.

(1) Differential drive

5V differential drive signal can be inputted by pulse input terminals of PULS, /PULS and SIGN, /SIGN. Take the example of terminals PULS and /PULS:

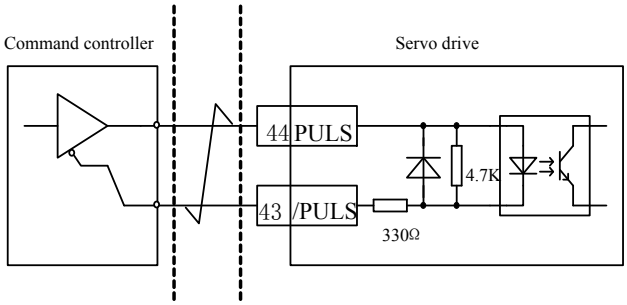

Fig 4-4-5 5V differential pulse input interface circuit

24V differential drive signal can be inputted by pulse input terminals of PL1, /SIGN and PL2, /PULS. Take the example of terminals PL2 and /PULS：

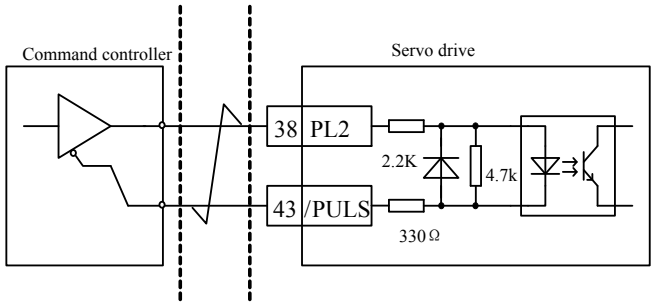

Fig 4-4-6 24V differential pulse input interface circuit

(2) Single-end drive

The types of single-end drive include collector (drain) input, emitter (source) input and push pull input, and so on. The input types of differential signal have a better anti-jamming than single-end drive, and the transmission distance of single-end drive is shorter.

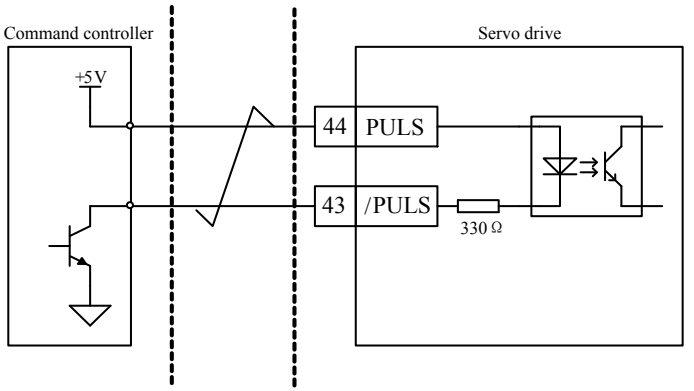

Fig 4-4-7 5V open-collector pulse input interface circuit

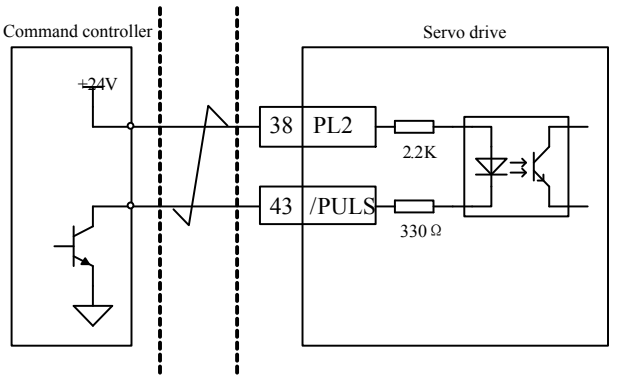

Fig 4-4-8 24V open-collector pulse input interface circuit

4.4.4 Encoder pulse frequency-division output interface

Frequency-division circuit in the servodrive processes encoder input signal by the mode of frequency-division, which is output by differential bus mode. Interface circuit includes high-speed photocoupler interface and differential chip interface. Take the example of encoder A phase pulse frequency-division output.

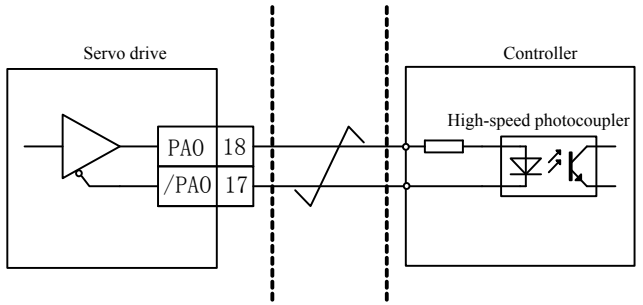

Fig 4-4-9 Photocoupler interface circuit

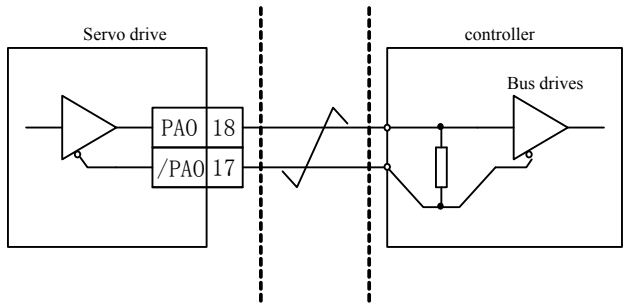

Fig 4-4-10 Differential chip interface circuit

Note: DS26LS31 is recommended as receiving chip, and 200Ω/1/4W match resistor is recommended.

4.4.5 Analog command input interface

Analog input circuit is classified into two types of differential signal input and single-end drive input, the input resistor is 10KΩ and the range of input voltage is -10V~+10V. Take the analog speed command input for example:

(1) Differential signal input

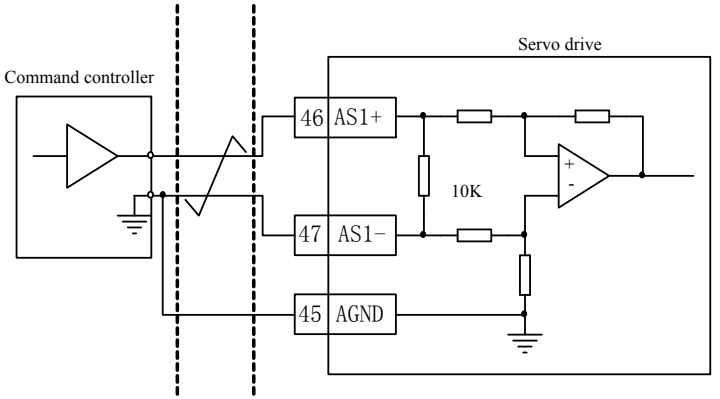

Fig 4-4-11 Analog differential signal input interface circuit

(2) single-end input

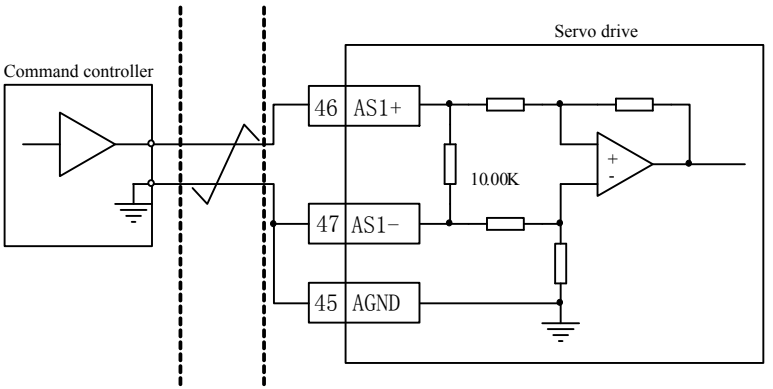

Fig 4-4-12 Analog single-end input interface circuit

Comparison of two connections:

(1) In line driver connection, AGND, AS1- and AS2- are connected in the side of command controller, three cables are needed; in single-end connection, AGND, AS1- and AS2- are connected in the side of servodrive, two cables are needed

(2) The advantage of line driver connection is to inhibit command interference better.

4.4.6 Analog monitor output interface

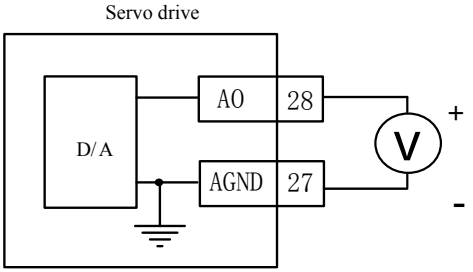

Fig 4-4-13 analog monitor output interface

The voltage range of analog monitor is 0~10V, the range of output current is 0~10mA.

4.4.7 Malfunction code output interface

Malfunction output circuit interface connects through open-collector transistor circuit, the emitters of three transistors are connected to CM, and user should supply power supply and pull-up resistor by himself.

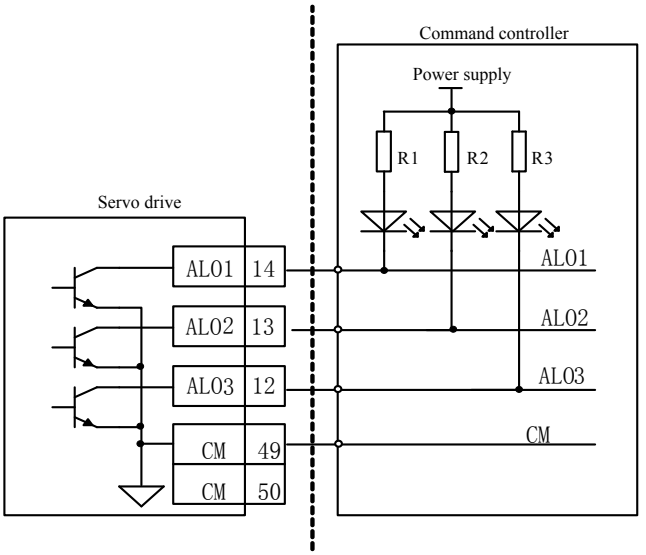

Fig 4-4-14 Malfunction code output interface

⚠ Note:

1 The voltage of power supply must be match with R1, R2 and R3.

2 The max current of transistor must be lower than 20mA.

4.5 Function setting and status monitor of programmable I/O signal

4.5.1 Function setting of programmable input signal terminal

Programmable terminals include DI1~DI8.

Input contactor type is used to select common-open or common-close interface type. For example, when some malfunction occurs, servo drive must stop safely, which needs the common-close switch.

⚠ After changing these parameters, turn OFF the main circuit and control power supplies and then turn them ON again to enable the new settings.

d □ □ □ □

Function of programmable input signal terminal

X	Function	Name
0	Servo on	SON-1
1	Alarm reset	AL-RST
2	Forward torque limit	F-CL
3	Reverse torque limit	R-CL
4	Internal speed selection1	SD-S1
5	Internal speed selection 2	SD-S2
6	Internal speed direction control	SD-DIR
7	Zero speed CLAMP	ZCLAMP
8	Gain switchover	GAINUP
9	Reserved	–
10	Pulse clear	CLR
11	Common pulse prohibited	INH-P
12	Emergency stop	ESP
13	Reverse running prohibited	R- INH
14	Forward running prohibited	F- INH
15	Reserved	–
16	Internal register position selection 1	SD0
17	Internal register position selection 2	SD1
18	Internal register position selection 3	SD2
19	Internal register position hold	HOLD
20	Internal register position triggered	CTRG
21	Home searching triggered	SHOM
22	External reference origin	ORGP

Y	Input contactor type selection
0	External switch opened valid (common-closed)
1	External switch closed valid (common-opened)

d	Two-parameter mode, refer to 5.2.2

Fig 4-5-1 Setting programmable input terminal function

Setting value	Function	Name	Instructions
0	Servo on	SON-I	Servo on. Switch servo to ~~"~~servo ready"
1	Alarm reset	AL-RST	A number of faults (Alarms) can be cleared by activating AL-RST.
2	Forward torque limit	F-CL	Servo drive output torque when motor is forbidden forward run.
3	Reverse torque limit	R-CL	Servo drive output torque when motor is forbidden reverse run.
4	Internal speed selection 1	SD-S1	The combination of internal speed selection 1 and internal speed selection 2 gets four kinds of internal speed.
5	Internal speed selection 2	SD-S2	
6	Internal speed direction control	SD-DIR	Motor run direction is controlled by SD-DIR in the mode of internal register speed.
7	Zero speed CLAMP	ZCLAMP	When the absolute value of speed is lower than the value of zero speed CLAMP, the motor speed is 0 and position is locked.
8	Gain switchover	GAINUP	Switchover between different gain.
9	–	–	Reserved
10	Pulse clear	CLR	Position deviation register returns to 0 in the position mode.
11	Command pulse prohibited	INH-P	External pulse command is invalid in the position mode.
12	Emergency stop	ESP	Motor stops urgently.
13	Reverse run prohibited	R-INH	Motor is forbidden reverse run.
14	Forward run prohibited	F-INH	Motor is forbidden forward run.
15	–	–	Reserved
16	Internal register position selection 1	SD0	Internal register position selection
17	Internal register position selection 2	SD1	Internal register position selection
18	Internal register position selection 3	SD2	Internal register position selection
19	Internal register position hold	HOLD	The present position command is hold when internal register position hold is valid. If this command is invalid, keep executing the present position command.
20	Internal register position triggered	CTRG	Internal register position triggered mode
21	Home searching triggered	SHOM	Home searching triggered mode
22	External reference origin	ORGP	ORGP is external reference origin.

4.5.2 Function setting of programmable output terminal

Programmable output terminals include terminals DO1+, DO1-, DO2+, DO2-, DO3+, DO3- , DO4+, DO4- and ALM+, ALM-.

⚠ After changing these parameters, turn OFF the main circuit and control power supplies and then turn them ON again to enable the new settings.

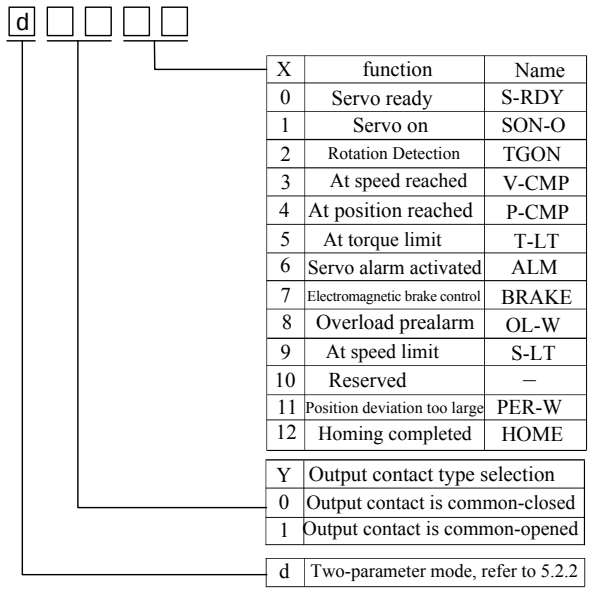

Fig 4-5-2 Setting programmable output terminal function

Setting value	Function	Name	instructions
0	Servo ready	S-RDY	S-RDY is activated when the servo drive is ready to run. All fault and alarm conditions, if present, have been cleared.
1	Servo on	SON-O	SON-O is activated when the servo motor is ON.
2	Rotation Detection	TGON	When the absolute value of speed is higher than the value of at rotation detection, TGON is activated.
3	At speed reached	V-CMP	V-CMP is activated when the servo motor has reached the target rotation speed.
4	At position reached	P-CMP	Position completed
5	At torque limit	T-LT	T-LT is activated when toque is limited.
6	Servo alarm activated	ALM	ALM is activated when the drive has detected a fault condition.
7	Electromagnetic brake control	BRAKE	BRAKE is activated actuation of motor brake.
8	Overload pre-alarm	OL-W	Overload pre-alarm signal
9	At speed limit	S-LT	S-LT is activated when speed is limited.
10	Reserved	–	Reserved
11	Position deviation too large	PER-W	PER-W is activated when position deviation is too large.
12	Homing completed	HOME	HOME is activated when the servo drive has detected that the HOME sensor has been detected.

4.5.3 Input terminal default function in all mode

Setting value	Function	Pt	Pr	Sz	Sr	Tz	Tr
0	Servo on	DI1	DI1	DI1	DI1	DI1	DI1
1	Reset	DI5	DI5	DI5	DI5	DI5	DI5
2	Forward torque limit	DI6		DI6		DI6	DI6
3	Reverse torque limit	DI7		DI7		DI7	DI7
4	Internal speed selection 1				DI7		
5	Internal speed selection 2				DI8		
6	Internal speed direction control				DI6		
7	Zero speed CLAMP			DI8			
8	Reserved						
9	Reserved						
10	Pulse clear	DI8					
11	Command pulse prohibited						
12	Emergency stop	DI2	DI2	DI2	DI2	DI2	DI2
13	Reverse run prohibited	DI4	DI4	DI4	DI4	DI4	DI4
14	Forward run prohibited	DI3	DI3	DI3	DI3	DI3	DI3
15	Reserved					DI8	DI8
16	Internal position register selection 1		DI6				
17	Internal position register selection 2		DI7				
18	Internal position register selection 3						
19	Internal position register hold						
20	Internal position register triggered		DI8				
21	Home searching triggered						
22	External reference origin						

4.5.4 Output terminal default function in all mode

Setting value	Function	Pt	Pr	Sz	Sr	Tz	Tr
0	Servo ready	DO1	DO1	DO1	DO1	DO1	DO1
1	Servo on						
2	Rotation Detection	DO2	DO2	DO2	DO2	DO2	DO2
3	At speed reached			DO3	DO3		
4	At position reached	DO3	DO3				
5	At torque limit	D04		DO4	DO4		
6	Servo alarm activated						
7	Electromagnetic brake control					DO3	DO3
8	Overload pre-alarm						
9	At speed limit					DO4	DO4
10	Reserved						
11	Position deviation too large						
12	Homing completed		DO4				

4.5.5 Status of monitor I/O terminal

Parameters in the function section of monitor can monitor I/O terminals status.

(1) Monitor parameters of input terminal：

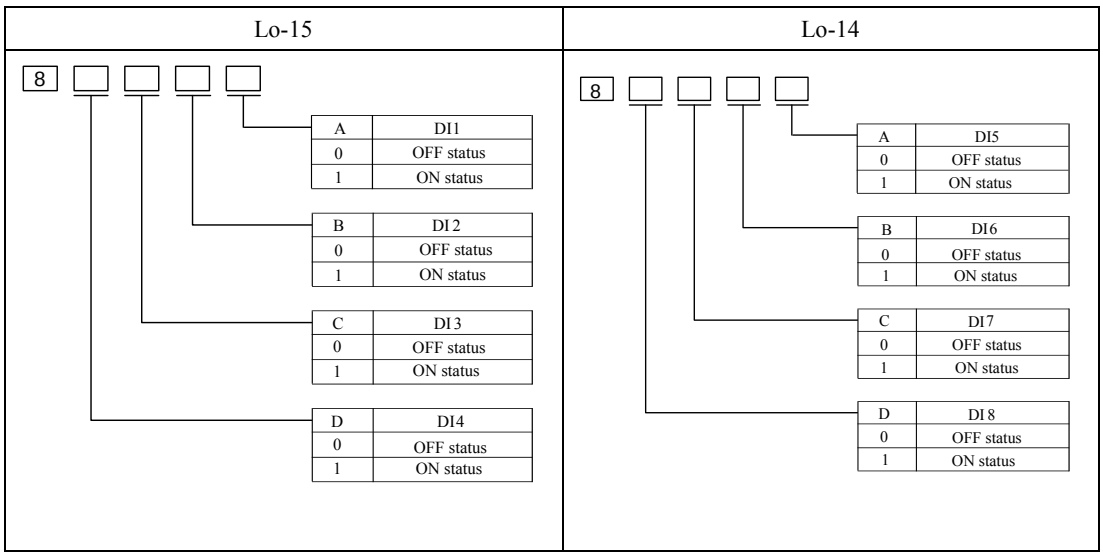

(2) Monitor parameters of output terminal

Lo-17	Lo-16
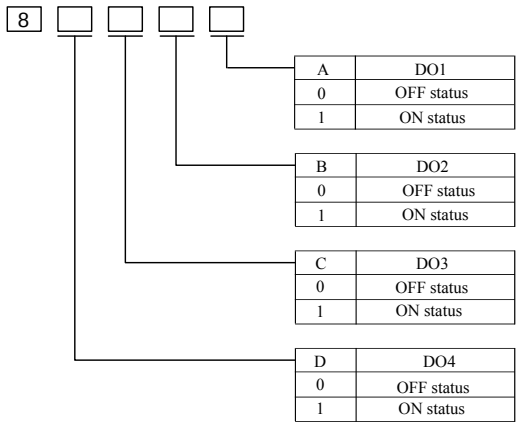	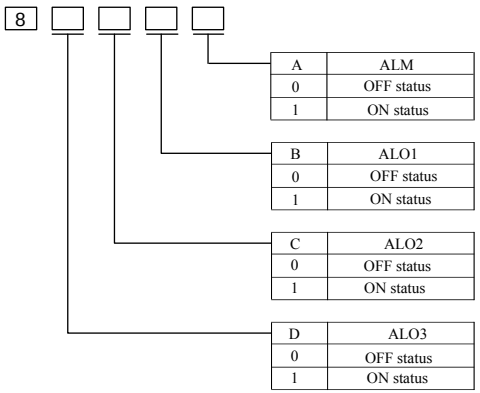

4.6 Example of I/O signal (CN3) connections

4.6.1 Example of analog speed mode

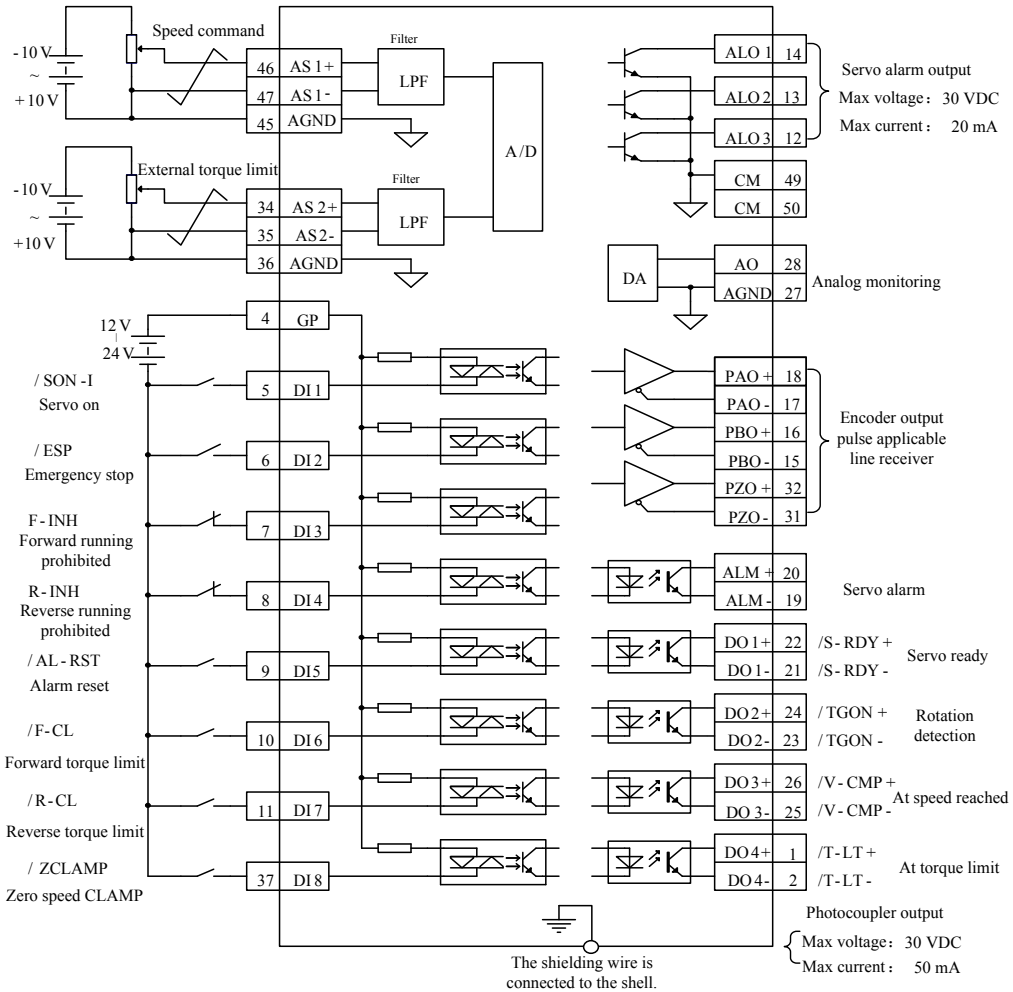

Fig 4-6-1 connection of analog speed mode

Note:

1 represents twisted-pair wires.

2 The 24 VDC power supply is not included. Users should supply an external 12~24VDC power.

3 DI1~DI8 terminals are programmable input terminals, and DO1~DO4 terminals are programmable output terminals. Users can redefine them by the situations.

4.6.2 Example of position pulse mode

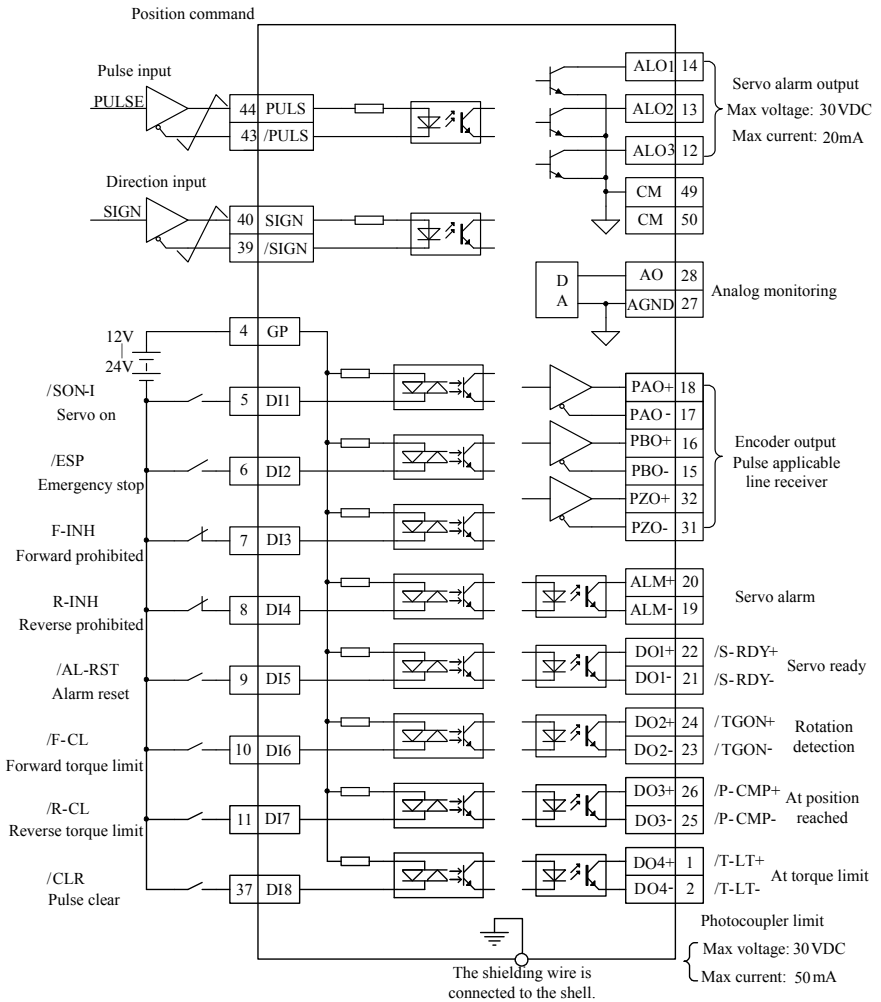

Fig 4-6-2 Connection of position pulse mode

Note:

1 represents twisted-pair wires.

2 The 24 VDC power supply is not included. Users should supply an external 12~24VDC power.

3 DI1~DI8 terminals are programmable input terminals, and DO1~DO4 terminals are programmable output terminals. Users can redefine them by the situations.

4 The status of position command is set by the parameter Po300, differential signal is shown in this example.。

5 The command of this example is 5V differential signal, if users need to adopt other interface type, please refer to 4.4.3.

4.6.3 Example of internal register position mode

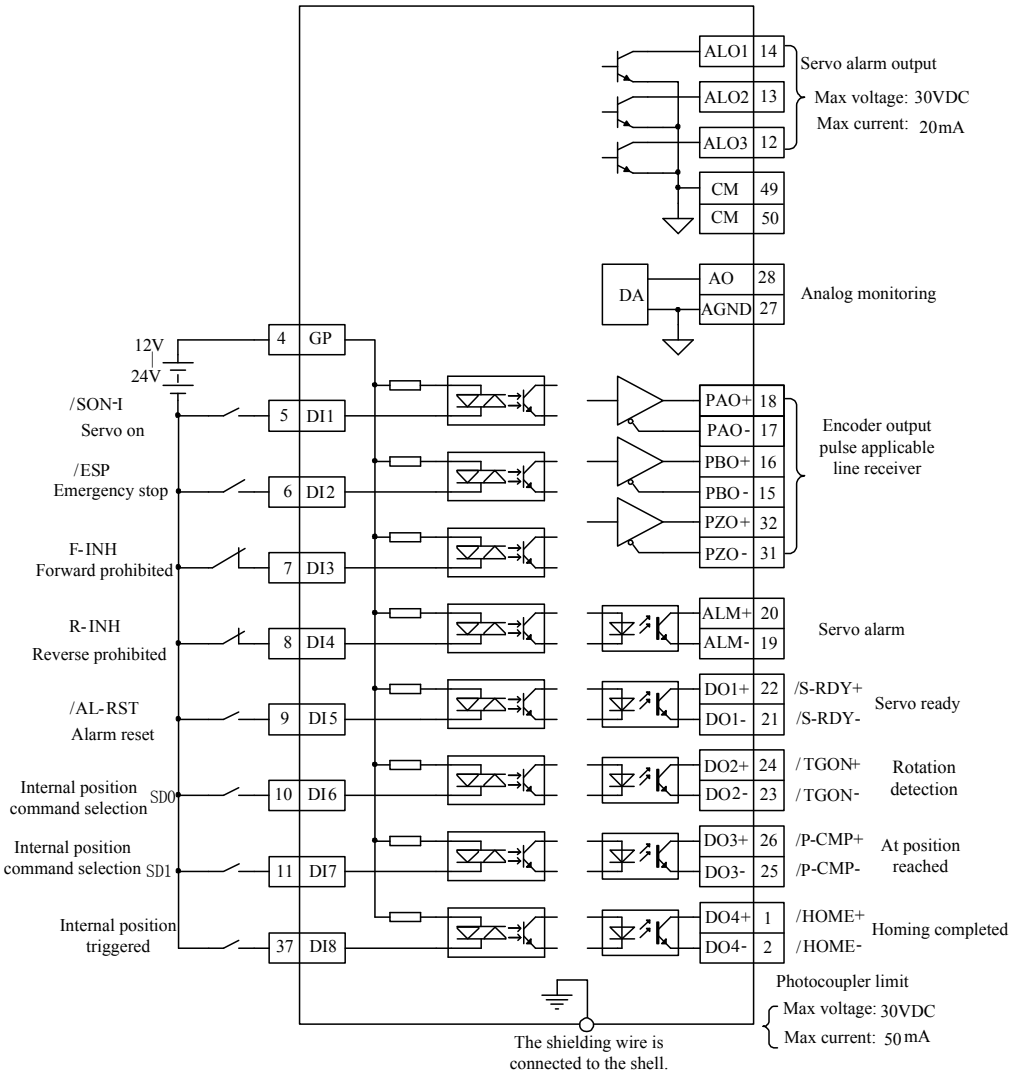

Fig 4-6-3 connection of internal position pulse mode

Note:

1 represents twisted-pair wires.

2 The 24 VDC power supply is not included. Users should supply an external 12~24VDC power.

3 DI1~DI8 terminals are programmable input terminals, and DO1~DO4 terminals are programmable output terminals. Users can redefine them by the situations.

4.6.4 Example of analog torque mode

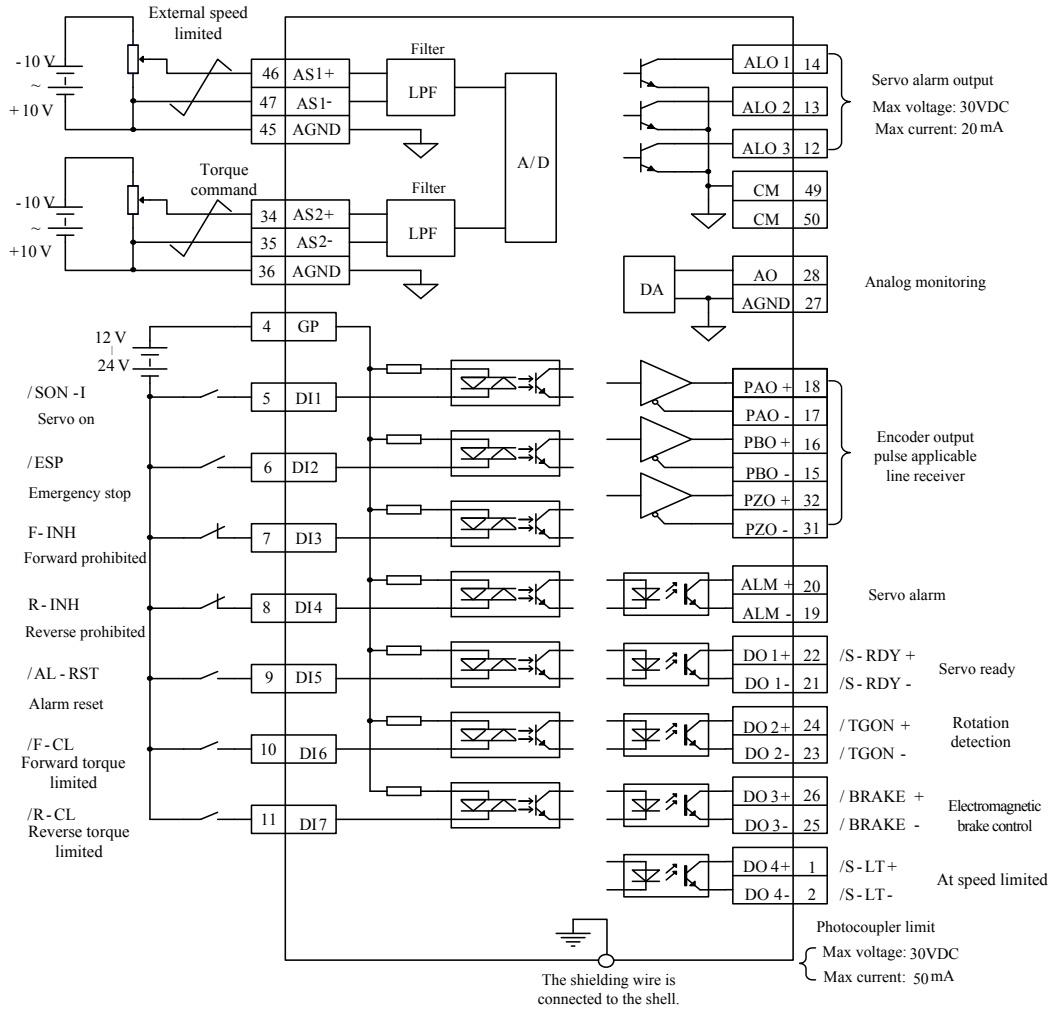

Fig 4-6-4 Connection of analog torque mode

Note:

1 represents twisted-pair wires.

2 The 24 VDC power supply is not included. Users should supply an external 12~24VDC power.

3 DI1~DI8 terminals are programmable input terminals, and DO1~DO4 terminals are programmable output terminals. Users can redefine them by the situations.

4.6.5 Example of internal register speed mode

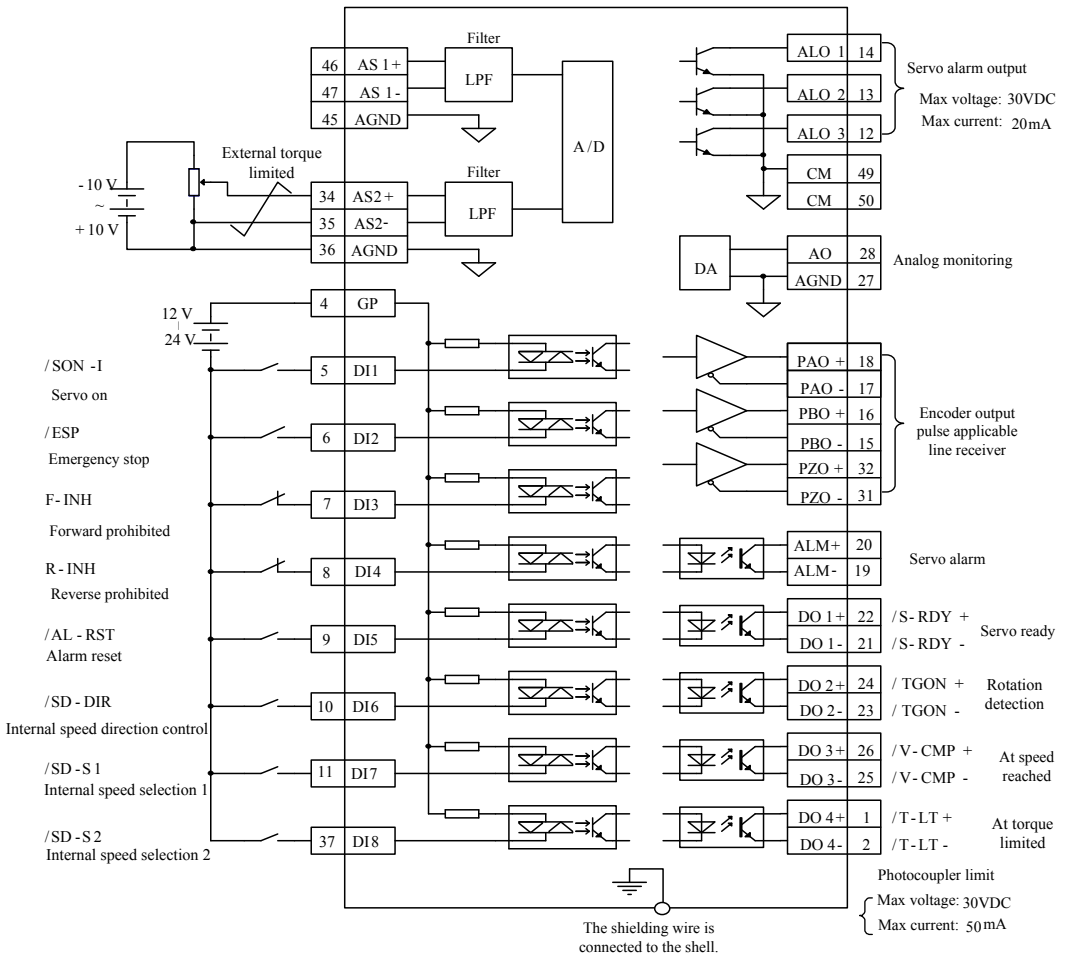

Fig 4-6-5 Connection of internal speed mode

Note:

1 represents twisted-pair wires.

2 The 24 VDC power supply is not included. Users should supply an external 12~24VDC power.

3 DI1~DI8 terminals are programmable input terminals, and DO1~DO4 terminals are programmable output terminals. Users can redefine them by the situations.

4.6.6 Example of internal register torque mode

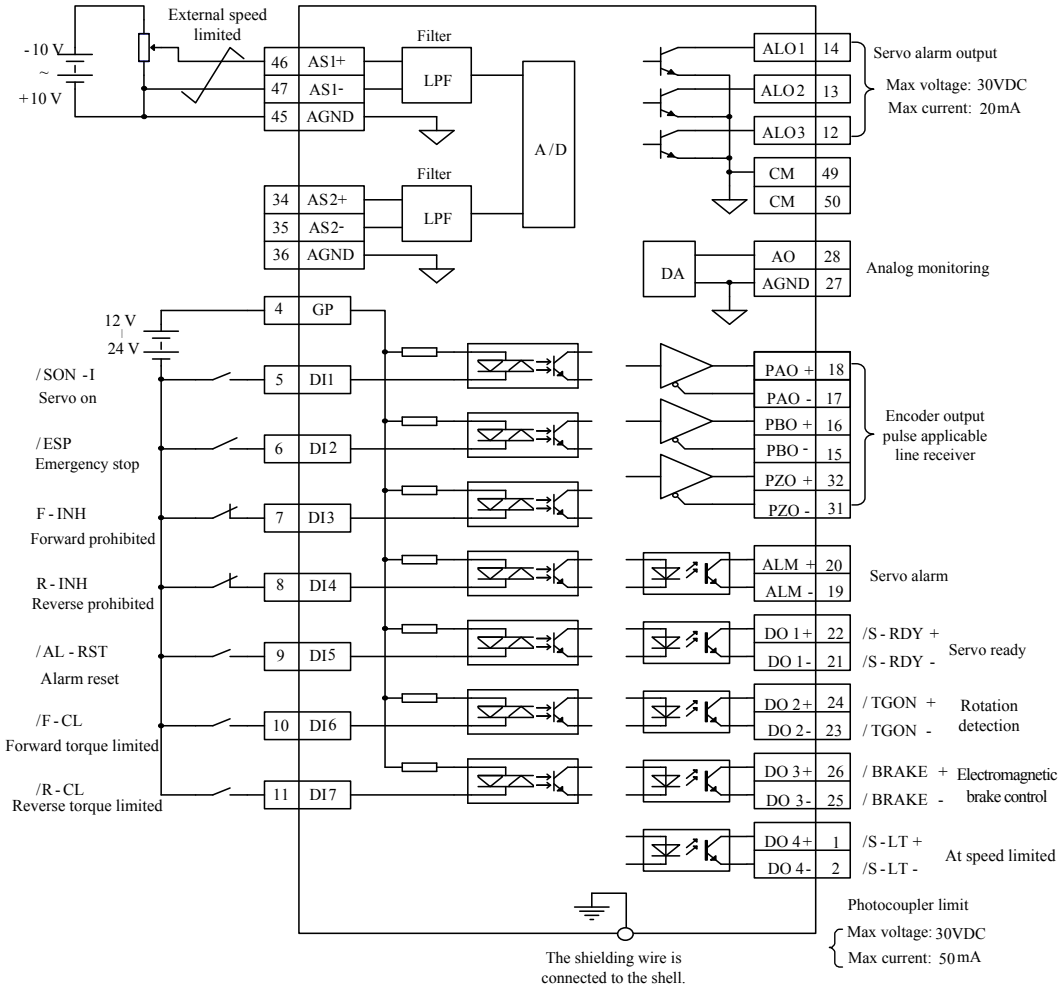

Fig 4-6-6 connection of internal register torque mode

Note:

1 represents twisted-pair wires.

2 The 24 VDC power supply is not included. Users should supply an external 12~24VDC power.

3 DI1~DI8 terminals are programmable input terminals, and DO1~DO4 terminals are programmable output terminals. Users can redefine them by the situations.

4.7 Wiring of electromagnetic brake

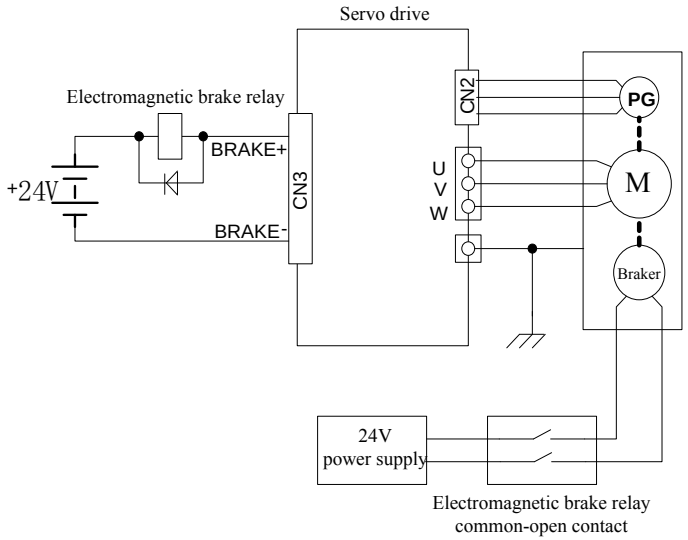

Fig 4-7-1 Brake usage

Note:

1 The internal electromagnetic is only valid when servo is in the stop status.

2 The coil of electromagnetic has no polarity.

3 The power supply of electromagnetic is supplied by users. The voltage is 24VDC (±10%) and the current should be higher than 1A. And electromagnetic and control signal are forbidden using one power supply.

4.8 Wiring when using more than one servo

Connect the alarm output (ALM) terminals for the three Servodrives in series to enable alarm detection relay RLY to operate. When the alarm occurs, the ALM output signal transistor is turned OFF.

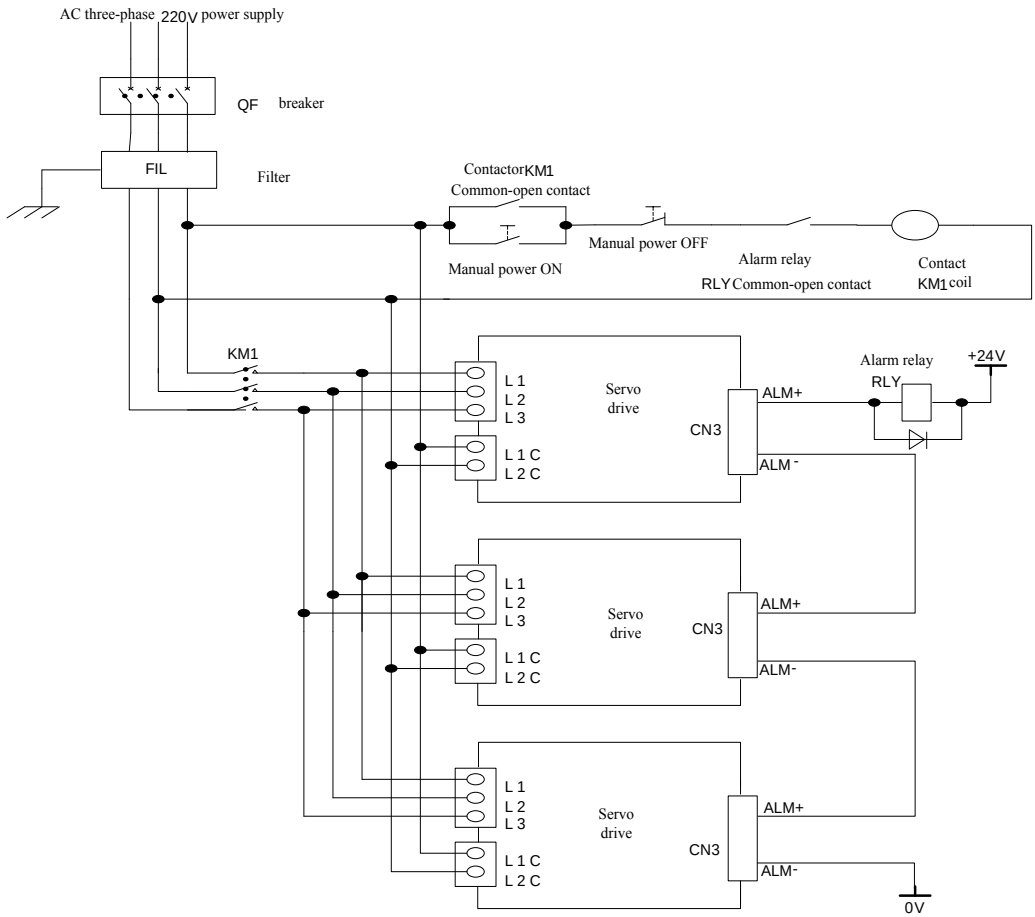

Fig 4-8-1 wiring when using more than one servo

V. Operation and parameters

5.1 Description of the digital keypad

5.1.1 Instruction of digital keypad

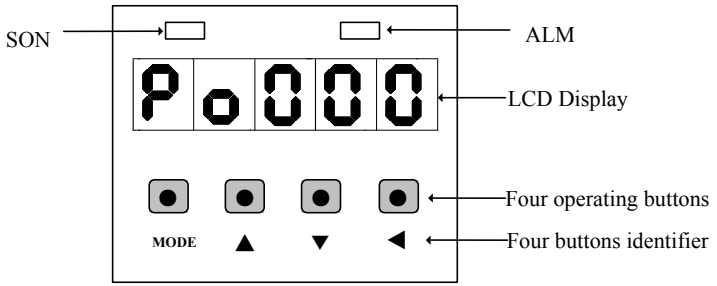

Fig 5-1-1 Digital keypad

5.1.2 Keypad function

Identifier	Name	Function
SON	Charge LED (green)	Indicating that Servo is on.
ALM	Charge LED (red)	Indicating that malfunction occurs.
PANAL	LCD Display	The LCD display (5-digit, 7-step display panel) shows the monitor codes, parameter settings and operation values of the AC servo drive.
MODE	Mode key	1 Switching between function groups. 2 Displaying malfunction codes in turn.
▲ （UP）	UP key	1 Pressing UP key to increase the display value. 2 Continuously pressing UP key for 0.5s to increase setting value slowly. 3 Continuously pressing UP key for 1s to increase setting value rapidly. 4 Used to forward start in jogging run.
▼ (DOWN)	DOWN key	1 Pressing DOWN key to decrease the display value. 2 Continuously pressing UP key for 0.5s to decrease setting value slowly. 3 Continuously pressing UP key for 1s to decrease setting value rapidly. 4 Used to reverse start in jogging run.
◀ （SET）	shift/set key	1 Continuously pressing this key for 0.5s to enter into parameter setting mode 2 Pressing this key can move the cursor to the left and then change parameter settings (blinking digits) by using arrow keys. 3 Continuously pressing this key for 0.5s to confirm and set current value into the parameter. 4 Continuously pressing this key for 2s to reset the malfunction.

5.2 Parameters instructions

5.2.1 Parameters setting display and representation method

The representation method in this manual is Po001.

The hollow digitron represents blinking operating digits, which is the adjustable digits.

5.2.2 Parameters display and quote type

☞In this manual, three parameters modes is adopted to introduce the parameters.

☞□□□□□ represents five operating digits in keypad.

■ one parameter mode (if no special instruction, the parameters belong to this mode)

□ □ □ □ □ one parameter mode means that five digits represent one parameter.
Q

For example:

Ex 1：Po113 internal speed given 1 is 1000r/min，the display content is:

（The unit is 0.1 r/min） The quoting mode is Po113=1000.

Ex 2：Po114 internal speed given 2 is -1000r/min，the display content is:

（The unit is 0.1 r/min） The quoting mode is Po114=-1000。

Note: if all decimal points are lit, the current value is negative value.

■ Two parameters mode

d □ □ □ □ Two parameters mode means every two digits except the first digit is an adjustable parameter digit.
Y X

X and Y represent an adjustable parameter digit separately.

For example:

Ex: Po407 CN3-5 terminal function is alarm-reset. The display content is:

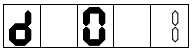

The quoting mode is Po407.X=1.

■ **Four parameters mode**

b □ □ □ □ Four parameters mode means each digit except the first digit is an adjustable parameter digit.

D C B A

A, B, C and D represent an adjustable parameter digit separately.

Ex: in position mode, the pulse command type of pulse+pulse is selected, then the last digit of Po300 is set to1.

The display content is:

The quoting mode is Po300.A=1.

5.2.3 Explanation Method for Parameter Setting Type

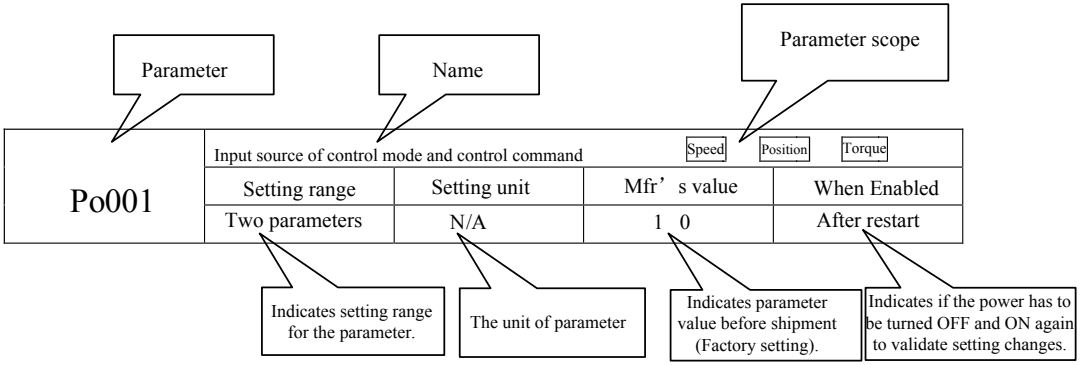

Note: parameter scope means control mode for which the parameter is available

Speed means speed mode; Position means position mode; Torque means torque mode.

5.3 keypad operating procedure

5.3.1 Switchover between parameter section

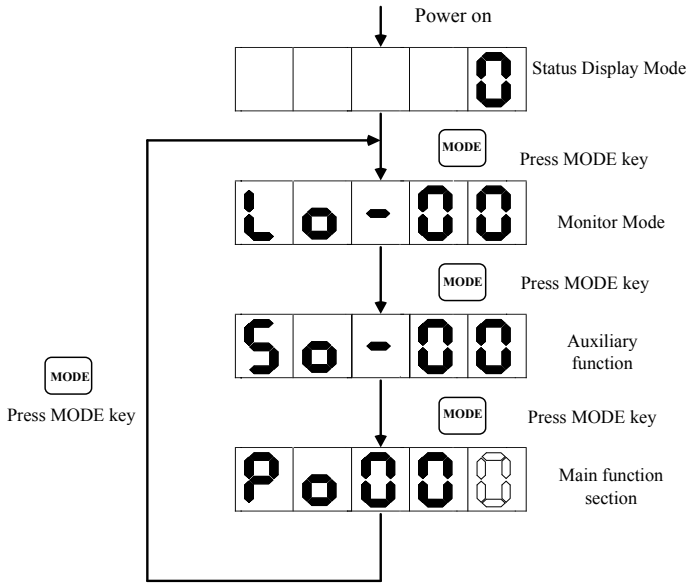

Fig 5-3-1 Switchover between parameter section

After main circuit is powered on, servo status display So-09 is displayed in the keypad, the Mfr‘s value of which is servo output current. The display content will switch among monitor function section, auxiliary function section, and main function section by pressing MODE key.

5.3.2 Example of monitor function parameter

Take usage of Lo-14(DI8~DI5 status display）as the example:

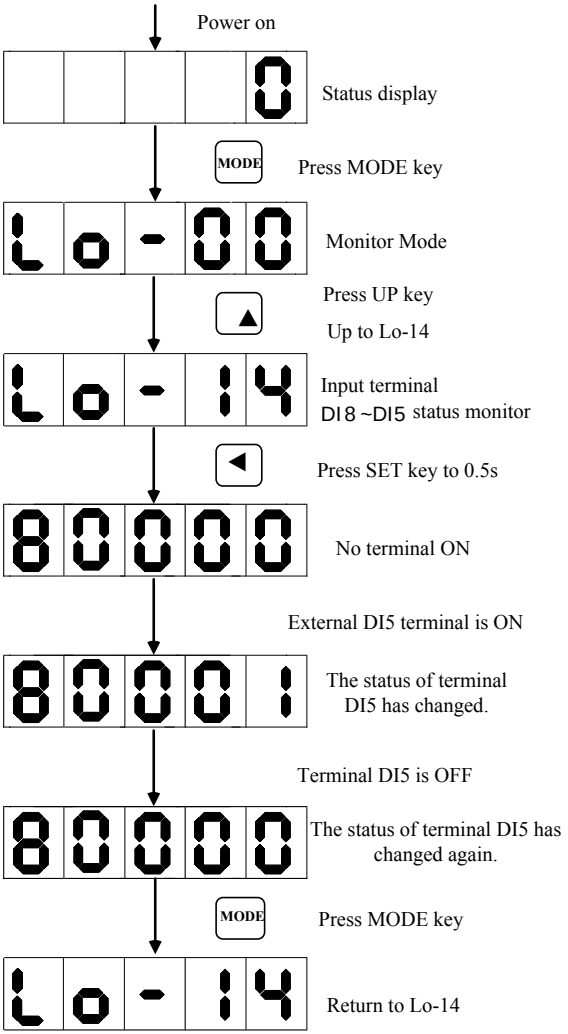

Fig 5-3-2 Monitor terminal status mode

5.3.3 Example of auxiliary parameters usage

Take usage of So-14（JOG run）as the example:

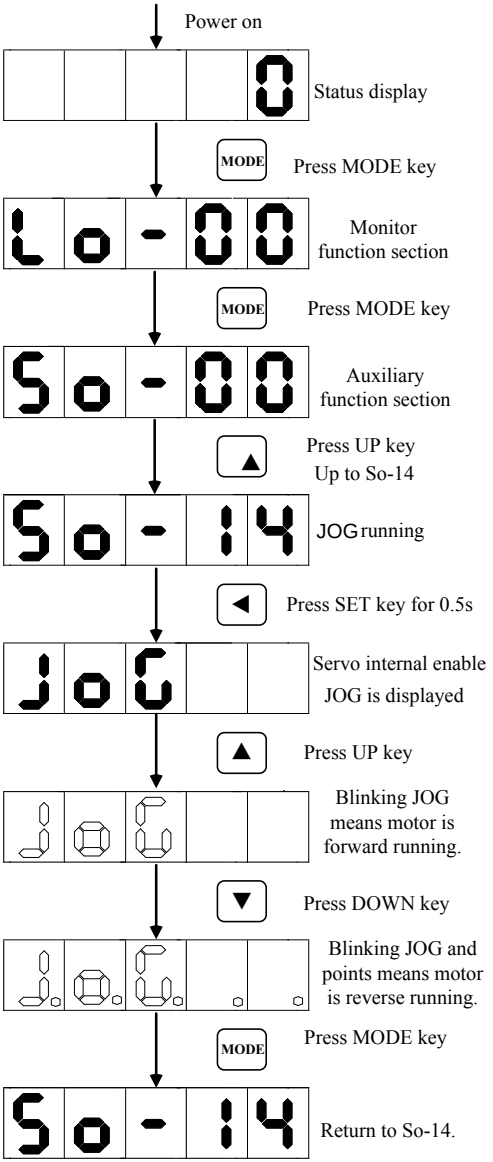

Fig 5-3-3 Jog run

5.3.4 Parameter setting

Take setting parameter Po001 as the example:

When Po001.Y=0, set motor rotating clockwise to forward direction. When Po001.X=3, analog speed mode is selected.

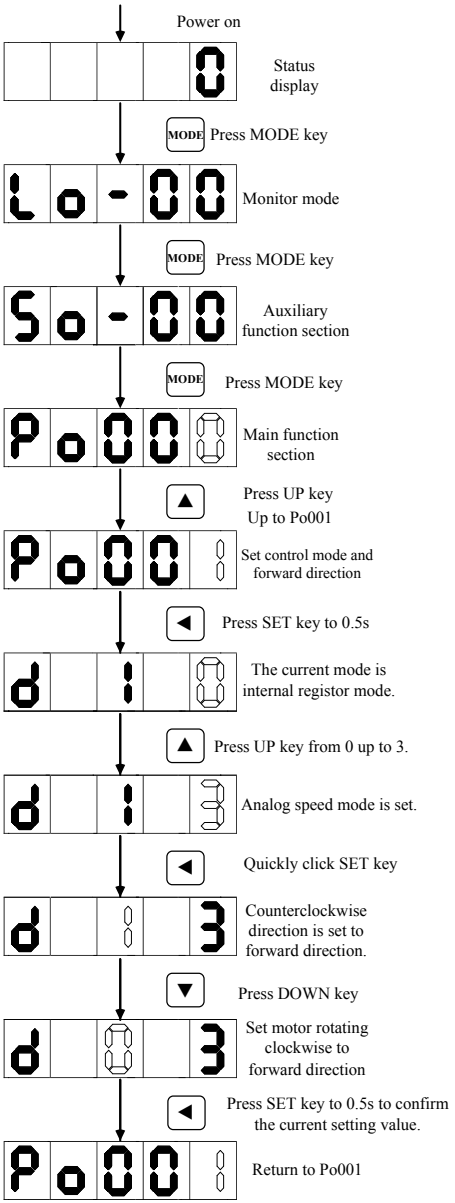

Fig 5-3-4 Parameter setting procedure

VI. Operation

6.1 Trial operation

Make sure that all wiring has been completed prior to trial operation.

Perform the following three types of trial operation in order. Instructions are given for speed control mode (standard setting) and position control mode. Unless otherwise specified, the standard parameters for speed control.

1 Jog trial operation by keypad

The servo motor is operated without connecting the shaft to the machine in order to confirm that the following wiring is correct.

- Wiring of power supply
- Wiring of servo motor
- Wiring of encoder

2 Trial Operation for Servo motor by command controller (PLC)

The servo motor is operated without connecting the shaft to the machine in order to confirm that the following wiring is correct.

- I/O signal wiring between the servodrive and the command controller.
- Motor‘s rotation direction, motor speed, and number of rotations.
- Check the operation of the brake, overtravel, and other protective functions.

3 Trial Operation for the Servo motor and Machine Combined.

The servo motor is connected to the machine and trial operation is performed. The servodrive is adjusted to match the machine characteristics.

- The servo motor‘s rotation direction, motor speed, and machine travel distance.
- Set the necessary parameters.

Operation procedure:

1. Connect the power supply control circuit (L1C and L2C), power supply main circuit (L1, L2, and L3), servo motor wiring (U, V, W), and encoder wiring (CN2). Connect I/O signal (CN3) to servo drive.
2. Turn ON the power. Check the panel operator to make sure that the servodrive is running normally.
3. Execute jog mode operation with the servo motor alone under a no-load condition.
4. Use the internal monitor function to check the input signals. Turn ON the power, and check the emergency stop, brake, overtravel, and other protective functions for correct operation.
5. Input the servo ON signal, and turn ON the servo motor.
6. Input the command for the control mode being used, and check the servo motor for correct operation.
7. Turn OFF the power, and then connect the servo motor to the machine.
8. Using the same procedure as you did to input a command in step 6, operate the servo motor from the command controller and set the parameter so that the machine’s travel direction, travel distance, and travel speed all correspond to the command.
9. The servo motor can now be operated. Adjust the servo gain if necessary.

6.1.1 Jog operation procedure

Servo is in a special speed mode while jogging operation.

Step	Content	Remarks
1	Check wiring of main circuit and power supply of control circuit (L1C, L2C) is powered on, and power supply of main circuit (L1, L2, L3) is powered on.	
2	Press MODE key, to enter auxiliary function section So-□□	Please refer to 5.3.1
3	Press UP or DOWN key to find So-13 (Jog speed)	The Mfr's value is 100r/min
4	Press SET key for 0.5s to enter setting interface, to set safety value of jog speed by press UP or DOWN key.	Note: the unit of speed is 0.1r/min.
5	Press SET key for 0.5s to confirm the setting speed, and return to So-13.	
6	Press UP key to display So-14 (jog run）	
7	Press SET key for 0.5s to jog run.	JOG is displayed, servo is enabled.
8	Press UP key to jog forward run; press DOWN key to jog reverse run.	To confirm rotating direction.
9	Press MODE key, and servo is OFF, to quit JOG mode.	

Note: 1 Jog mode is a special speed mode, the jog speed is related to deceleration time Po109, Po110.

2 Jog mode is not limited by forward/reverse prohibited, please make sure it is safe.

3 Please refer to 5.3.3 about procedure of jog operation.

6.1.2 Run procedure of analog speed mode

Please refer to fig 6-1-1 about wiring of external signal.

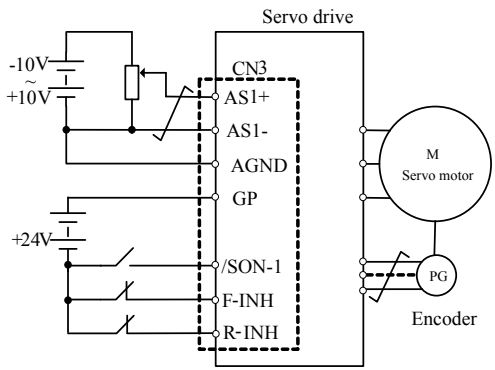

Fig 6-1-1 System diagram in analog speed mode

Step	Content	Remarks
1	Check main circuit wiring, power on control circuit (L1C, L2C) after confirmation of input signal circuit wiring.	Please refer to Fig 6-1-1. Before power on, set analog speed command input to 0V.
2	Confirm that the display value of Po001.X is 3. If it is not, please set this parameter again and restart the servo to make the setting value valid.	Please check Po400 analog speed command correspondence to max speed set. The default value is 10V correspondence to 3000r/min.
3	Main circuit is powered on, and set input signal /SON-I to ON status.	Please check SON indicator light is lit. If it is lit, it indicates servo motor is ON, if it is not lit, please check the wiring.
4	Increase the input voltage of speed command from 0V slowly.	If motor starts running when the voltage is 0V, please adjust Po402 analog speed command zero drift compensation. Please refer to 6.4.1.
5	Check and record the value of Lo-12 (analog speed command display)	
6	Check and record motor speed Lo-02	
7	Make sure whether two speeds in step 5 and 6 are almost the same.	Confirm the value many times by adjusting input voltage of analog speed command, which can make sure the parameters set correctly.
8	Confirm that speed command correspondence to max speed and motor rotating direction.	
9	If speed command input is set to 0V and motor speed is 0 which indicates that the trial operation of motor without load has been completed.	

6.1.3 Run procedure of position pulse mode

Please refer to fig 6-1-2 about wiring of external signal.

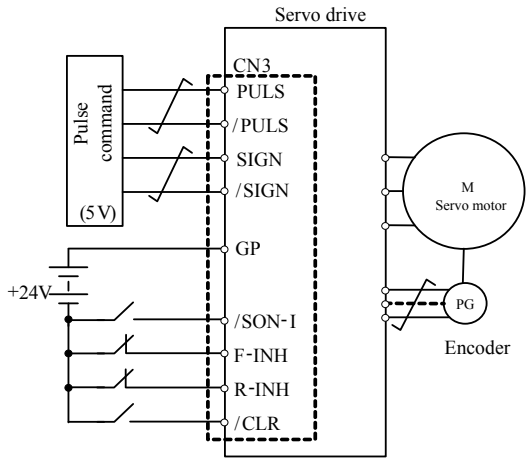

Fig 6-1-2 System diagram in position pulse mode

Step	Content	Remarks
1	Check main circuit wiring, power on control circuit (L1C, L2C) after confirmation of input signal circuit wiring.	Please refer to 6-1-2. Please refer to 6.5.1 about wiring of 24V pulse command.
2	Confirm that the display value of Po001.X is 1. If it is not, please set this parameter again and restart the servo to make the setting value valid.	
3	Set the input status of servo position pulse command according to output status of command controller.	Please refer to Po300 to set command pulse status. In trial operation, the numerator and denominator of electronic gear use the default value 1.
4	Main circuit is powered on, and set input signal /SON-I to ON status. Servo motor enters into locking status.	Please check SON indicator light is lit. If it is lit, it indicates servo motor is ON, if it is not lit, please check the wiring.
5	Set command controller to send 10000 pulse.	Take the servo motor with 2500 pulse/rev encoder as the example, it needs 10000 pulse commands to complete a rotation.
6	Confirm whether motor shaft completes one rotation. If pulse command is stopped inputting, servo motor enters lock status.	
7	Check Lo-04 (motor feedback pulse numbers display low 5 digits.) and Lo-08 (given pulse numbers display low 5 digits.), the both numbers are 10000.	
8	If frequency of command pulse is hHz, the theoretical value of corresponding rotation speed V1 is h×60÷10000 （r/min）	Motor rotation speed should be limited within 100 r/min safe speed.

9	Confirm motor speed V2 by motor rotation speed (Lo-02).	
10	Confirm whether the value of V1 equals to V2.	
11	Confirm whether the direction of command controller is the same as the rotating direction of servo motor.	Under the situation of not changing command controller, the step 11 can be realized by modifying the value of Po001.Y.
12	If pulse command is stopped inputting, servo motor enters lock status. Trial run is completed.	

6.1.4 Trial Operation with the Servo motor Connected to the Machine

WARNING

■Follow the procedure below for trial operation precisely as given.
Malfunctions that occur after the servo motor is connected to the machine not only damage the machine, but may also cause an accident resulting death or injury

1 Check the mechanical configuration related to protective function such as overtravel and brake.

2 Set the necessary parameters for control mode used.

3 Connect the servo motor to the machine while the power is turned OFF.

4 Check that the servodrive is servo OFF status and then turn ON the power to command controller. Check that the protective function operates normally.

5 Conduct trial operation.

6 Adjust the servo gain and improve the servo motor response characteristics, if necessary.

6.2 Selection of control mode

（1）Control mode setting

Po001	Control mode and forward direction setting		Speed position torque	
	Setting range	Setting unit	Mfr‘s value	When enabled
	Two-parameter	N/A	1 0	After restart

（2） Instruction of control mode selection

Po001 is two-parameter mode, the control mode selection is controlled by Po001.X.

Parameter	Instruction	Remark
Po001= d □ 0	Internal register speed mode	Please refer to 6.7
Po001= d □ 1	Position pulse mode	Please refer to 6.5
Po001= d □ 2	Internal register torque mode	Please refer to 6.8
Po001= d □ 3	Analog speed mode	Please refer to 6.4
Po001= d □ 4	Analog torque mode	Please refer to 6.6
Po001= d □ 5	Internal register position mode	Please refer to 6.5

6.3 Setting general function

6.3.1 Setting password

So-01	Setting password (Avoid modifying parameters by mistake) speed position torque			
	Setting range	Setting unit	Mfr‘s value	When enabled
	0~9999	N/A	0	restart

Setting password is used to avoid modifying parameters by mistake. The mfr‘s value is 0, which means password is invalid and users can modify parameters anytime. If users want to use this function, please set a password for this parameter and restart servo, then this function is valid.

Most auxiliary function and main function parameters except monitor function parameters can be modified when the password is input into this parameter. Or else Err will display.

6.3.2 Servo drive status display

So-09	Servo drive status display speed position torque			
	Setting range	Setting unit	Mfr‘s value	When enabled
	0~15	N/A	0	Effective Immediately

This parameter is used to set default display content in keypad. Please refer to next table about the display item:

0 Servo drive output current	1 Servo drive bus voltage	2 Servo motor rotating speed
3 Servo motor feedback pulse displays high 5 digits.	4 Servo motor feedback pulse displays low 5 digits.	5 Servo motor feedback rotation displays high 5 digits.
6 Servo motor feedback rotation displays low 5 digits.	7 Given command pulse numbers display high 5 digits.	8 Given command pulse numbers display low 5 digits.
9 Given command pulse error numbers	10 Given speed	11 Given torque
12 Analog speed command display	13 Analog torque command display	

6.3.3 Reverting to mfr’s value

So-49	Reverting to mfr‘s value speed position torque			
	Setting range	Setting unit	Mfr‘s value	When enabled
	0: not reverting to mfr‘s value 1: reverting to mfr‘s value	N/A	0	restart

When there is disorder with parameters and mfr‘s value need to be restored, set So-49=1.

The procedure is to set So-49=1 and press SET key for 0.5s. After 5 seconds, all parameters revert to mfr‘s value.

⚠ **Note:**

The default setting is internal register speed mode. Please set the related parameters again according to the situation before using servo to avoid the damage of equipment.

6.3.4 Setting the servo on signal

Po004	Servo enabled mode selection speed position torque			
	Setting range	Setting unit	Mfr‘s value	When enabled
	0: External terminal enabled 1: Internal terminal enabled	N/A	0	Restart

Servo enabled mode is controlled by Po004.

(1) When Po004=0, servo enabled function is controlled by external terminal SON-I.

(2) When Po004=1, servo enabled function is controlled by the parameter Po100.

Po100	Internal enabled setting speed position torque			
	Setting range	Setting unit	Mfr‘s value	When enabled
	0: Disabled 1: Enabled	N/A	0	Effective Immediately The setting value is not saved after power off.

When Po100=1, servo drive is always in the status of servo on. Care must be taken because the servo drive can operate as soon as the power is turned ON. For security reason, the value will turn to 0 after restart.

6.3.5 Switching the Servo motor Rotation Direction

The default setting for ―forward rotation” is counterclockwise as viewed from the servo motor shaft. The mfr‘s value of Po001.Y is 1. When Po001.Y is set to 0, the forward rotation is clockwise as viewed from the servo motor shaft.

Po001.Y=1， forward rotation is counterclockwise.	Po001.Y=0, forward rotation is clockwise.
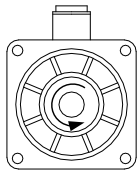	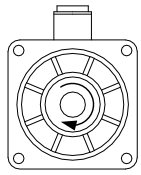

6.3.6 Setting the Overtravel Limit Function

The overtravel limit function forces movable machine parts to stop if they exceed the allowable range of motion. The function adopts a limit switch or a photoelectric switch. As soon as the servo drive detects the on/off signal from the limit switch, it will force the speed in the present direction to turn to 0, but it does not work for the speed of opposite direction.

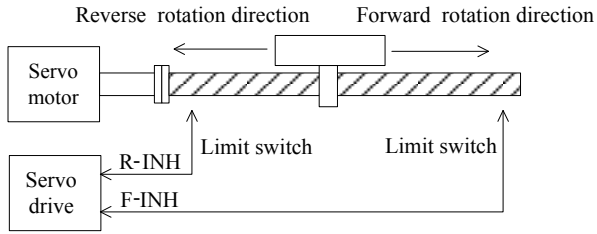

Fig 6-3-1 Overtravel Limit Function

(1) Input signal

Signal name	Code	Default terminal	Remarks
Forward run prohibited	F-INH	CN3-9	Forbidden servo drive forward run.
Reverse run prohibited	R-INH	CN3-8	Forbidden servo drive reverse run.

(2) Setting related parameter

So-17	Forward run prohibited			speed position torque
	Setting range	Setting unit	Mfr's value	When enabled
	0: Prohibited invalid 1: Prohibited valid	N/A	1	Effective Immediately

So-18	Reverse run prohibited			speed position torque
	Setting range	Setting unit	Mfr's value	When enabled
	0: Prohibited invalid 1: Prohibited valid	N/A	1	Effective Immediately

(1) Enabled the overtravel signal

When So-17=1, So-18=0 and external control terminals with the function of F-INH and R-INH are allocated, the overtravel function is enabled. For security, the default setting of So-17 and So-18 are prohibited valid and the signal input type is common-close contact. So even malfunction occurs, the overtravel protection is still valid.

(2) Disable the overtravel signal

When So-17=0 and So-18=0, the overtravel function is disable. If the input terminals with the function of F-INH and R-INH are not allocated, the overtravel function is disable.

(3) Setting the stop torque for overtravel

Po207	Forward/reverse run prohibited and emergency stop torque			speed position torque
	Setting range	Setting unit	Mfr's value	When enabled
	1~300	1% of rated torque	100	Effective Immediately

When forward/reverse run prohibited signal or emergency stop signal is valid, the max value of instantaneous reverse stop torque of servo motor is limited within the range of this value, and this value is an absolute value, it works on both forward run and reverse run.

6.3.7 Setting the braking

The braking types of servo drive include three kinds: 1.dynamic braking 2.energy-consumption braking 3. Electromagnetic braking.

! Caution
★ Energy-consumption braking is valid after main circuit is powered on. ★ Electromagnetic braking starts after servo OFF. If it is not, overload malfunction will occur. ★ Dynamic braking starts after servo OFF or main circuit is powered off. But if motor rotation speed is too high, dynamic braking resistor will be overheat.

（1）Dynamic braking

Dynamic braking is a common way to stop servo motor. It is a kind of special energy-consumption braking mode. The braking circuit includes dynamic braking resistor and diode. The method of dynamic braking is to short-connect drive line coil of servo motor, to shorten motor mechanical feed distance by modes of energy consumption braking finally.

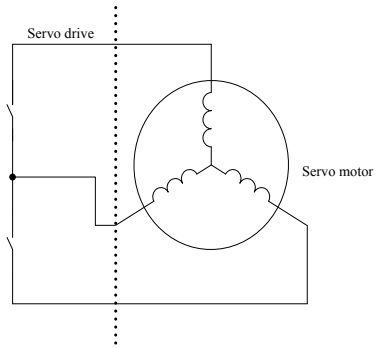

Fig 6-3-2 Dynamic braking

1）Setting function

So-07	Servo OFF stop mode speed position torque			
	Setting range	Setting unit	Mfr‘s value	When enabled
	0: Coast to a stop 1: Dynamic braking	N/A	0	Effective Immediately

2）Related parameter

So-08	Dynamic braking delay time speed position torque			
	Setting range	Setting unit	Mfr‘s value	When enabled
	100~30000	0.1ms	5000	Effective Immediately

(2) Energy consumption braking

Motor is in the state of energy regeneration during deceleration or stop process, which converts mechanical energy into electrical energy. The energy feedback works on bus line by inverting circuit, which leads to the voltage of bus line higher. When the voltage is too high, the components in the servodrive will be damaged. The method of energy consumption braking is to consume feedback energy into heat energy by braking resistor.

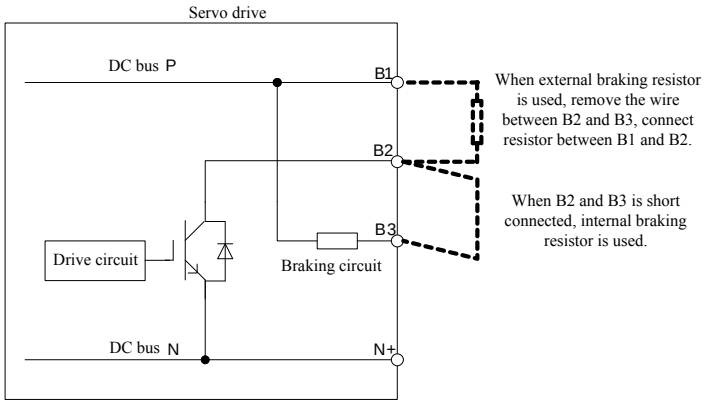

Fig 6-3-3 Wiring of energy consumption braking

Some servo drives have built-in braking resistor, if users need to use external braking resistor, please set the following both parameters:

So-04	Resistance value of braking resistor			speed position torque
	Setting range	Setting unit	Mfr‘s value	When enabled
	20~1000	Ω	—	Effective Immediately

So-05	Discharge duty ratio			speed position torque
	Setting range	Setting unit	Mfr‘s value	When enabled
	0~100	%	50	Effective Immediately

Please refer to next table for built-in braking resistor and min resistor value of external braking resistor.

Servo drive structure code	Built-in resistor value and power	Min resistor value of external braking resistor	Specification of external braking resistor
M1	None	40Ω	60Ω/200 W
M2	50W/50Ω	25Ω	40Ω/ 400 W
M3	100W/20Ω	15Ω	15Ω/ 1000 W
M4	260W/10Ω	10Ω	15Ω/ 2000 W

(3) Electromagnetic braking

Electromagnetic braking is suitable for servo motor with brake, which can make sure machine not move because of self weight when servo is OFF. Specifically, servodrive controls braking system to lock servo motor shaft by controlling BRAKE signal. Please refer to the chapter 4.7.

Signal name	Code	Terminals	Remarks
Electromagnetic braking control	BRAKE	BRAKE+ BRAKE -	Electromagnetic braking control output.

So-02	Delay time for electromagnetic braking start speed position torque			
	Setting range	Setting unit	Mfr's value	When enabled
	0~30000	10ms	10	Effective Immediately

So-03	Delay time for electromagnetic braking stop speed position torque			
	Setting range	Setting unit	Mfr's value	When enabled
	5~30000	10ms	100	Effective Immediately

Delay time for electromagnetic braking start is the delay time from servo ON status to braking starting status.

Delay time for electromagnetic braking stop is the delay time from servo OFF status to braking stopping status.

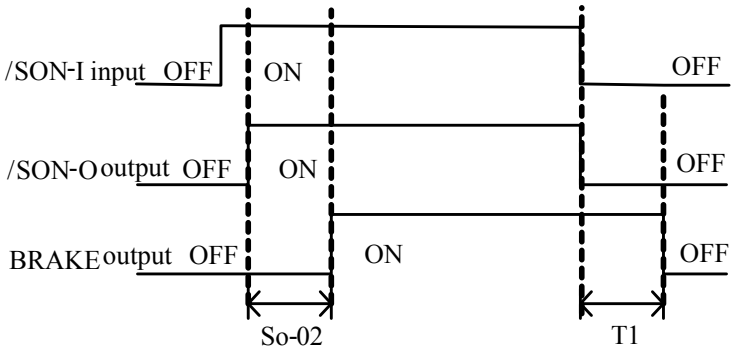

Fig 6-3-4 Electromagnetic brake sequence diagram

Note: after servo enabled is off, T1 is the lower value of So-03 and the time taken by speed arriving to 30r/min.

6.3.8 Encoder disconnect protection

This fuction is valid in all control mode, after servo ON, servodrive will test whether the encoder is connected well.

So-15	Encoder disconnect protection speed position torque			
	Setting range	Setting unit	Mfr‘s value	When enabled
	0: invalid 1: valid	N/A	0	Effective Immediately

6.3.9 Analog monitor output

(1) Output signal

Signal name	Code	Terminal	Remarks
Analog monitor output	AO	CN3-28	Analog monitor output
Grounding of analog power supply	AGND	CN3-27	

(2) Setting analog monitor signal

So-19	analog monitor function selection speed position torque			
	Setting range	Setting unit	Mfr‘s value	When enabled
	0~2	N/A	0	Effective Immediately

Parameter setting	Output analog contents	Remarks
So-19=0	Servo drive output current	Servodrive output current corresponding to 10V is controlled by So-20.
So-19=1	Servo drive bus voltage	Servodrive max bus line voltage corresponding to 10V is controlled by So-21.
So-19=2	Servo motor rotation speed	Servo motor rotation speed corresponding to 10V is controlled by So-22.

（3）Related parameter

So-20	Servodrive output current corresponding to 10V speed position torque			
	Setting range	Setting unit	Mfr‘s value	When enabled
	1~1000	0.1A	200	Effective Immediately

So-21	Servodrive max bus line voltage corresponding to 10V speed position torque			
	Setting range	Setting unit	Mfr‘s value	When enabled
	1~500	1V	500	Effective Immediately

So-22	Max rotation speed corresponding to 10V			speed position torque
	Setting range	Setting unit	Mfr‘s value	When enabled
	1~32000	0.1r/min	30000	Effective Immediately

（4）Analog monitor voltage compensation

Actual analog voltage is compensated by So-24.

So-24	Analog monitor voltage compensation			speed position torque
	Setting range	Setting unit	Mfr‘s value	When enabled
	0~±1000	—	0	Real time updating

Analog monitor voltage compensation updates in real time, users can confirm and adjust the signal at the same time. After adjustment is finished, please press SET key for 0.5s, save it and quit.

6.4 Analog speed mode

6.4.1 Setting parameters

Parameters		Remarks
Po001	d □ 3	Control mode selection: analog speed mode

Po400	Max speed corresponding to analog voltage			speed
	Setting range	Setting unit	Mfr‘s value	When enabled
	1~10000	r/min	3000	Effective Immediately

Set the speed value when analog voltage is 10V.

The slope equals to the ratio of 10V/setting value of Po400.

Please refer to the right figure about the mfr‘s setting:

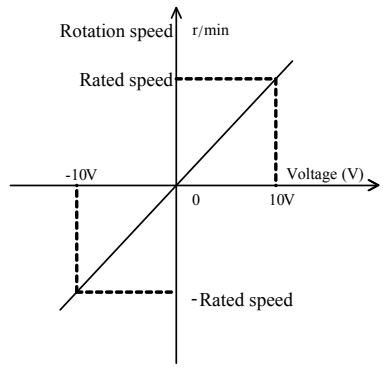

Po402	Analog speed command zero drift compensation			speed
	Setting range	Setting unit	Mfr‘s value	When enabled
	0~±32000	0.1r/min	0	Effective Immediately

Analog speed command zero drift compensation is to eliminate analog speed command zero drift.

The setting method is as following:

（1）Short-connect AS1+ to AGND and AS1- to AGND.

（2）In the mode of analog speed, adjust Po402 to make Lo-12 to 0.

Please refer to right figure:

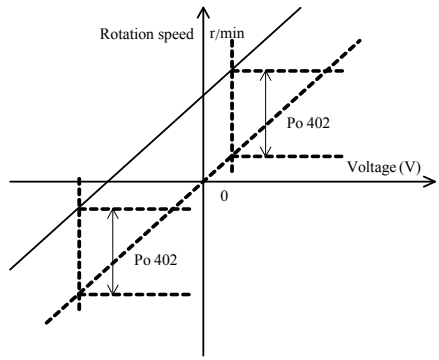

Po404	Analog speed command filter time constant			speed
	Setting range	Setting unit	Mfr‘s value	When enabled
	1~100	0.1ms	10	Effective Immediately

Adding first order filter to analog speed command makes speed command smoother, but if the setting value is too high, response speed will decrease.

6.4.2 Input signal

Signal name	Terminal	Remarks
AS1+	CN3-46	Differential speed command input
AS1–	CN3-47	
AGND	CN3-27	
The range of input voltage is from –10V to +10V.		

6.4.3 Soft start

The soft start function converts the stepwise speed reference inside the servodrive to a consistent rate of acceleration and deceleration.

（1）Setting parameters

Po109	Acceleration time			speed
	Setting range	Setting unit	Mfr‘s value	When enabled
	1~30000	ms	200	Effective Immediately

Po110	Deceleration time			speed
	Setting range	Setting unit	Mfr‘s value	When enabled
	1~30000	ms	200	Effective Immediately

（2）Instructions of acceleration/deceleration time

The acceleration/deceleration time means the time that speed increases from 0 to rated rotation speed or

decreases from rated speed to 0. Please refer to Fig 6-4-1.

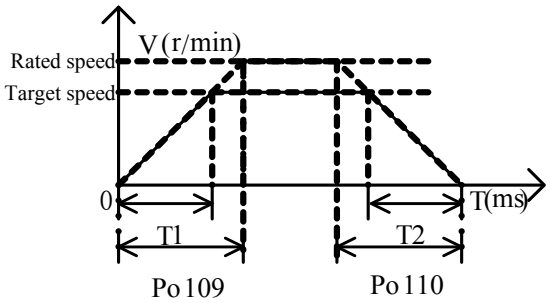

Fig 6-4-1 Soft start function

T1 and T2 are actual acceleration/deceleration time, the unit is ms.

Actual acceleration time T1=Po109×target speed/rated speed

Actual deceleration time T2=Po110×target speed/rated speed

6.4.4 S curve smoothness function

During the process of acceleration/deceleration, the rotation speed is unsteady. So add S curve acceleration/deceleration command into speed command to make rotation speed of motor more smooth.

(1) Setting parameters

Po111	S curve acceleration/deceleration time			Internal register speed mode
	Setting range	Setting unit	Mfr's value	When enabled
	0~15000	ms	100	Effective Immediately

Po112	S curve starting indication			Internal register speed mode
	Setting range	Setting unit	Mfr's value	When enabled
	0: Invalid 1: Valid	N/A	0	Effective Immediately

(2) Instruction of S curve smoothness function

Please refer to following figure about S curve function, and T1 and T2 are actual acceleration/deceleration time. (Please refer to soft start function)

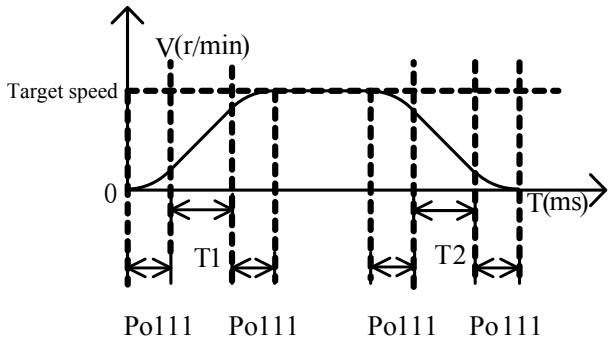

Fig 6-4-2 S curve smoothness function

6.4.5 Speed arrival signal output

When the absolute difference between actual rotation speed and command speed is lower than range of target speed (Po117), speed arrival signal is output. This function is not limited by motor rotation direction.

（1）Output signal

Signal name	Default terminals	Remarks
V-CMP	CN3-26 V-CMP+(in the speed mode) CN3-25 V-CMP-(in the speed mode)	Motor rotation speed is close to command speed.

（2）Setting parameter

Po117	Range of target speed			Speed
	Setting range	Setting unit	Mfr's value	When enabled
	0 ~ 30000	0.1r/min	300	Effective Immediately

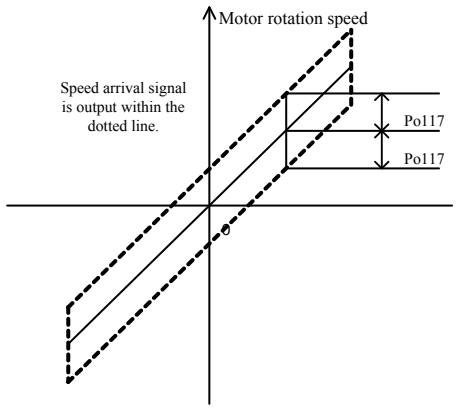

Fig 6-4-3 Speed arrival signal output

Note: solid line represents given speed, speed arrival signal is output within the dotted line.

6.4.6 Zero clamp function

When the zero clamp signal (ZCLAMP) is ON, servo enters into the locking status as soon as the absolute value of command speed drops below the motor speed level in the zero clamp level. The servo motor ignores the speed command and quickly stops and locks the servo motor.

(1) Input signal

Signal name	Default terminal	Remarks
ZCLAMP	CN3-37 (in the speed mode)	Servo motor enters into the locking status when the absolute value of command speed drops below the setting value in the zero clamp level.

(2) Setting parameters

Po127	Zero clamp enabled			Speed
	Setting range	Setting unit	Mfr's value	When enabled
	0: Zero clamp function OFF 1: Zero clamp function ON	0.1r/min	0	Effective Immediately

(3) Related parameters

Po126	Speed value in the zero clamp			Speed
	Setting range	Setting unit	Mfr's value	When enabled
	0 ~32000	0.1r/min	50	Effective Immediately

6.4.7 Encoder pulse frequency-division output

Encoder feedback pulses processed inside the servodrive can be output externally in the form of differential signal. The phase and frequency-division numbers can be set by related parameters.

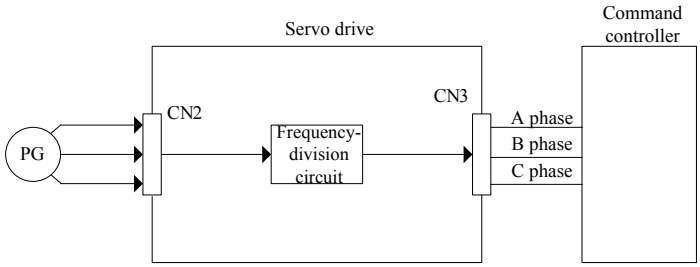

Fig 6-4-4 Encoder pulse frequency-division

（1）Output signal

Signal name		Terminal code	Remarks
PA phase	PAO-	CN3 – 17	Encoder A phase pulse frequency-division output
	PAO+	CN3 – 18	
PB phase	PBO-	CN3 – 15	Encoder B phase pulse frequency-division output
	PBO+	CN3 – 16	
PZ phase	PZO-	CN3 – 31	Encoder Z phase home pulse output (no frequency-division)
	PZO+	CN3 – 32	

(2) Setting parameters

Setting frequency-division numbers

Po003	Encoder frequency-division numbers speed position torque			
	Setting range	Setting unit	Mfr's value	When enabled
	0~128	N/A	0	Effective Immediately

When Po003=0, there is no frequency-division. The actual frequency-division numbers are double of setting value Po003. When Po003=128, it means each 256 pulse of encoder are output externally as a pulse. Encoder pulse frequency-division is not relevant to electronic gear.

Setting encoder pulse frequency-division output phase:

Parameter		Remarks
Po300	b 0□□□	CCW phase output
	b 1□□□	CW phase output

(3) Example: when Po003=1，2 frequency-divisions is shown in the following figure.

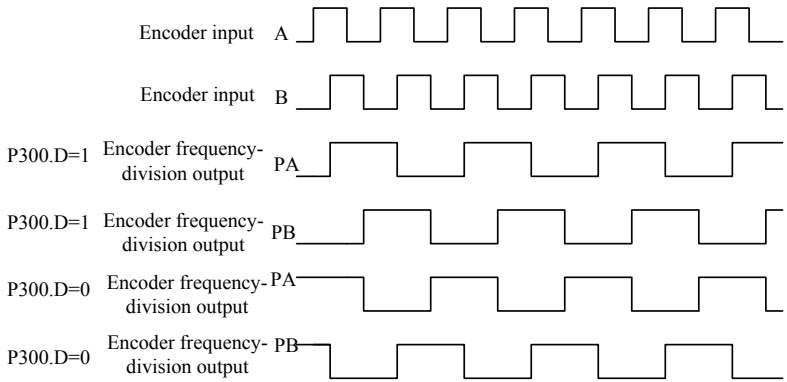

Fig 6-4-5 Encoder frequency-division output

6.5 Operating using position control

6.5.1 Setting parameters

(1) Control mode selection

Parameter		Remarks
Po001	d □ 1	Control mode selection: position pulse command mode

(2) Command pulse form selection

Parameter		Remarks
Po300	b □0□□	Pulse input logic is positive logic
	b □1□□	Pulse input logic is negative logic.

Modifying positive/negative logic will change motor rotation direction, please be carefully before modifying the value.

(3) Setting command pulse form

Parameter		Command pulse form	Forward rotation command	Reverse rotation command
Po300	b □□□0	Sign +pulse	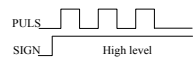	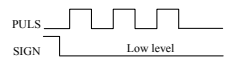
	b □□□1	CW pulse+CCW pulse	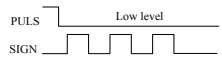	
	b □□□2	Two-phase pulse train with 90° phase differential (A phase, B phase)	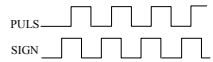	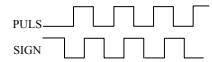

(4) Pulse command input

Signal name		Terminal	Remarks
PULS	PULS	CN3-44	5V power supply pulse command input
	/ PULS	CN3-43	
SIGN	SIGN	CN3-40	5V power supply pulse direction input
	/ SIGN	CN3-39	
PL1	PL1	CN3-48	24V power supply pulse direction input
	/ SIGN	CN3-39	
PL2	PL2	CN3-38	24V power supply pulse command input
	/ PULS	CN3-43	

6.5.2 Position pulse command

The servo motor positioning is controlled by inputting a pulse train command. The pulse train output form from the command controller corresponds to line-driver output and open-collector output. Please refer to 4.4.3 command pulse input interface.

Command pulse signal form	Command pulse signal	Command electrical standard
Sign+pulse	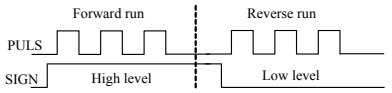	Differential output: 500KHz For open-collector output: 200KHz
CW pulse +CCW pulse	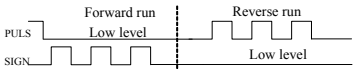	
Two-phase pulse train with 90° phase differential (A phase, B phase)	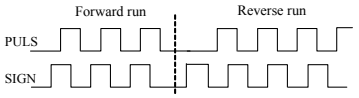	

6.5.3 Internal register position mode

In internal position command mode, 16 preset position commands can be set by parameters (Po310-Po325), and can be activated by use of input contacts SD0~SD2.

Preset positions are programmable and can be selected according to the table below:

Position command	SD2	SD1	SD0	Position command parameter		Speed parameter
1	0	0	0	Rotation numbers	Po310	Po330
				Pulse numbers	Po311	
2	0	0	1	Rotation numbers	Po312	Po331
				Pulse numbers	Po313	
3	0	1	0	Rotation numbers	Po314	Po332
				Pulse numbers	Po315	
4	0	1	1	Rotation numbers	Po316	Po333
				Pulse numbers	Po317	
5	1	0	0	Rotation numbers	Po318	Po334
				Pulse numbers	Po319	
6	1	0	1	Rotation numbers	Po320	Po335
				Pulse numbers	Po321	
7	1	1	0	Rotation numbers	Po322	Po336
				Pulse numbers	Po323	
8	1	1	1	Rotation numbers	Po324	Po337
				Pulse numbers	Po325	

Note: the default status of SD2, SD1 and SD0 is 000, 0 represents terminal open, 1represents terminal closed. Position command 1 given position=Po310 X (pulse numbers of one rotation)+Po311

1) Setting parameters

Parameters		Remarks
Po001	d □ 5	Control mode selection: internal register position mode

Po340	Trigger terminal filter time value			Torque
	Setting range	Setting unit	Mfr's value	When enabled
	0~10000	0.1ms	0	Effective Immediately

For internal positioning mode there are two types of moves incremental move or absolute move, selectable by parameter Po341 as below.

Parameter		Remarks
Po341	0	Incremental mode
	1	Absolute mode

Example below shows the difference between absolute and incremental moves.

For two pulse commands of 10 pulses position pulse command and followed with another 20 pulses, the travelled positions will be different.

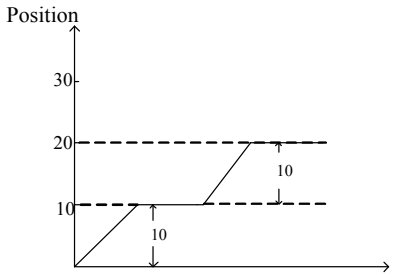

Absolute move

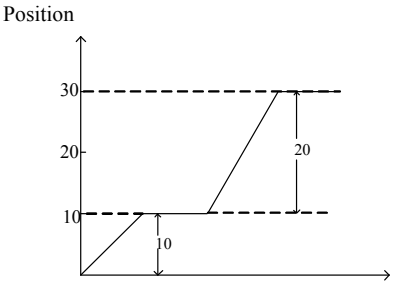

Incremental move

2) Internal position sequence diagram

Once any preset position is selected by input contacts SD0~SD2 then require a trigger signal from the input contact CTRG, enabled trigger signal to start operation.

Diagram below shows an example for absolute move.

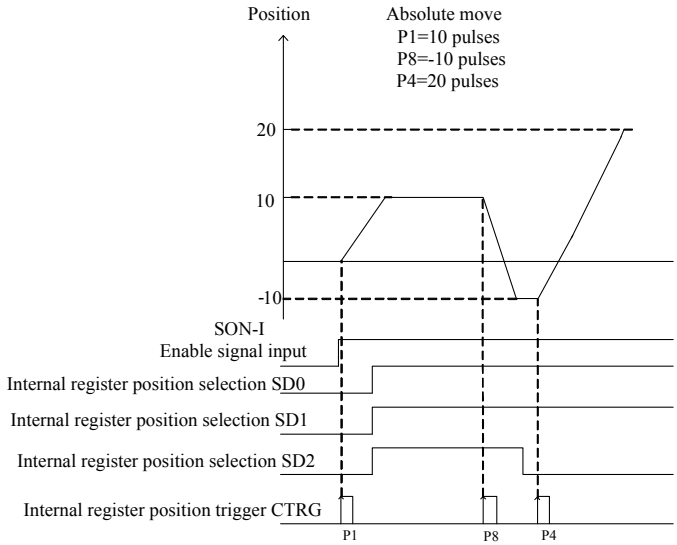

The Position command can be inhibited at any time by input contact signal HOLD.

Once HOLD is initiated the motor will decelerate and stop. As soon as the input contact CTRG is triggered again the original position command will be completed. Diagram below shows HOLD function with incremental move.

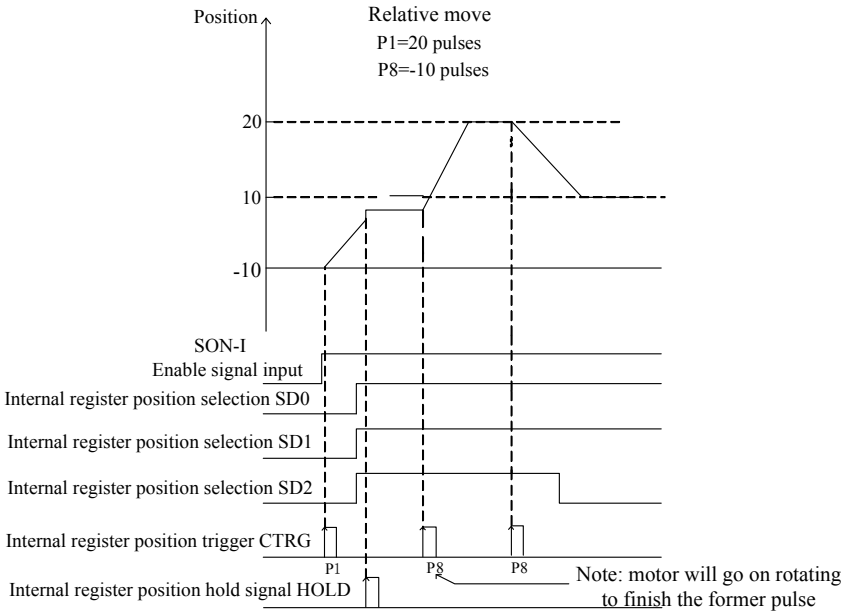

If the clear signal input is activated when a position command is in process then the motor will stop immediately and the remaining positioning pulses will be cleared. Once the CTRG input contact is activated again then a new position command will be started according to the selection of input contacts SD0~SD2 Diagram below shows clear function with incremental encoder.

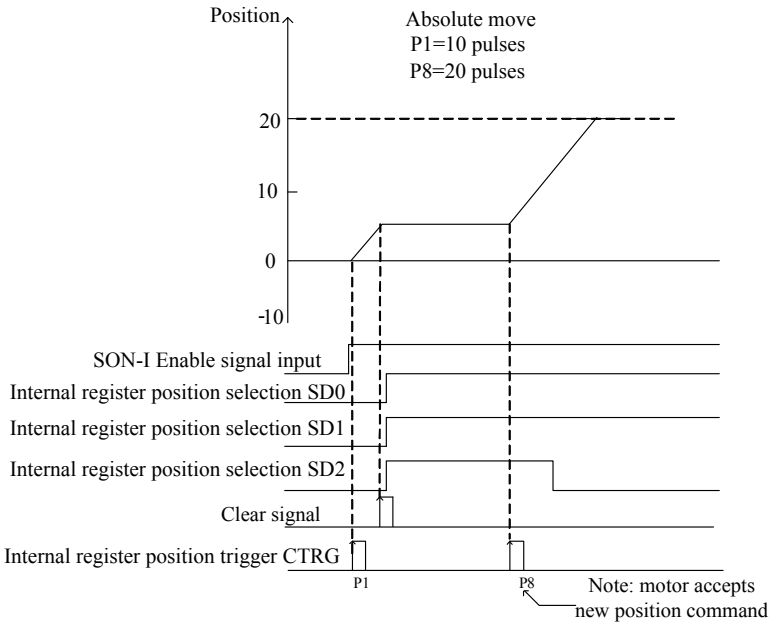

6.5.4 Setting electronic gear

Servodrive processes encoder signal by fourfold frequency. It needs 10000 pulses from servodrive to make a 2500 pulse/rev encoder rotate a rotation (When electronic gear is 1).

(1) Electronic gear

The electronic gear enables the workpiece travel distance per input command pulse from the command controller to be set to any value.

(2) Setting the related parameter

Po304	Electronic gear numerator			Position
	Setting range	Setting unit	Mfr‘s value	When enabled
	1~30000	N/A	1	After restart

Po305	Electronic gear denominator			Position
	Setting range	Setting unit	Mfr‘s value	When enabled
	1~30000	N/A	1	After restart

(3) Procedure for Setting the Electronic Gear Ratio

Step	Operation	Description
1	Check machine specifications.	Check the deceleration ratio, ball screw pitch, and pulley diameter.
2	Check the number of encoder pulses.	Check the number of encoder pulses for the servo motor used.
3	Determine the command unit used.	Determine the command unit from the command controller
4	Calculate the travel distance per load shaft rotation.	Calculate the number of command units necessary to turn the load shaft one rotation based on the previously determined command units.
5	Calculate the electronic gear ratio.	Use the electronic gear ratio equation to calculate the ratio
6	Set parameters.	Set parameters using the calculated values.

(4) Instruction

The deceleration ratio is n/m, electronic gear numerator is B, and electronic gear denominator is A, so the setting value of electronic gear ratio is:

Note: The deceleration ratio is n/m where m is the rotation of the servo motor and n is the rotation of the load shaft.

B/A=Po304/ Po305=(No. of encoder pulsees×4/travel distance per load shaft rotation)×（m/n）

The actual meaning of electronic gear is:

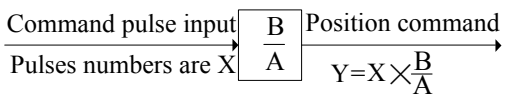

* If the ratio is outside the setting range, reduce the fraction (both numerator and denominator) until you obtain integers within the range. Be careful not to change the electronic gear ratio (B/A).

Electronic gear ratio setting range: 0.01 ≤ Electronic gear ratio (B/A) ≤ 100

If the electronic gear ratio is outside this range, the control precision will decrease.

Ex：The following example shows electronic gear ratio settings for ball screw which pitch is 6mm.

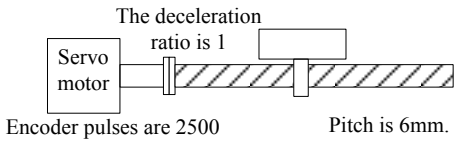

Fig 6-5-1 Setting electronic gear

Step	Operation	Calculation
1	Check machine specifications.	The deceleration ratio is 1:1 and the pitch is 6mm.
2	Check the number of encoder pulses.	2500 pulses/rev encoder
3	Determine the command unit used.	The command unit is 1μm.
4	Calculate the travel distance per load shaft rotation.	6000μm/1μm=6000
5	Calculate the electronic gear ratio.	B/A=(2500×4/6000) ×1/1
6	Set parameters.	Po304=10000 Po305=6000

(5) Position control block diagram

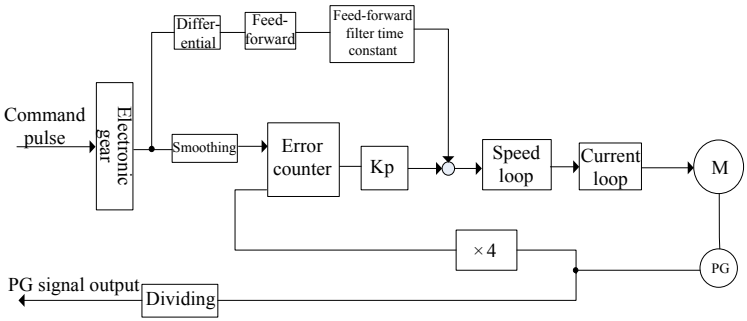

Fig 6-5-2 Position control block diagram

6.5.5 Home Search Mode

The home search mode is designed to perform positioning to the home pulse (phase-Z) position of the encoder and to clamp at the position. External detecting terminal ORGP or Z pulse are used as reference home, adopting forward searching or reverse searching method.

Note: 1 This mode is used when the motor shaft needs to be aligned to the machine.

2 Execute the home search after connecting the motor shaft with the machine.

3 Please make sure servo is in the enabled status when using this function.

1) Setting parameters

	Home search selection		speed position torque	
	Setting range	Setting unit	Mfr‘s value	When enabled
Po125	0: Not searching home 1: Automatically searching home after servo is powered on. 2: Searching home by I/O interface trigger	N/A	0	Effective Immediately

Parameter	Contents	Remarks
Po119= b□□□0	Reverse searching home.	Please refer to 6.5.5
Po119= b□□□1	Forward searching home.	Please refer to 6.5.5
Po119= b□□0□	Searching HOME by left/right limit position as the HOME position.	Please refer to 6.5.5
Po119= b□□1□	Searching HOME by using ORGP terminal as the HOME position.	Please refer to 6.5.5
Po119= b□□2□	Search for Z Phase pulse to be set as the HOME position.	Please refer to 6.5.5
Po119= b□0□□	After finding HOME position and decelerate to stop.	Please refer to 6.5.5
Po119= b□1□□	After finding HOME position, reverse direction in second speed to search for Z Phase pulse.	Please refer to 6.5.5
Po119= b□2□□	After finding HOME position, forward direction in second speed to search for Z Phase pulse.	Please refer to 6.5.5
Po119= b□3□□	After finding ORGP terminals, forward direction in second speed to search for the rising edge of ORGP to be as the HOME position	Please refer to 6.5.5
Po119= b0□□□	After finding Z phase pulse and decelerate to stop.	Please refer to 6.5.5
Po119= b1□□□	After finding Z phase pulse and return to Z phase pulse.	Please refer to 6.5.5

Po120	Home searching first speed			Position
	Setting range	Setting unit	Mfr‘s value	When enabled
	0~20000	0.1r /min	500	Effective Immediately

Po121	Home searching second speed			Position
	Setting range	Setting unit	Mfr‘s value	When enabled
	0~10000	0.1r /min	200	Effective Immediately

Po122	Home searching acceleration/deceleration time			Position
	Setting range	Setting unit	Mfr‘s value	When enabled
	0~1000	ms	0	Effective Immediately

Po123	Home searching offset (No. of revolutions)			Position
	Setting range	Setting unit	Mfr‘s value	When enabled
	-32000~+32000	N/A	0	Effective Immediately

Po124	Home searching bias pulse numbers			Position
	Setting range	Setting unit	Mfr's value	When enabled
	-32000~+32000	N/A	0	Effective Immediately

2）Home searching timing chart

1. Automatically searching home after servo is powered on. (Po125=1)

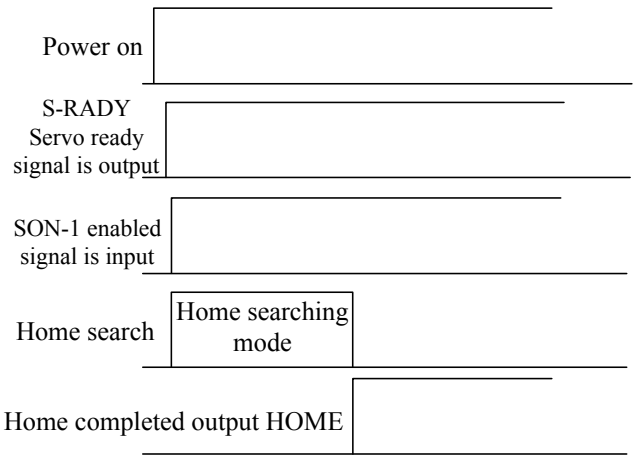

2. Timing chart after inputting SHOM (Po125=2)

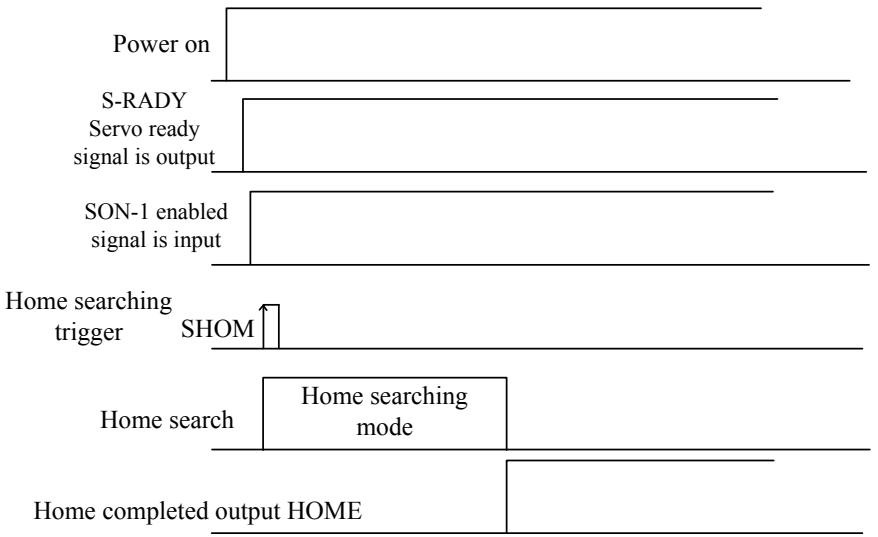

3）Home searching speed /position timing charts

1. Po119.A= b□□□1 (After starting Home searching, run forward in first speed for Home Reference)

Po119.C= b□1□□1(After finding Home Reference, reverse direction in second speed to search for the nearest Z Phase pulse to be set as the HOME position)

Po125.A= b□□□2 (Input SHOM to start home searching)

Po119.D= b1□□□ (Reverse search for HOME position)

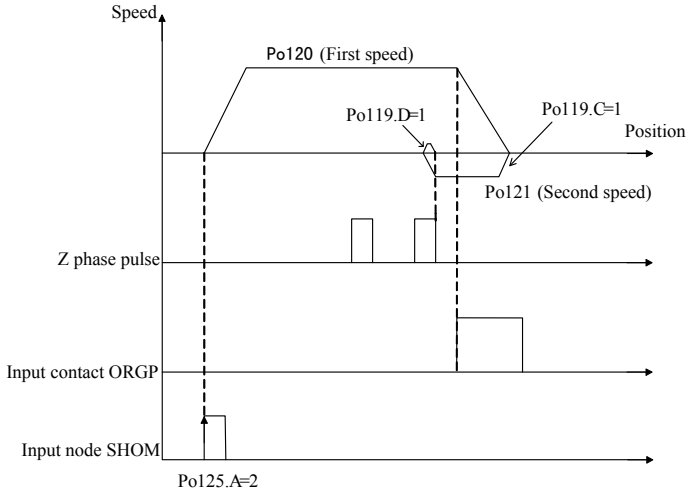

2. Po119.A= b□□□0 (After starting the Home searching, run reverse in first speed to search for HOME reference)

Po119.C= b□1□□(After finding HOME reference, reverse direction in second speed to search for the nearest Z Phase pulse to be set as the HOME position.)

Po125.A= b□□□2 (Input SHOM to start home searching)

Po119.D= b1□□□ (Reverse search for HOME position)

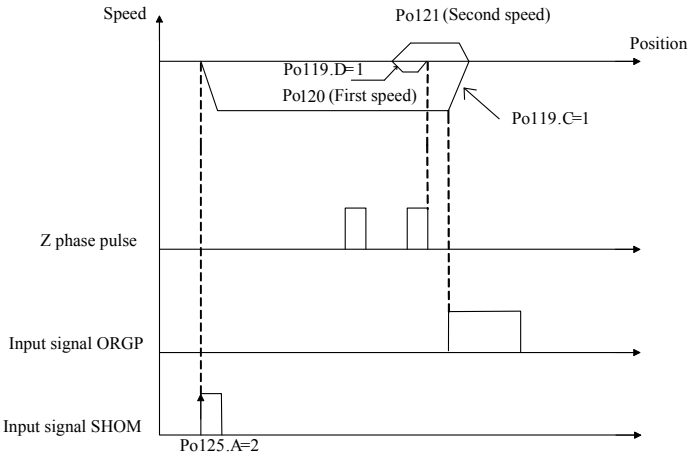

3. Po119.A= b□□□1 (After starting Home searching, run forward in first speed to search for HOME reference)

Po119.C= b□2□□ (After finding HOME reference, continues in the same direction in second speed to find

the nearest Z Phase to be set as the HOME position.)

Po125.A= b□□□2 (Input SHOM to start home searching)

Po119.D= b1□□□ (Reverse search for HOME position)

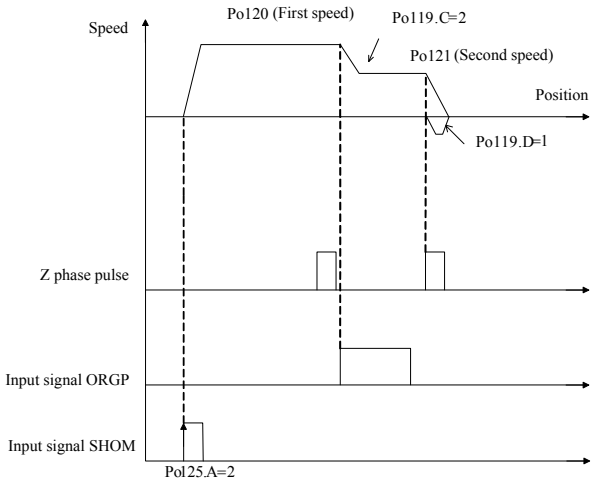

4. Po119.A= b□□□0 (After Starting HOME searching, run reverse in first speed to search for HOME reference)

Po119.C= b□2□□ (After finding HOME reference, continues in the same direction in second speed to find the nearest Z Phase to be set as the HOME position.)

Po125.A= b□□□2 (Input SHOM to start home searching)

Po119.D= b1□□□ (Reverse search for HOME position)

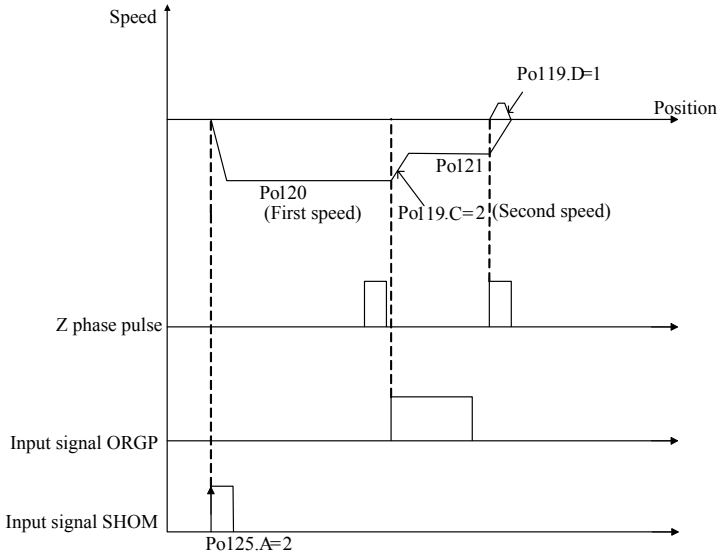

5. Po119.A= b□□□1 (After Starting HOME searching, run forward in first speed to search for HOME reference)

Po119.B= b□□2□ (After finding the Z phase pulse, set this position as the HOME position.)

Po125.A= b□□□2 (Input SHOM to start home searching)

Po119.D= b1□□□ (Reverse search for HOME position)

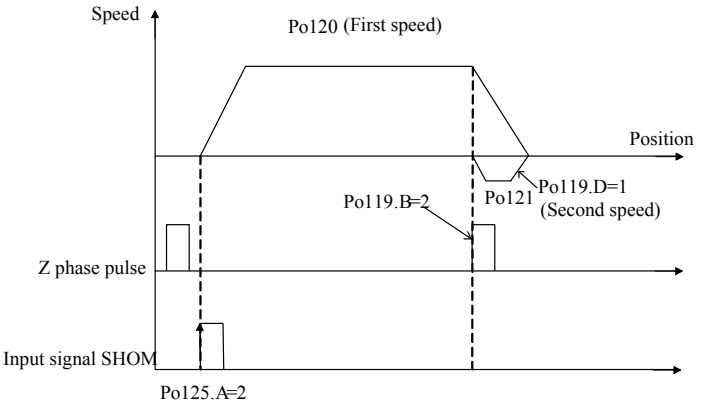

6. Po119.A= b□□□0 (After Starting HOME searching, run reverse in first speed to search for HOME reference)

Po119.B= b□□2□ (After Finding the Z phase pulse, set this position as the HOME position.)

Po125.A= b□□□2 (Input SHOM to start home searching)

Po119.D= b1□□□ (Reverse search for HOME position)

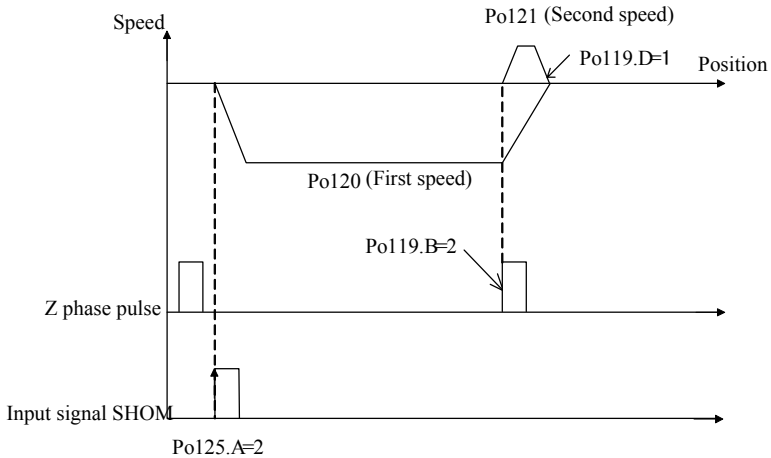

7. Po119.A= b□□□1(After Starting HOME searching, run forward in first speed to search for HOME reference)

Po119.C= b□3□□ (After Finding the HOME reference, the rising edge of ORGP sets the HOME position)

Po125.A= b□□□2 (Input SHOM to start home searching)

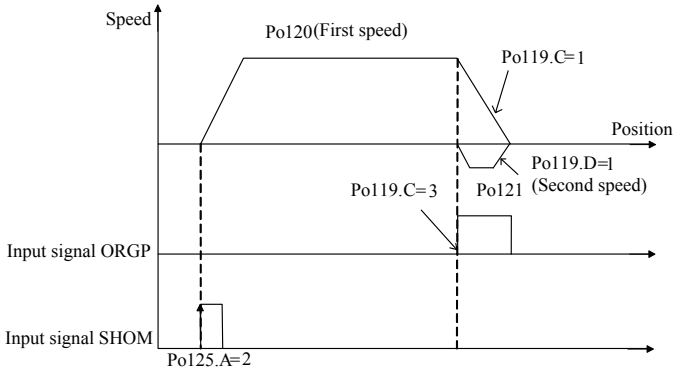

8. Po119.A= b□□□0 (After Starting HOME searching, run reverse in first speed to search for HOME reference)

Po119.C= b□3□□ (After Finding the HOME Reference, the rising edge of ORGP sets the HOME Position)

Po125.A= b□□□ (Input SHOM to start home searching)

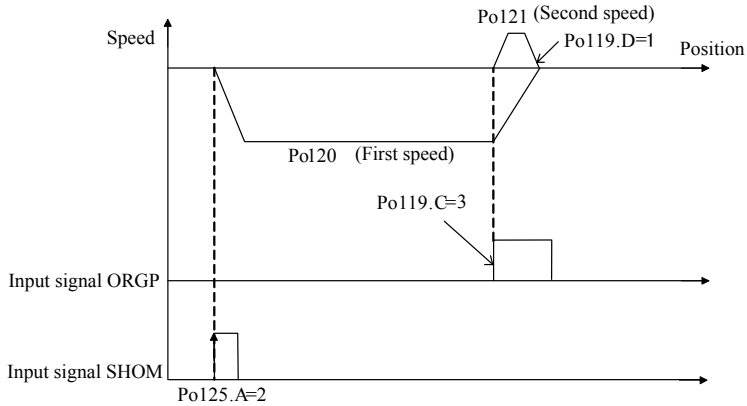

6.5.6 Command pulse inhibit function

This function inhibits the servodrive from counting input pulses during position control.

(1) Input signal

Signal name	Code	Default terminal	Remarks
Command pulse inhibit	INH-P	Must be allocated	Inhibiting the servodrive from counting input pulses, position pulse command is invalid.

(2) Setting parameters

Parameters		Remarks
Po308	b □□□0	Terminal of inhibiting command pulse is invalid.
	b □□□1	Terminal of inhibiting command pulse is valid.

6.5.7 Command pulse clear function

This function clears position deviation register during position control.

(1) Input signal

Signal name	Code	Default terminal	Remarks
Pulse clear	CLR	CN3-37 (in the mode of position pulse)	Clearing position deviation register during position control

(2) Setting parameters

Parameters		Remarks
Po308	b □□0□	Command pulse clear function is OFF.
	b □□1□	Command pulse clear function is ON.

6.5.8 Position arrival signal output function

When the remaining pulses numbers of error register are less than or equal to pulses numbers range of position arrival, position arrival signal is output. The parameter Po307 does not affect positioning precision.

(1) Input signal

Signal name	Code	Default terminal	Remarks

Position arrival	P-CMP	CN3-25 P-CMP- (in the mode of position pulse) CN3-26 P-CMP+ (in the mode of position pulse)	Positioning completed

(2) Setting parameters

Po307	Pulses numbers range of position arrival			Position
	Setting range	Setting unit	Mfr's value	When enabled
	1~32000	N/A	100	Effective Immediately

6.5.9 Position loop trace error pre-alarm output

This function supplies pre-alarm signal of big position error for PC/PLC.

(1) Input signal

Signal name	Default terminal	Remarks
PER-W	Must be allocated	Pre-alarm of big position error

(2) Setting parameters

Po303	Position error pre-alarm pulses numbers			Position
	Setting range	Setting unit	Mfr's value	When enabled
	1~32000	Please refer to Po308	10000	Effective Immediately

Parameter		Remarks
Po308	b 0□□□	Error pre-alarm unit is 1 pulse
	b 1□□□	Error pre-alarm unit is 100 pulses.

When the value of position error register is more than the value which equals to Po303 multiplied by error alarm unit, the pre-alarm signal is output.

6.5.10 Position loop trace error alarm output

Position loop trace error alarm is a malfunction. When the value of position error register is more than the value which equals to Po309 multiplied by error alarm unit, the alarm signal is output.

Po309	Position error alarm pulses numbers			Torque
	Setting range	Setting unit	Mfr's value	When enabled
	1~32000	Please refer to Po308	20000	Effective Immediately

Parameters		Remarks
Po308	b □0□□	Error alarm unit is 1 pulse
	b □1□□	Error alarm unit is 100 pulses.

6.5.11 Pulse input filter frequency

Filter frequency is used to inhibit high-frequency of disturbance pulses. Please do not set this value too low, avoid inhibiting effective high-frequency pulse command.

Parameters		Remarks
Po300	b □□0□	Pulse input filter frequency is 1MHz
	b □□1□	Pulse input filter frequency is 500kHz
	b □□2□	Pulse input filter frequency is 200kHz
	b □□3□	Pulse input filter frequency is 150kHz
	b □□4□	Pulse input filter frequency is 80kHz

6.5.12 Position loop filter time constant

Po306	Position loop filter time constant			Position
	Setting range	Setting unit	Mfr's value	When enabled
	1~2000	ms	1	Effective Immediately

Setting position loop filter time constant correctly can make motor rotate smoothly. The parameter does not affect pulse numbers. This function is suitable for the situations when the command controller can not accelerate or decelerate or the frequency of command pulse is too low or electronic gear is too high (more than 10 times).

6.6 Analog torque mode

6.6.1 Setting parameters

Parameters		Remarks
Po001	d □ 4	Control mode selection: analog torque mode.

Po401	Max torque corresponding to Analog torque Torque			
	Setting range	Setting unit	Mfr‘s value	When enabled
	1~800	1% of rated torque	100	Effective Immediately

Set the torque value when analog voltage is 10V. The slope equals to the ratio of 10V/setting value of Po401.

Please refer to the right figure about the mfr‘s setting:

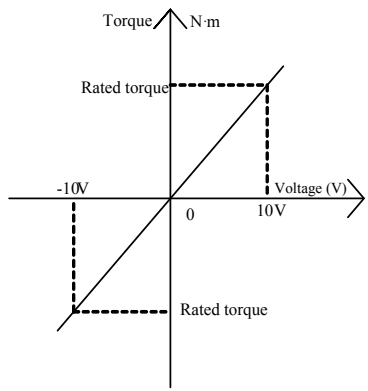

Po403	Analog torque command zero drift compensation Torque			
	Setting range	Setting unit	Mfr‘s value	When enabled
	0~±300	1% of rated torque	0	Effective Immediately

Analog torque command zero drift compensation is to eliminate analog torque command zero drift.

The setting method is as following:

（1）Short-connect AS2+ to AGND and AS2- to AGND.

（2）In the mode of analog torque, adjust Po403 to make Lo-13 to 0.

Please refer to right figure:

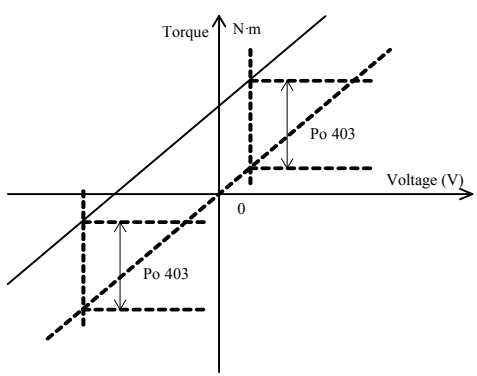

Po405	Analog torque command filter time constant			Torque
	Setting range	Setting unit	Mfr‘s value	When enabled
	1~100	0.1ms	10	Effective Immediately

This smoothens the speed command by applying a 1st-order filter to the analog speed command input. A value that is too large, however, will slow down response.

6.6.2 Torque command input

Signal name	Name	Terminals	Remarks
Analog torque command input	AS2+	CN3–34	Analog torque command input
	AS2-	CN3–35	
Grounding for analog	AGND	CN3–27 CN3–36	
Range of input voltage: -10V~ +10V			

6.6.3 Limiting Servo motor Speed during Torque Control

This function serves to limit the servo motor speed during torque control to protect the machine.

1. Internal speed limit 2. Analog speed limit 3. Speed limited by max rotation speed and actual motor max speed.

The third limit method is constantly enabled, and the rest of methods are limited by some conditions.

(1) Speed limit during torque control

Po210	Speed Limit During Torque Control			Torque
	Setting range	Setting unit	Mfr‘s value	When enabled
	0~2	N/A	2	Effective Immediately

Parameter	Remarks
Po210=0	Use the value set in Po211 as the speed limit.
Po210=1	Inputs an analog voltage command as the servo motor speed limit value, this is valid for forward/reverse rotation.
Po210=2	Use the lower value between max rotation speed Po002 and actual motor max rotation speed as the speed limit.

（2）Related parameter

Po211	Internal speed limit			Torque
	Setting range	Setting unit	Mfr‘s value	When enabled
	0~32000	0.1r/min	20000	Effective Immediately

6.7 Internal register speed mode operation

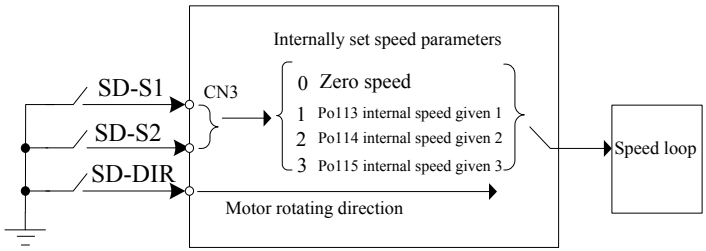

Fig 6-7-1 Internal register speed mode

This function allows speed control operation by externally selecting an input signal from among three servo motor speed (Po113，Po114，Po115) settings made in advance with parameters in the Servo drive.

Step	Contents	Remarks
1	Po001=d □ 0，internal register speed mode	Please refer to 6.2
2	Set the speed to Po113，Po114，Po115	Please refer to 6.7.1
3	Set external terminal function	Please refer to how to set terminal function
4	Get 7 speed values by combination of external terminals	

6.7.1 Setting parameters

Parameter		Remarks
Po001	d □ 0	Control mode selection: internal register speed mode

Po113	Internal speed given 1			Speed
	Setting range	Setting unit	Mfr‘s value	When enabled
	0~±32000	0.1r/min	1000	Effective Immediately

Po114	Internal speed given 2			Speed
	Setting range	Setting unit	Mfr‘s value	When enabled
	0~±32000	0.1r/min	2000	Effective Immediately

Po115	Internal speed given 3			Speed
	Setting range	Setting unit	Mfr‘s value	When enabled
	0~±32000	0.1r/min	3000	Effective Immediately

Note: The maximum speed of servo motor is used whenever speed settings for the Po113 to Po115 exceed the maximum speed.

6.7.2 Setting input signal

The following input signals are used to switch the operating speed.

Signal name	Name	Default terminals	Remarks
Internal speed selection 1	SD-S1	CN3-11 (Internal register speed mode)	Internal speed selection
Internal speed selection 2	SD-S2	CN3-37 (Internal register speed mode)	
Internal direction control	SD-DIR	CN3-10 (Internal register speed mode)	Internal direction control

6.7.3 Operating Using an Internally Set Speed

Input Signal			Motor Rotation Direction	Speed
SD-DIR	SD-S1	SD-S2		
OFF	OFF	OFF	Forward	0: zero
	OFF	ON		Po113 ： Internal speed given 1
	ON	OFF		Po114 ： Internal speed given 2
	ON	ON		Po115 ： Internal speed given 3
ON	OFF	OFF	Reverse	0: zero
	OFF	ON		Po113 ： Internal speed given 1
	ON	OFF		Po114 ： Internal speed given 2
	ON	ON		Po115 ： Internal speed given 3

Note: terminal valid=ON status, terminal invalid=OFF status.

6.8 Operation of internal register in torque mode

Parameter		Remarks
Po001	d □ 2	Control mode selection: internal register torque mode

Po204	Internal given torque			Internal register torque
	Setting range	Setting unit	Mfr‘s value	When enabled
	0~±800	1% of rated torque	10	Effective Immediately

⚠ Note: as soon as servo is enabled in internal register torque mode, servo will start running immediately. Please be careful!

6.9 Limiting Torque

The servodrive provides the following three methods for limiting output torque to protect the machine.

1. Internal max torque limit 2. Torque limiting by internal register controlled by terminals 3.Torque limiting by analog.

Internal max torque limit is constantly enabled, and the rest of methods are limited by some conditions. When three methods are all valid, the actual torque limit value is the smallest value of them.

6.9.1 Internal max torque limit

The setting of Po202 is constantly enabled. If the torque limit is set higher than the maximum torque of the servo motor, the maximum torque of the servo motor is used.

Po202	Internal max torque limit value			speed position torque
	Setting range	Setting unit	Mfr‘s value	When enabled
	0~800	1% of rated torque	300	Effective Immediately

Too small a torque limit setting will result in insufficient torque during acceleration and deceleration.

6.9.2 Torque limiting controlled by terminals

Signal name	Name	Default terminal	Remarks
Forward torque limit	F-CL	CN3-10	Motor forward torque limit.
Reverse torque limit	R-CL	CN3-11	Motor reverse torque limit.

When using forward torque limit function, please set the function of a programmable terminal to forward torque limit (F-CL). When using reverse torque limit function, please set the function of a programmable terminal to reverse torque limit(R-CL).

Po208	Forward max torque limit			speed position torque
	Setting range	Setting unit	Mfr‘s value	When enabled
	0~800	1% of rated torque	100	Effective Immediately

Po209	Reverse max torque limit			speed position torque
	Setting range	Setting unit	Mfr‘s value	When enabled
	0~800	1% of torque	100	Effective Immediately

When the signal F-CL is valid, forward max torque limit value should be lower than Po208.

When the signal F-CL is valid, reverse max torque limit value should be lower than Po209.

Note: Too small a torque limit setting of Po208 and Po209 will result in insufficient torque during acceleration and deceleration.

6.9.3 Torque limiting by analog

Torque limiting by analog is that torque is limited by the input voltage of analog torque terminal. Please refer to Po401 about the relationship between analog voltage and torque limiting value.

Po203	Torque limiting by analog			speed position torque
	Setting range	Setting unit	Mfr's value	When enabled
	0~1	N/A	0	Effective Immediately

When Po203=0, torque limiting by analog is invalid, when Po203=1, torque limiting by analog is valid.

There is no polarity in the input voltage of the analog voltage for torque limiting. The absolute values of both + and - voltages are input, and a torque limit value corresponding to that absolute value is applied in the forward or reverse direction.

6.10 Other Output Signals

6.10.1 Servo Alarm Output and Alarm Code Output

(1) Servo Alarm Output

This signal is output when an error is detected in the servodrive. ON signal is output when servo works well, OFF signal is output when there is a malfunction.

Signal name	Name	Terminals	Remarks
Servo Alarm Output	ALM	CN3-19 ALM- CN3-20 ALM+	Servo alarm output signal

(2) Alarm Code Output

Signal name	Terminals	Remarks
ALO	CN3-14 ALO1	Alarm Code Output
	CN3-13 ALO2	
	CN3-12 ALO3	
CM	CN3-49 CN3-50	Alarm Code Output

These open-collector signals output alarm codes. The ON/OFF combinations of these output signals get 7 kinds of alarm signal. Please refer to 8.1.2.

(3) Alarm Reset

When a servo alarm (ALM) has occurred, the alarm can be reset by giving a pulse to alarm reset terminal.

Signal name	Name	Default terminal	Remarks
Alarm Reset	AL-RST	CN3-7	Alarm Reset

The alarm can also be reset from the keypad panel, please refer to 5.1.

⚠ **Note: before resetting an ALM signal, please make sure the servo is powered off.**

6.10.2 Servo ready output

Signal name	Default terminal	Remarks
SRDY	CN3-22 SRDY+	Servo ready output
	CN3-21 SRDY-	

This signal indicates that the servodrive received the servo ON signal and completed all preparations. It is output when there are no servo alarms and the control circuit and main circuit power supply is turned ON. Servo OFF means servo is not ready.

6.10.3 Overload pre-alarm signal output

When servo output current reaches or exceeds overload pre-alarm current, and after overload pre-alarm filter time, the output current is still higher than pre-alarm current, then this signal is output.

Signal name	Default terminal	Remarks
OL-W	Allocated by users	Pre-alarm signal of overload

The related parameters:

So-35	Overload pre-alarm current speed position torque			
	Setting range	Setting unit	Mfr's value	When enabled
	0~800	%	120	Effective Immediately

So-36	Overload pre-alarm filter time speed position torque			
	Setting range	Setting unit	Mfr's value	When enabled
	0~1000	10ms	10	Effective Immediately

6.10.4 Rotation detection

This signal is output to indicate that the servo motor is currently operating above the setting in parameter Po118.

（1） Setting output signal

Signal name	Default terminal	Remarks
TGON	CN3-23 DO2- CN3-24 DO2+	When the absolute value of speed is higher than the value of Po118, TGON signal is output.

（2）Setting related parameters

Po118	Rotation detection value Speed			
	Setting range	Setting unit	Mfr's value	When enabled
	0 ~30000	0.1r/min	300	Effective Immediately

6.11 Sequence control

(1) While connecting the power supply

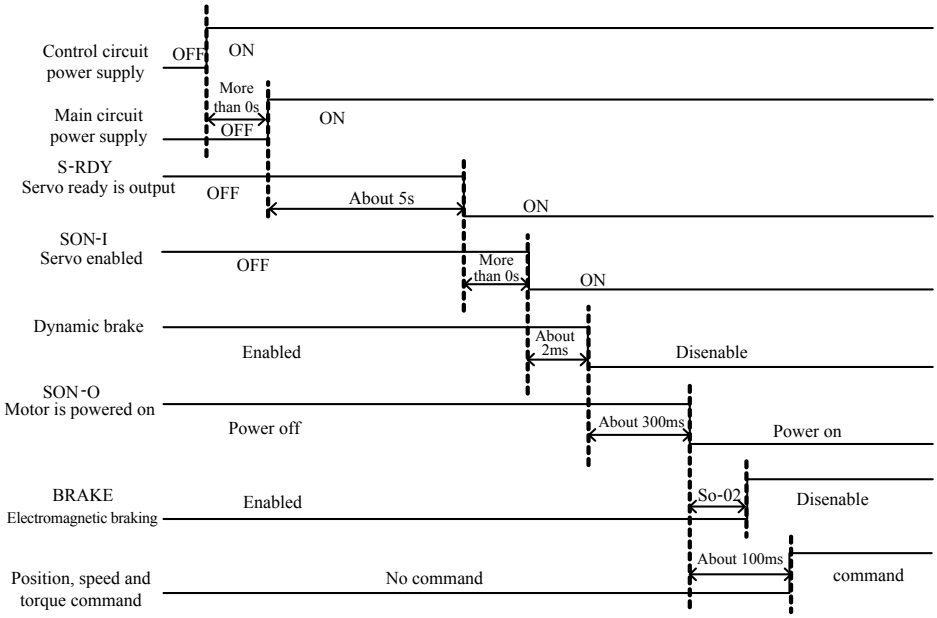

Fig 6-11-1 Sequence control after connecting the power supply

Note: 1 Servo ready signal is output after main circuit is powered on and no fault is output.

2 Before servo ready signal is output, all control signal of servodrive is ignored.

3 When servo enabled signal is found, please send control command after 100ms, or else the command will be ignored.

(2) Sequence control after alarm activated

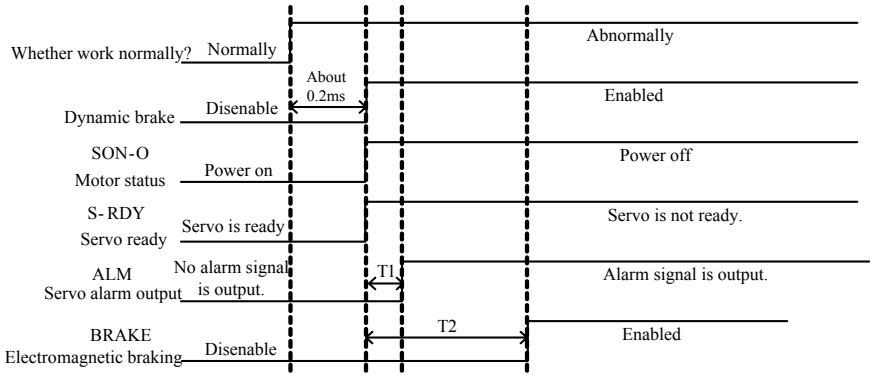

Fig 6-11-2 Sequence control of servo alarm activated

Note：1 T1 is 0.1ms~20ms according different alarm type.

2 T2 is the lower value of So-03 and the time when speed arrives to 30r/min.

(3) Sequence control after resetting servodrive

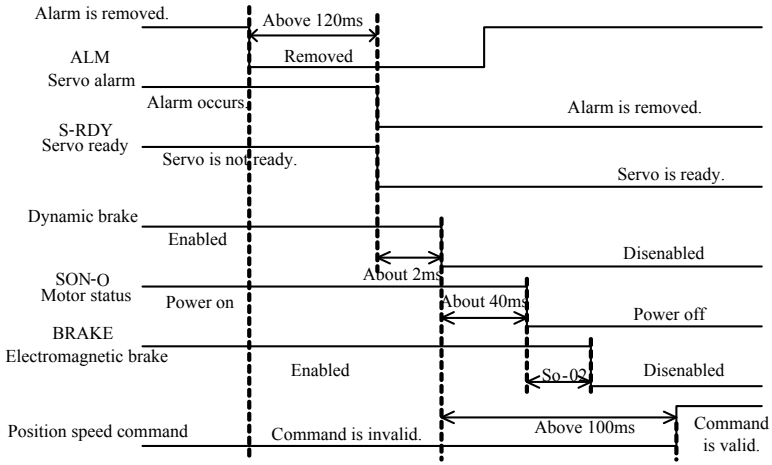

Fig 6-11-3 sequence control after resetting servodrive

VII. List of parameters

No.	Group name	Group shorten name	Function code range	Descriptions
1	Monitor function group	L group	Lo-00~Lo-99	Monitor servo present status.
2	Utility function group	S group	So-00~So-49	Set the utility function.
3	Main function group	P group	Po000~Po049	Parameters related to system.
			Po100~Po149	Parameters related to speed loop.
			Po200~Po249	Parameters related to torque loop.
			Po300~Po349	Parameters related to position loop.
			Po400~Po449	Parameters related to terminals.
			Po500~Po549	Parameters related to communication.

Instruction for parameters list:

(1) Instruction of parameter name

When the parameter is ―reserved", please do not set this kind of parameters.

(2) Instruction of parameter units

The units of function selection parameters are N/A, they are no units.

(3) Instruction of control mode

The scopes of parameters are all servo running modes.

(4) Instruction of Mfr's value

The Mfr's value of parameter is ——", it indicates that this parameter is related to the characteristic of matching servo motor. If servo motors are different, the parameters are different.

(5) Instruction of modifying mode

★ indicates that function code can only be checked, but not be modified.

○ indicates that the setting value can not be saved after servo restarts.

● indicates that after changing these parameters, turn OFF the main circuit and control power supplies and then turn them ON again to enable the new settings.

■ indicates that after the parameter is set, the function of this parameter is effective immediately.

□ indicates that the parameter can be updated real time, it is convenient to adjust the parameter.

The user must enter correct user's password if you intend to change parameters. Otherwise, parameters can not be modified, and Err will be displayed.

7.1 Monitor function group（Lo-□□）

The monitor mode can be used for monitoring the command value and servodrive internal status.

Parameter	Display content	Unit	Remark
Lo-00	Servodrive output current	0.1A	
Lo-01	Servodrive bus voltage	V	
Lo-02	Servo motor rotation speed	0.1r/min	
Lo-03	Servo motor feedback pulse displays high 5 digits.	Command unit	
Lo-04	Servo motor feedback pulse displays low 5 digits	Command unit	
Lo-05	Servo motor feedback rotation displays high 5 digits	Command unit	
Lo-06	Servo motor feedback rotation displays low 5 digits	Command unit	
Lo-07	Given command pulse numbers display high 5 digits	Command unit	Valid in position pulse mode.
Lo-08	Given command pulse numbers display low 5 digits	Command unit	Valid in position pulse mode.
Lo-09	command pulse error numbers	Command unit	Valid in position pulse mode.
Lo-10	Given speed	0.1r/min	Valid in speed mode.
Lo-11	Given torque	1% of rated torque	Valid in torque mode.
Lo-12	Analog speed command display	0.1r/min	Valid in analog speed mode.
Lo-13	Analog torque command display	1% of rated torque	Valid in analog torque mode.
Lo-14	DI8~DI5 status display	None	Please refer to 4.5.5
Lo-15	DI4~DI1 status display	None	Please refer to 4.5.5
Lo-16	The other output interface status display.	None	Please refer to 4.5.5
Lo-17	DO4~DO1 status display	None	Please refer to 4.5.5

Note: This group of parameters can only be checked, not be set.

7.2 Utility function group (So-□□)

The utility mode can set user‘s password, display software version, set braking parameters and Jog run.

Parameter	Name	Setting range	Setting unit	Control mode	Mfr‘s value	Setting mode	Reference chapter
So-00	Software version	Can‘t be set	N/A	ALL	Constant	★	—
So-01	User‘s password	0~9999	N/A	ALL	0	●	**6.3.1**
So-02	Delay time after electro-magnetic braking starts	0~30000	10ms	ALL	10	■	**6.3.7**
So-03	Delay time after electro-magnetic braking stops	5~30000	10ms	ALL	100	■	**6.3.7**
So-04	Braking resistor value	20~1000	Ω	ALL	—	■	**6.3.7**
So-05	Discharge duty ratio	1~100	%	ALL	50	■	**6.3.7**
So-06	Reserved						
So-07	Servo OFF stop mode	0~1	N/A	ALL	0	■	**6.3.7**
So-08	Dynamic braking delay time	100~30000	0.1ms	ALL	5000	■	**6.3.7**
So-09	Servo drive status display	0~15	N/A	ALL	0	■	**6.3.2**
So-10	Record of the latest malfunction type	0~22	N/A	ALL	0	★	**8.1.1**
So-11	Record of malfunction type for last but one	0~22	N/A	ALL	0	★	
So-12	Record of malfunction type for two but one	0~22	N/A	ALL	0	★	
So-13	JOG speed	0~30000	0.1r/min	ALL	1000	■	
So-14	JOG run	Can‘t be set	N/A	ALL	—	■	**6.1.1**
So-15	Encoder disconnect protection	0~1	N/A	ALL	0	■	**6.3.8**
So-16	Reserved						

Note: ★ indicates that function code can only be checked, but not be modified.

○ indicates that the setting value can not be saved after servo restarts.

● indicates that after changing these parameters, turn OFF the main circuit and control power supplies and then turn them ON again to enable the new settings.

■ indicates that after the parameter is set, the function of this parameter is effective immediately.

□ indicates that the parameter can be updated real time, it is convenient to adjust the parameter.

Parameter	Name	Setting range	Setting unit	Control mode	Mfr's value	Setting mode	Reference chapter
So-17	Forward run prohibited	0~1	N/A	ALL	1	■	**6.3.6**
	0: Prohibited invalid 1: Prohibited valid						
So-18	Reverse run prohibited	0~1	N/A	ALL	1	■	**6.3.6**
	0: Prohibited invalid 1: Prohibited valid						
So-19	Analog monitor function selection	0~2	N/A	ALL	0	■	**6.3.8**
	0: Servo drive output current 1: Servo drive bus voltage 2: Servo drive motor rotation speed						
So-20	Output current corresponding to 10V	1~1000	0.1A	ALL	200	■	**6.3.8**
So-21	Max voltage corresponding to 10V	1~500	V	ALL	500	■	**6.3.8**
So-22	Max rotation speed corresponding to 10V	1~32000	0.1r/min	ALL	30000	■	**6.3.8**
So-23	Reserved						
So-24	Analog monitor voltage compensation	0~±1000	N/A	ALL	0	□	**6.3.8**
So-25	Reserved						
So-26	Reserved						
So-27	Alarm No. corresponding to alarm code 001	1~15	N/A	ALL	1	●	**8.1.2**
So-28	Alarm No. corresponding to alarm code 010	1~15	N/A	ALL	2	●	**8.1.2**
So-29	Alarm No. corresponding to alarm code 011	1~15	N/A	ALL	3	●	**8.1.2**
So-30	Alarm No. corresponding to alarm code 100	1~15	N/A	ALL	6	●	**8.1.2**
So-31	Alarm No. corresponding to alarm code 101	1~15	N/A	ALL	9	●	**8.1.2**

Note: ★ indicates that function code can only be checked, but not be modified.

○ indicates that the setting value can not be saved after servo restarts.

● indicates that after changing these parameters, turn OFF the main circuit and control power supplies and then turn them ON again to enable the new settings.

■ indicates that after the parameter is set, the function of this parameter is effective immediately.

□ indicates that the parameter can be updated real time; it is convenient to adjust the parameter.

Parameter	Name	Setting range	Setting unit	Control mode	Mfr's value	Setting mode	Reference chapter
So-32	Alarm No. corresponding to alarm code 110	1~15	N/A	ALL	11	●	**8.1.2**
So-33	Alarm No. corresponding to alarm code 111	1~15	N/A	ALL	12	●	**8.1.2**
So-34	Reserved						
So-35	Overload pre-alarm current	0~800	%	ALL	120	■	**6.10.3**
So-36	Overload pre-alarm filter time	0~1000	10ms	ALL	10	■	**6.10.3**
So-37 ~ So-48	Reserved						
So-49	Revert to mfr's value	0~1	N/A	ALL	0	●	**6.3.3**

Note: ★ indicates that function code can only be checked, but not be modified.

○ indicates that the setting value can not be saved after servo restarts.

● indicates that after changing these parameters, turn OFF the main circuit and control power supplies and then turn them ON again to enable the new settings.

■ indicates that after the parameter is set, the function of this parameter is effective immediately.

□ indicates that the parameter can be updated real time, it is convenient to adjust the parameter.

7.3 Main function group（Po□□□）

Parameter	Name	Setting range	Setting unit	Control mode	Mfr's value	Setting mode	Reference chapter
Po000	Reserved						
Po001	Control mode and forward direction setting	Two-parameter	N/A	ALL	1 0	●	—
	d □ □ □ □						
	X: Control mode setting 0: Internal register speed mode 1: Position pulse mode 2: Internal register torque mode 3: Analog speed mode 4: Analog torque mode 5: Internal register position mode						
	Y: Motor forward direction setting 0: Clockwise as viewed from the servo motor shaft 1: Counterclockwise as viewed from the servo motor shaft						
Po002	Max rotation speed (Absolute value)	0~6000	r/min	ALL	—	■	—
Po003	Encoder frequency-division numbers	0~128	N/A	ALL	0	■	**6.4.7**
Po004	Servo enabled mode selection	0~1	N/A	ALL	0	●	**6.3.4**
	0: External terminal enabled 1: Internal terminal enabled						
Po005 ~ Po009	Reserved						
Po010	Rigid setting	1~16	N/A	P, S	—	■	**9.1.4**
Po011 ~ Po049							

Note: ★ indicates that function code can only be checked, but not be modified.

○ indicates that the setting value can not be saved after servo restarts.

● indicates that after changing these parameters, turn OFF the main circuit and control power supplies and then turn them ON again to enable the new settings.

■ indicates that after the parameter is set, the function of this parameter is effective immediately.

□ indicates that the parameter can be updated real time, it is convenient to adjust the parameter.

Parameter	Name	Setting range	Setting unit	Control mode	Mfr's value	Setting mode	Reference chapter
Po100	Internal enabled setting	0~1	N/A	ALL	0	■○	**6.3.4**
Po101	Speed loop proportion gain 1	100~30000	N/A	P、S	—	■	**9.1.2**
Po102	Speed loop integral gain 1	0~10000	N/A	P、S	—	■	**9.1.2**
Po103	Speed loop proportion gain 2	100~30000	N/A	P、S	100	■	**9.1.2**
Po104	Speed loop integral gain 2	0~10000	N/A	P、S	100	■	**9.1.2**
Po105	Speed loop feedforward gain	0~100	N/A	P、S	0	■	**9.1.2**
Po106	Filter time constant of detecting speed	1~100	0.1ms	P、S	4	■	—
Po107	Reserved						
Po108	Reserved						
Po109	Acceleration time (only valid in speed mode)	1~30000	ms	S	200	■	**6.4.3**
Po110	Deceleration time (only valid in speed mode)	1~30000	ms	S	200	■	**6.4.3**
Po111	S curve acceleration/deceleration time	1~15000	ms	Sr	100	■	**6.4.4**
Po112	S curve starting indication	0~1	N/A	Sr	0	■	**6.4.4**
Po113	Internal speed given 1	0~±32000	0.1r/min	Sr	1000	■	**6.8.1**
Po114	Internal speed given 2	0~±32000	0.1r/min	Sr	2000	■	**6.7.1**
Po115	Internal speed given 3	0~±32000	0.1r/min	Sr	3000	■	**6.7.1**
Po117	Range of target speed	0~30000	0.1r/min	S	300	■	**6.4.5**
Po118	Rotation detection value	0~30000	0.1r/min	S	300	■	**6.10.4**
Po119	Home position searching	0~2	N/A	Pt,Pr	0	■	**6.5.5**
Po120	Home searching first speed	0~20000	0.1r/min	Pt,Pr	500	■	**6.5.5**
Po121	Home searching second speed	0~10000	0.1r/min	Pt,Pr	200	■	**6.5.5**
Po122	Home searching acceleration/deceleration time	0~1000	ms	Pt,Pr	0	■	**6.5.5**
Po123	Home searching offset (No. of revolutions)	-32000~+32000	N/A	Pt,Pr	0	■	**6.5.5**
Po124	Home searching bias pulse numbers	-32000~+3	N/A	Pt,Pr	0	■	**6.5.5**
Po125	Home search selection	0~2	N/A	Pt,Pr	0	■	**6.5.5**
Po126	Speed value in the zero clamp	0~32000	0.1r/min	S	50	■	**6.4.6**
Po127	Zero clamp enabled	0~1	N/A	S	0	■	**6.4.6**
Po128	Reserved						
Po129	Reserved						
Po130	Gain switchover settting	0~3	N/A	P,S	0	■	**9.1.3**
Po131	Gain switchover speed	1~32000	0.1r/min	P,S	100	■	**9.1.3**
Po132	Gain switchover pulse	1~32000	N/A	P,S	100	■	**9.1.3**
Po133	Gain smooth switchover time	1~32000	0.1ms	P,S	20	■	**9.1.3**
Po134	Position loop proportion gain 2	50~20000	N/A	P	1000	■	**9.1.2**
Po135	Gain switchover delay time	1~32000	0.1ms	P,S	1000	■	**9.1.3**

Parameter	Name	Setting range	Setting unit	Control mode	Mfr's value	Setting mode	Reference chapter
Po200	Reserved						
Po201	Reserved						
Po202	Internal max torque limit value	0~800	1% of rated torque	ALL	300	■	**6.9.1**
Po203	Torque limiting by analog	0~1	N/A	ALL	0	■	**6.9.3**
Po204	Internal given torque	0~±800	1% of rated torque	Tr	10	■	**6.8**
Po205	Reserved						
Po206	Reserved						
Po207	Forward/reverse run prohibited and emergency stop torque	1~300	1% of rated torque	ALL	100	■	**6.3.6**
Po208	Forward max torque limit	0~800	1% of rated torque	ALL	100	■	**6.9.2**
Po209	Reverse max torque limit	0~800	1% of rated torque	ALL	100	■	**6.9.2**
Po210	Speed limit during torque control	0~2	N/A	T	2	■	**6.6.3**
Po211	Internal speed limit	0~32000	0.1r/min	T	20000	■	**6.6.3**
Po212 ~ Po249	Reserved						

Note: ★ indicates that function code can only be checked, but not be modified.
○ indicates that the setting value can not be saved after servo restarts.
● indicates that after changing these parameters, turn OFF the main circuit and control power supplies and then turn them ON again to enable the new settings.
■ indicates that after the parameter is set, the function of this parameter is effective immediately.
□ indicates that the parameter can be updated real time, it is convenient to adjust the parameter.

Parameter	Name	Setting range	Setting unit	Control mode	Mfr's value	Setting mode	Reference chapter
Po300	Pulse command setting	Four-parameter	N/A	ALL	1000	■	—

b □ □ □ □

A	Pulse mode
0	Pulse+direction
1	Pulse+pulse
2	orthogonal(fourfold frequency)

B	Filter frequency by pulse input
0	1 MHz
1	500KHz
2	200KHz
3	150KHz
4	80KHz

C	Pulse input logic
0	Negative logic
1	Positive logic

D	Frequency-division phase output
0	Negative phase output
1	Positive phase output

Po301	Position loop proportion gain	50~10000	N/A	Pt,Pr	—	■	**9.1.2**
Po302	Position loop feedforward gain	0~100	N/A	Pt,Pr	—	■	**9.1.2**
Po303	Position error alarm pulses numbers	1~32000	Command unit	Pt Pr	1000 0	■	**6.5.8**
Po304	Electronic gear numerator	1~30000	N/A	Pt Pr	1	●	**6.5.4**
Po305	Electronic gear denominator	1~30000	N/A	Pt Pr	1	●	**6.5.4**

Note: ★ indicates that function code can only be checked, but not be modified.
○ indicates that the setting value can not be saved after servo restarts.
● indicates that after changing these parameters, turn OFF the main circuit and control power supplies and then turn them ON again to enable the new settings.
■ indicates that after the parameter is set, the function of this parameter is effective immediately.
□ indicates that the parameter can be updated real time, it is convenient to adjust the parameter.

Parameter	Name	Setting range	Setting unit	Control mode	Mfr's value	Setting mode	Reference chapter
Po306	Position loop filter time constant	1~2000	ms	Pt,Pr	1	■	**6.5.12**
Po307	Pulses numbers range of position arrival	0~32000	Command unit	Pt,Pr	100	■	**6.5.8**
Po308	Command pulse clear function	Four-parameter	N/A	Pt,Pr	0011	■	—
Po309	Position error alarm pulses numbers	1~32000	Command unit	Pt,Pr	20000	■	**6.5.10**
Po310	Rotation numbers in position 000	-32000~+32000	N/A	Pr	0	■	**6.5.3**
Po311	Pulse numbers in position 000	-32000~+32000	N/A	Pr	0	■	**6.5.3**
Po312	Rotation numbers in position 001	-32000~+32000	N/A	Pr	0	■	**6.5.3**
Po313	Pulse numbers in position 001	-32000~+32000	N/A	Pr	0	■	**6.5.3**
Po314	Rotation numbers in position 010	-32000~+32000	N/A	Pr	0	■	**6.5.3**
Po315	Pulse numbers in position 010	-32000~+32000	N/A	Pr	0	■	**6.5.3**
Po316	Rotation numbers in position 011	-32000~+32000	N/A	Pr	0	■	**6.5.3**
Po317	Pulse numbers in position 011	-32000~+32000	N/A	Pr	0	■	**6.5.3**

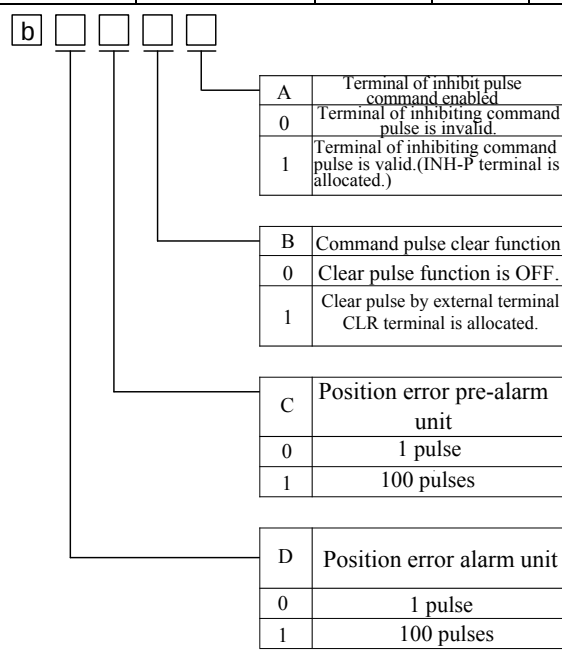

Po318	Rotation numbers in position 100	-32000~+32000	N/A	Pr	0	■	**6.5.3**
Po319	Pulse numbers in position 100	-32000~+32000	N/A	Pr	0	■	**6.5.3**
Po320	Rotation numbers in position 101	-32000~+32000	N/A	Pr	0	■	**6.5.3**
Po321	Pulse numbers in position 101	-32000~+32000	N/A	Pr	0	■	**6.5.3**
Po322	Rotation numbers in position 110	-32000~+32000	N/A	Pr	0	■	**6.5.3**
Po323	Pulse numbers in position 110	-32000~+32000	N/A	Pr	0	■	**6.5.3**
Po324	Rotation numbers in position 111	-32000~+32000	N/A	Pr	0	■	**6.5.3**
Po325	Pulse numbers in position 111	-32000~+32000	N/A	Pr	0	■	**6.5.3**
Po326 ~ Po329	Reserved						
Po330	Speed in position 000	0~32000	0.1r/min	Pr	0	■	**6.5.3**
Po331	Speed in position 001	0~32000	0.1r/min	Pr	0	■	**6.5.3**
Po332	Speed in position 010	0~32000	0.1r/min	Pr	0	■	**6.5.3**
Po333	Speed in position 011	0~32000	0.1r/min	Pr	0	■	**6.5.3**
Po334	Speed in position 100	0~32000	0.1r/min	Pr	0	■	**6.5.3**
Po335	Speed in position 101	0~32000	0.1r/min	Pr	0	■	**6.5.3**
Po336	Speed in position 110	0~32000	0.1r/min	Pr	0	■	**6.5.3**
Po337	Speed in position 111	0~32000	0.1r/min	Pr	0	■	**6.5.3**
Po340	Filter time of trigger terminal in internal position mode	0~10000	0.1ms	Pr	0	■	**6.5.3**
Po341	Internal position mode selection	0~1	N/A	Pr	0	■	**6.5.3**

Note: ★ indicates that function code can only be checked, but not be modified.
○ indicates that the setting value can not be saved after servo restarts.
● indicates that after changing these parameters, turn OFF the main circuit and control power supplies and then turn them ON again to enable the new settings.
■ indicates that after the parameter is set, the function of this parameter is effective immediately.
□ indicates that the parameter can be updated real time, and it is convenient to adjust the parameter.

Parameter	Name	Setting range	Setting unit	Control mode	Mfr's value	Setting mode	Reference chapter
Po400	Max speed corresponding to analog voltage	1~4000	0.1r/min	S	3000	■	**6.4.1**
Po401	Max torque corresponding to Analog torque	0~800	1% of rated torque	ALL	100	■	**6.6.1**
Po402	Analog speed command zero drift compensation	0~±32000	0.1 r/min	S	0	■	**6.5.1**
Po403	Analog torque command zero drift compensation	0 ~±300	1% of rated torque	ALL	0	■	**6.6.1**
Po404	Analog speed command filter time constant	1~100	0.1ms	S	10	■	**6.4.1**
Po405	Analog torque command filter time constant	1~100	0.1ms	ALL	10	■	**6.6.1**
Po406	Input terminal filter time constant	1~1000	0.1ms	ALL	5	■	—
Po407	DI1 terminal function selection	Two-parameter	N/A	—	—	●	**4.5.1**
Po408	DI2 terminal function selection	Two-parameter	N/A	—	—	●	**4.5.1**
Po409	DI3 terminal function selection	Two-parameter	N/A	—	—	●	**4.5.1**
Po410	DI4 terminal function selection	Two-parameter	N/A	—	—	●	**4.5.1**
Po411	DI5 terminal function selection	Two-parameter	N/A	—	—	●	**4.5.1**
Po412	DI6 terminal function selection	Two-parameter	N/A	—	—	●	**4.5.1**
Po413	DI7 terminal function selection	Two-parameter	N/A	—	—	●	**4.5.1**
Po414	DI8 terminal function selection	Two-parameter	N/A	—	—	●	**4.5.1**
Po415~ Po420	Reserved						
Po421	DO1 terminal function selection	Two-parameter	N/A	—	—	●	**4.5.2**
Po422	DO2 terminal function selection	Two-parameter	N/A	—	—	●	**4.5.2**
Po423	DO3 terminal function selection	Two-parameter	N/A	—	—	●	**4.5.2**
Po424	DO4 terminal function selection	Two-parameter	N/A	—	—	●	**4.5.2**
Po425~ Po449	Reserved						

Note: ★ indicates that function code can only be checked, but not be modified.
○ indicates that the setting value can not be saved after servo restarts.
● indicates that after changing these parameters, turn OFF the main circuit and control power supplies and then turn them ON again to enable the new settings.
■ indicates that after the parameter is set, the function of this parameter is effective immediately.
□ indicates that the parameter can be updated real time, it is convenient to adjust the parameter.

Parameter	Name	Setting range	Setting unit	Control mode	Mfr's value	Setting mode	Reference chapter
Po500	Communication address	1~247	N/A	ALL	1	■	**9.2.3**
Po501	Communication mode	0~1	N/A	ALL	1	■	**9.2.3**
Po502	Reserved						
Po503	Odd/even calibration	0~2	N/A	ALL	0	■	**9.2.3**
Po504	Baud rate	0~5	N/A	ALL	3	■	**9.2.3**
Po505	Whether communication is valid	0~1	N/A	ALL	0	■	**9.2.3**
Po506~ Po549	Reserved						

Note: ★ indicates that function code can only be checked, but not be modified.
○ indicates that the setting value can not be saved after servo restarts.
● indicates that after changing these parameters, turn OFF the main circuit and control power supplies and then turn them ON again to enable the new settings.
■ indicates that after the parameter is set, the function of this parameter is effective immediately.
□ indicates that the parameter can be updated real time, it is convenient to adjust the parameter.

VIII. Inspection, Maintenance, and Troubleshooting

8.1 Troubleshooting

8.1.1 Alarm Display Table

No.	Alarm Display	Alarm Name	Meaning
1	AL-01	Overcurrent	Output terminals are short-circuited or module is broken.
2	AL-02	Overvoltage	Main circuit DC voltage is excessively high.
3	AL-03	Undervoltage	Main circuit DC voltage is excessively low.
4	AL-04	Hardware error	Servodrive hardware error
5	AL-05	Reserved	
6	AL-06	Overload	Too high current is output for a long time.
7	AL-07	Overspeed	Speed is too high
8	AL-08	Abnormal pulse control command	The frequency of pulse is too high in the position mode.
9	AL-09	Position loop trace error overflow	Position loop trace error overflow
10	AL-10	Encoder abnormal	Servo motor wiring disconnected or servo motor locked rotor.
11	AL-11	Emergency stop	The terminal of emergency stop is valid.
12	AL-12	Servodrive overheat	The temperature of servodrive radiator is too high.
13	AL-13	Main circuit power supply outphase	The voltage of one phase power supply is too low.
14	AL-14	Energy consumption error	The parameters of braking are set wrong or braking for too long time.

8.1.2 Alarm code output

Users can define the meaning of output code, please refer to table 8.1.1.

ALO1	ALO2	ALO3	Output code	Parameters	Mfr‘s value	
0	0	1	001	So-27	1	Overcurrent
0	1	0	010	So-28	2	Overvoltage
0	1	1	011	So-29	3	Undervoltage
1	0	0	100	So-30	6	Overload
1	0	1	101	So-31	9	Position error overflow
1	1	0	110	So-32	11	Emergency stop
1	1	1	111	So-33	12	Servodrive overheat

For example, when So-27 is set to 2 and after over-voltage occurs, the output of ALO1, ALO2, ALO3 is OFF，ON, OFF.

Note: please do not repeat the values from So-27 to So-33.

8.1.3 Troubleshooting of Alarm and Warning

⚠ Caution

★ Please find the reason for error at first, and do not reset the servo as soon as fault occurs.
★ When an error occurs in servodrive, please check it according the manual. Contact the distributor or manufacturer if the problem cannot be solved by the described corrective action.

Alarm display	Name	Cause	Corrective Actions
AL-01	Overcurrent	Wrong connection	Correct the wiring
		A short circuit occurred between phases U, V, and W of servo motor.	Repair or replace the servo motor main circuit cable.
		A short circuit occurred between the grounding and U, V, or W of the servo motor cable.	Repair or replace the servo drive.
		Wrong action because of interference	Adopt anti-interference measures
		Servodrive malfunction	Repair or replace servodrive
AL-02	Overvoltage	The voltage of power supply is too high	Check whether the input voltage is lower than rated voltage.
		Rotation inertia of load is too high.	Increase the deceleration time.
			Select an external braking resistor.
			Decrease the load.
			Increase the capacity of servodrive.
AL-03	Undervoltage	The input voltage is too low.	Check whether power supply is normal.
AL-04	Hardware error	Hardware error in the servodrive	Please contact with manufacturer.
AL-05	Reserved		
AL-06	Overload	The wiring of servo motor and encoder is disconnected.	Check the wiring of servo motor and encoder.
		Caused by machine.	Check machine gear ratio.
		Motor starts running before electromagnetic braking is released.	Check the wiring of electromagnetic braking.
		Load is too heavy	Decrease the load.
			Increase the capacity of servodrive.
AL-07	Overspeed	The speed of servo motor is higher than the max rotation speed.	Check whether the wiring of servo motor and encoder is normal. And check the machine situation.
AL-08	Abnormal pulse control command.	The frequency given by position pulse command is too high.	Adjust the frequency value.

Alarm display	Name	Cause	Corrective Actions
AL-09	Position error overflow	Wirings of the servo motor U, V, and W or encoder are incorrect.	Correct the wiring.
		Servodrive gain is too low.	Increase the gain.
		The position command pulse frequency is too high.	Decrease the position command pulse frequency or adjust electronic gear ratio
AL-10	Abnormal encoder	The wiring of encoder is disconnected or servo motor rotor is locked.	Check the wiring of encoder.
		Servodrive fault.	Restart the servodrive, if the fault still exists, please contact with manufacturer.
AL-11	Emergency stop	The logic setting of input terminal with ESP function is different with wiring type.	Check the wiring or modify terminal logic setting.
		The input terminal with ESP function is damaged.	Please use the other terminal to realize this function or contact with manufacturer.
AL-12	Servodrive overheat	Ambient temperature too high	Improve the ventilation situation.
		Radiator is too dirty.	Clean the radiator.
		There is foreign matter in the fan.	Remove the foreign matter.
		Fan is damaged.	Replace the fan.
		Servo is installed incorrectly. For example: bad ventilation and installation direction is wrong.	Install servodrive as required.
		Load is too heavy.	
		Discharge energy is too high.	
AL-13	Main circuit power supply out-phase.	The voltage of one phase is too low when main circuit is powered on.	Check whether power supply is out-phase.
		Check whether single-phase power supply is connected to main circuit.	Check whether the parameters are set correctly.
AL-14	Braking fault.	The parameter of braking resistor is wrong.	Modify the parameters.
		Continuous braking time is too long.	Check the load, servo can only drive the non-potential energy load.

8.1.4 Other malfunction

Malfunction	Cause	Measure
Servo motor does not run.	Main circuit power supply is disconnected.	Check the wiring.
	Control circuit power supply is disconnected.	Check the wiring.
	The wiring of I/O terminal is wrong.	Check the wiring.
	The wiring of servo motor or encoder is wrong.	Check the wiring.
	Control command is not inputted.	Input control command correctly.
	Some wrong using of input/output terminal. For example: servo on terminal is disconnected or it is defined wrong.	Define and use control terminal correctly.
	Forward/reverse rotation prohibited.	Make the function of forward/reverse rotation prohibited invalid.
	Torque limited.	Check the parameters of torque limited function.
	Servodrive fault.	Maintain or replace servodrive.
Servo motor moves instantaneously, and then Stops	Servo motor wiring is incorrect.	Check the wiring.
	Servodrive fault.	Please contact with manufacturer.
Abnormal noise from servo motor	Mounting not secured	Check the mounting screws and tighten them.
		Align the couplings.
	Wrong parameters setting	Check servodrive parameters.
	Defective bearings	Replace the servo motor.
	Driven machine fault	Check whether there are any foreign matters, damages or deformation on the machine section.
	Encoder fault	Check whether the cable of encoder is damaged.

8.2 Inspection and Maintenance

8.2.1 Check and maintenance

The items should be checked and maintained:

(1) Check whether temperature and humidity is normal, whether there is dust, grain, foreign matter.

(2) Check whether motor has abnormal noise and vibration.

(3) Check whether there is smell.

(4) Check whether there is loose connection.

(5) Check whether the difference between monitor display value and actual value is too high.

(6) Check whether the fan runs normally.

8.2.2 Servo drive's parts replacement

⚠ Danger

★ The electric or electronic parts are subject to mechanical wear or deterioration over time. To avoid failure, replace these parts at the frequency indicated.

★ When changing the parts, please contact with manufacturer.

Equipment	Part	Standard Replacement Period	Remarks
Servo drive	Cooling Fan	About 2 years	The replacement period is for reference only, if any part is damaged, please replace or maintain it immediately.
	Electrolytic Capacitor on Circuit Board	About 3 years	
	Big electrolytic capacitor	About 5 years	
Servo motor	Bearing	3~5 years	
	Encoder	3~5 years	

IX. Appendix

9.1 Servo Gain Adjustment Methods

The servodrive has the servo gains to determine the servo response characteristics. The servo gains are set in the parameters. Please pay attention to the relationship between the related parameters when adjusting servo gain.

Generally, increasing servo gain can increase responsiveness for great rigidity machine. But for low rigidity machine, when servo gain increases, vibration will occur and responsiveness will not increase. Please select great rigidity machine for high responsiveness occasion to avoid machine vibration.

High response frequency is needed for high precision positioning machine and accurate processing machine. But high response frequency will lead to machine vibration. When response frequency allowed by machine is unknown, please increase the gain gradually to increase response frequency until vibration occurs, then decrease gain setting value.

9.1.1 Related parameters

Gain parameters table:

Parameters	Name	Remarks
Po301	Position loop proportional gain 1	Please refer to 9.1.2
Po134	Position loop proportional gain 2	Please refer to 9.1.2
Po302	Position loop feedforward gain	Please refer to 9.1.2
Po101	Speed loop proportional gain 1	Please refer to 9.1.2
Po102	Speed loop integral gain 1	Please refer to 9.1.2
Po103	Speed loop integral gain 2	Please refer to 9.1.2
Po104	Speed loop proportional gain 2	Please refer to 9.1.2
Po105	Speed loop feedforward gain	Please refer to 9.1.2

9.1.2 Parameters meaning and instructions

Po301	Position loop proportional gain 1			Position
	Setting range	Setting unit	Mfr‘s value	When enabled
	50~20000	N/A	—	Effective Immediately

Po134	Position loop proportional gain 2			Position
	Setting range	Setting unit	Mfr‘s value	When enabled
	50~20000	N/A	1000	Effective Immediately

The responsiveness of the position loop is determined by the position loop gain. The responsiveness increases and the positioning time decreases when the position loop gain is set to a higher value. In general, the position loop gain cannot be set higher than natural vibrating frequency of the mechanical system, so the mechanical system must be made more rigid to increase its natural vibrating frequency and allow the position loop gain to be set to a high value.

Po302	Position loop feedforward gain			Position
	Setting range	Setting unit	Mfr's value	When enabled
	0~100	N/A	—	Effective Immediately

Appling feedforward compensation shortens positioning time. Too high value may cause the machine to vibrate.

Instructions:

If KP is too high, motor rotor will vibrate back and forth, so please decrease the value of KP until motor rotor does not vibrate. Please set position loop feedforward gain Po302 correctly to decrease position trace error.

Po101	Speed loop proportional gain 1			Position Speed
	Setting range	Setting unit	Mfr's value	When enabled
	100~30000	N/A	—	Effective Immediately

Po103	Speed loop proportional gain 2			Position Speed
	Setting range	Setting unit	Mfr's value	When enabled
	100~30000	N/A	100	Effective Immediately

This parameter determines the responsiveness of the speed loop. The higher the setting value is, the higher the gain is. But the high setting value will lead to mechanical resonance. The frequency in speed mode should be 4~6 times of the frequency in position mode. When the frequency in position mode is higher than the frequency in speed mode, it will cause machine vibration or overshooting.

When the inertia ratio increases, the speed response will decrease. Increasing speed loop gain can improve this situation. But if the speed loop gain is too high, machine will vibrate (motor has abnormal sound) during the start or stop process. So please set the speed loop gain to 50~80 percent of gain when machine vibrates.

Po102	Speed loop integral gain 1			Position Speed
	Setting range	Setting unit	Mfr's value	When enabled
	0~10000	N/A	—	Effective Immediately

Po104	Speed loop integral gain 2			Position Speed
	Setting range	Setting unit	Mfr's value	When enabled
	0~10000	N/A	100	Effective Immediately

This function is used to increase speed response. Decreasing speed integral gain can decrease overshoot during acceleration/deceleration process. Increasing speed integral gain can improve rotation instable.

Increasing speed integral gain can increase speed response and decrease speed error. If this value is set too high, vibration and noise will increase.

Po105	Speed loop feedforward gain			Position Speed
	Setting range	Setting unit	Mfr's value	When enabled
	0~100	N/A	0	Effective Immediately

When the speed command changes smoothly, increasing speed loop feedforward gain can decrease speed error.

When the speed command does not change smoothly, decreasing speed loop feedforward gain can decrease rotation vibration.

9.1.3 Gain switchover setting

Po130	Gain switchover setting			Position Speed
	Setting range	Setting unit	Mfr‘s value	When enabled
	0~100	N/A	0	Effective Immediately

The switchover between gain 1 and gain 2 can be realized by Po130.
Gain 1 includes speed loop proportion gain 1 (Po101), speed loop integral gain 1 (Po102) and position loop proportion gain 1 (Po301).
Gain 2 includes speed loop proportion gain 2 (Po103), speed loop integral gain 2 (Po104) and position loop proportion gain 2 (Po134).

Parameter	Remarks
Po130=0	No switchover, the default setting is gain 1.
Po130=1	When the speed is higher than the speed set by Po131, it will switch automatically to gain 2, or else, it will switch to gain 1.
Po130=2	When IO interface has signal, it will switch automatically to gain 2, orelse,it will switch to gain 1. The IO signal is controlled by programmable input terminals, please refer to 4.5.1
Po130=3	When the remaining pulse numbers is higher than Po132, it will switch automatically to gain 2, or else, it will switch to gain 1.

The related parameters are as following:

Po131	Gain switchover speed			Position Speed
	Setting range	Setting unit	Mfr‘s value	When enabled
	1~32000	0.1r/min	100	Effective Immediately
Po132	Gain switchover pulse			Position Speed
	Setting range	Setting unit	Mfr‘s value	When enabled
	1~32000	N/A	100	Effective Immediately

Po133	Gain smooth switchover time			Position Speed
	Setting range	Setting unit	Mfr‘s value	When enabled
	1~32000	0.1ms	20	Effective Immediately
	The switchover time between both gain			

Po135	Gain switchover delay time			Position Speed
	Setting range	Setting unit	Mfr‘s value	When enabled
	1~32000	0.1ms	1000	Effective Immediately

9.1.4 Rigid setting

Rigid grade	P101	P102		Rigid grade	P101	P102
1	100	50		9	900	700
2	200	100		10	1000	700
3	300	200		11	1100	800
4	400	280		12	1200	900
5	500	300		13	1300	1000
6	600	400		14	1400	1100
7	700	500		15	1500	1100
8	800	600		16	1600	1200

Po010	Rigid setting			Position Speed
	Setting range	Setting unit	Mfr's value	When enabled
	1~16	N/A	—	Effective Immediately
	The time from a gain switching to the other.			

The rigid grade can be checked by Po010.

9.2 Communication

The Servo drive provides RS485 communication. The description below shows the communication wiring and communication protocol.

9.2.1 MODBUS General

Modbus is a serial and asynchronous communication protocol. Modbus protocol is a general language applied to PLC and other controlling units. This protocol has defined an information structure which can be identified and used by a controlling unit regardless of whatever network they are transmitted.

You can read reference books or ask for the details of MODBUS from manufactures.
Modbus protocol does not require a special interface while a typical physical interface is RS485.

9.2.2 MODBUS Protocol

1 Transmission mode

(1) ASCII mode

In ASCII mode, one Byte (hexadecimal format) is expressed by two ASCII characters.
For example, 31H (hexadecimal data) includes two ASCII characters‘3(33H)‘,‘1(31H)‘.
Common characters, ASCII characters are shown in the following table:

Characters	‘0‘	‘1‘	‘2‘	‘3‘	‘4‘	‘5‘	‘6‘	‘7‘
ASCII Code	30H	31H	32H	33H	34H	35H	36H	37H
Characters	‘8‘	‘9‘	‘A‘	‘B‘	‘C‘	‘D‘	‘E‘	‘F‘
ASCII Code	38H	39H	41H	42H	43H	44H	45H	46H

(2) RTU mode

In RTU mode, one Byte is expressed by hexadecimal format. For example, 31H is delivered to data packet.

2 Baud rate

Setting range: 1200, 2400, 4800, 9600, 19200, 38400, 57600

3 Frame structure:

(1) ASCII mode

Byte	Function
1	Start Bit (Low Level)
7	Data Bit
0/1	Parity Check Bit (None for this bit in case of no checking. Otherwise 1 bit)
1/2	Stop Bit (1 bit in case of checking, otherwise 2 bits)

(2) RTU mode

Byte	Function
1	Start Bit (Low Level)
8	Data Bit
0/1	Parity Check Bit (None for this bit in case of no checking. Otherwise 1 bit)
1/2	Stop Bit (1 bit in case of checking, otherwise 2 bits)

4 Error Check

(1) ASCII mode

Longitudinal Redundancy Check (LRC): It is performed on the ASCII message field contents excluding the ‗colon‘ character that begins the message, and excluding the CRLF pair at the end of the message.
The LRC is calculated by adding together successive 8–bit bytes of the message, discarding any carries, and then two‘s complementing the result.
A procedure for generating an LRC is:
1. Add all bytes in the message, excluding the starting ‗colon‘ and ending CRLF. Add them into an 8–bit field, so that carries will be discarded.
2. Subtract the final field value from FF hex (all 1‘s), to produce the ones–complement.
3. Add 1 to produce the twos–complement.

(2) RTU mode

CRC-16 (Cyclical Redundancy Check), please read reference books or ask for the details from manufactures.

II Command Type & Format

1 The listing below shows the function codes.

Code	Name	Description
03	Read Holding Registers	Read the binary contents of holding registers in the slave. (Less than 10 registers once time)
06	Preset Single Register	Preset a value into holding register

2 Format

(1) ASCII mode

Start	Address	Function	Data				LRC check		End	
: (0X3A)	Servo drive Address	Function Code	Data length	Data 1	… …	Data N	High-order byte of LRC	Low-order byte of LRC	Return (0X0D)	Line Feed (0X0A)

(2) RTU mode

Start	Address	Function	Data	CRC check		End
T1-T2-T3-T4	Servo drive Address	Function Code	N data	Low-order byte of CRC	High-order byte of CRC	T1-T2-T3-T4

(3) Protocol Converter

It is easy to turn a RTU command into an ASCII command followed by the lists:

1) Use the LRC replacing the CRC.
2) Transform each byte in RTU command into a corresponding two byte ASCII. For example: transform 0x03 into 0x30, 0x33 (ASCII code for 0 and ASCII code for 3).
3) Add a ‗colon‘ (:) character (ASCII 3A hex) at the beginning of the message.
4) End with a ‗carriage return – line feed‘ (CRLF) pair (ASCII 0D and 0A hex).

So we will introduce RTU Mode in followed part. If you use ASCII mode, you can use the up lists to convert.

3 Parameter address rules

The address of P group parameters is the parameter numbers.

Ex1：communication address of Po101:

The parameter numbers of Po101 is 101, the hex format is 0x0065. The address of high bit is 0x00 and the address of low bit is 0x65.

Ex2：communication address of Po407:

The parameter numbers of Po407 is 407, the hex format is 0x0197. The address of high bit is 0x01 and the address of low bit is 0x97.

The address of S group parameters equals to parameter numbers +800

Ex3：communication address of So-02:

The parameter numbers of So-02 is 02, so the address of So-02 is 802, the hex format is 0x0322. The address of high bit is 0x03 and the address of low bit is 0x22.

A part of L group data is 32-bit data, please refer to following table:

Communication address	Meaning		Communication address	Meaning
900	Servodrive output current high 16 bits		914	Given speed high 16 bits
901	Servodrive output current low 16 bits		915	Given speed low 16 bits
902	Servodrive bus voltage high 16 bits		916	Given torque high 16 bits
903	Servodrive bus voltage low 16 bits		917	Given torque low 16 bits
904	Servo motor rotation speed high 16 bits		918	Analog speed high 16 bits
905	Servo motor rotation speed low 16 bits		919	Analog speed low 16 bits
906	Servo motor feedback pulse numbers high 16 bits		920	Analog torque high 16 bits
907	Servo motor feedback pulse numbers low 16 bits.		921	Analog torque low 16 bits
908	Servo motor feedback rotation high 16 bits		922	Reserved
909	Servo motor feedback rotation low 16 bits		923	Bit mode, low 8 bits stands for DI8~DI1 status.(Note)
910	Given pulse numbers high 16 bits		924	Reserved
911	Given pulse numbers low 16 bits		925	Bit mode, low 8 bits stands for DO8~DO1 status.(Note)
912	Pulse counting deviation high 16 bits		926	Bit mode, alarm code (Note)
913	Pulse counting deviation low 16 bits			

Note: please refer to 4 Reading and writing rules of parameters about bit mode.

Ex4：The address of servo motor feedback pulse numbers

From the above table, the address of servo motor feedback pulse includes high 16 bits (Communication address is 906, the hex form is 0x038A) and low 16 bits(Communication address is 907, the hex form is 0x038B). Read the data from the address and process them.

4 Reading and writing rules of parameters

Except two-parameter and four-parameter, the other parameters can be read directly, the data is 16-bit integer (it is complement form).

Concerning for two-parameter and four-parameter, the written and read value is hexadecimal format (The marking bits of d and b do not occupy communication bit). Under line “_” means that the bit is not displayed.

Ex5：Two-parameter mode is d_1_1, so the hex format is 0x101, so the read result is 257.

Ex6：Four-parameter mode is b1234, so 0x1234 is written, and b1234 is displayed after the order succeeds.

The special instructions for 32-bit data are as the following.

Ex7：Read servo motor feedback pulse numbers. Separately read high 16-bit and low 16-bit parameters value, shift high 16-bit data 16 bits to the left, and execute OR with low 16-bit, and confirm positive and negative according to the highest bit 0 or 1. If the highest bit is 0, the data is actual servo motor feedback pulse numbers and the data is positive number. If the highest bit is 1, to negate every bit and to add 1 to them, which equals to servo motor feedback pulse numbers and it is a negative number. If high 16 bit is 65534 and low bit is 31073, the binary form of which is 1111111111111110 and 111100101100001, after shifting high 16-bit data to the left, the data becomes 11111111111111100111100101100001. The highest data is 1, so the data is negative. Negate the data, the data becomes 11000011010011110, and add 1 to the data, the data becomes 11000011010011111, the decimal form is 99999. Because it is a negative number, so it is -99999.

Bit mode meaning in monitor group:

The parameter meaning in address 923:

MSB	←														LSB
16	15	14	13	12	11	10	9	8	7	6	5	4	3	2	1
—	—	—	—	—	—	—	—	DI8	DI7	DI6	DI5	DI4	DI3	DI2	DI1

The parameter meaning in address 925:

MSB	←														LSB
16	15	14	13	12	11	10	9	8	7	6	5	4	3	2	1
—	—	—	—	—	—	—	—	DO8	DO7	DO6	DO5	DO4	DO3	DO2	DO1

The parameter meaning in address 926:

MSB	←														LSB
16	15	14	13	12	11	10	9	8	7	6	5	4	3	2	1
—	—	AL-14	AL-13	AL-11	AL-10	AL-10	AL-09	AL-08	AL-07	AL-06	AL-05	AL-04	AL-03	AL-02	AL-01

Note: ——" means –reserved", which is used to add new function.

5 Example:

(1) In RTU mode, change acc time (Po109) to 5ms in No. 01 servo drive.

Host query:

Address	Function	Register Address Hi	Register Address Lo	Write status Hi	Write status Lo	CRC Lo	CRC Hi
01	06	00	6D	00	05	D8	14

Servo 1 write register Po109 5(Unit: ms) CRC check

Slave response:

Address	Function	**Register Address Hi**	**Register Address Lo**	Write status Hi	Write status Lo	**CRC Lo**	**CRC Hi**
01	06	00	6D	00	05	D8	14

Servo 1 write register Po109 5(Unit: ms) CRC check

(1) In RTU mode, read acc time (Po109) of No. 01 servo drive.

Host query:

Address	Function	First register Hi	First register Lo	Numbers of register Hi	Numbers of register Lo	CRC Lo	CRC Hi
01	03	00	6D	00	01	15	D7

Servo 1 read register Po109 one register CRC check

Slave response:

Address	Function	Data numbers	Data Hi	Data Lo	CRC Lo	CRC Hi
01	03	02	00	C8	00	B9

Servo 1 write register 2 bits 200(Unit: ms) CRC check

9.2.3 Parameter related to communication

Function Code	Function Definition	Setting Range	Setting unit	Mfr's Value	Remarks
Po500	Communication address	1~247	—	1	
Po501	Communication mode	0~1	—	1	0：RTU 1：ASCII
Po503	Parity check selection	0~2	—	0	0: No checkout 1: Odd 2: Even
Po504	Baud rate	0~5	bit/s	3	0: 2400 1: 4800 2: 9600 3: 19200 4: 38400 5: 57600

⚠ Note: Please set functions code related to communication consonant with the PLC/PC communication parameters, when inverter communicates with PLC/PC.

The command from PC will be written into data memory of servodrive immediately, it is not good to write the data into the memory continuously.

Permission of Read&Write:

Parameter		Remarks
Po505	0	Permission of Read &Write, the communication data is allowed to be written into data register.
	1	Prohibition of Read&Write, the communication commands are only executed, but they are not allowed to be written into data register. If the servodrive is power off, data will be lost and they needs to be written again.

9.2.4 Physical Interface

1 Interface instruction

The RS485 communication interface is in the connector CN1.

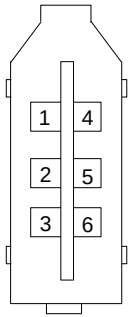

Terminal	Function	Name
CN1-1	—	—
CN1-2	—	—
CN1-3	Differential output -	B-
CN1-4	—	—
CN1-5	—	—
CN1-6	Differential output +	A+

Fig 9-2-1 CN1 connector terminals

2 Structure of Field Bus

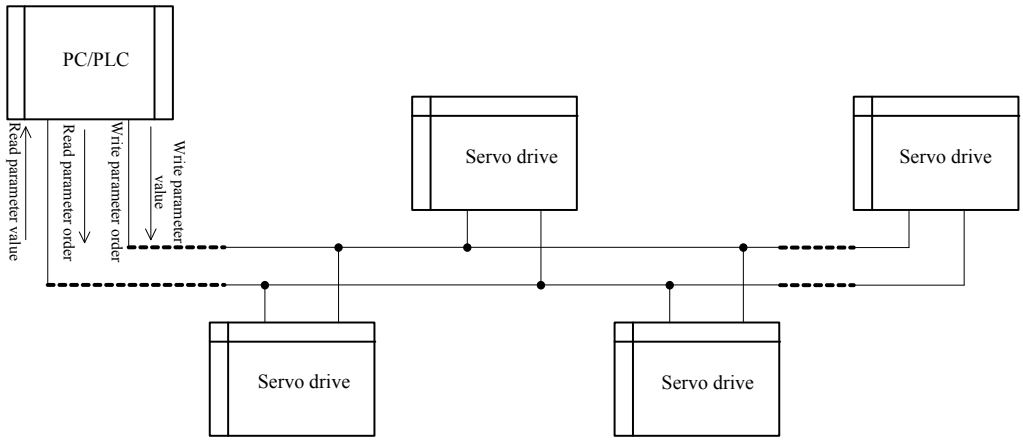

Fig 9-2-2 Connecting diagram of field bus

RS485 Half-duplex communication mode is adopted for servodrive. Daisy chain structure is adopted by 485 Bus-line. Do not use 'spur' lines or a star configuration. Reflect signals which are produced by spur lines or star configuration will interfere in 485 communications.

Please note that for the same time in half-duplex connection, and only one inverter can have communication with PC/PLC. Should two or more than two inverters upload data at the same time, then bus competition will occur, which will not only lead to communication failure, but higher current to certain elements as well.

3 Grounding and Terminal

Terminal resistance of 120Ω will be adopted for terminal of RS485 network, to diminish the reflection of signals. Terminal resistance shall not be used for intermediate network.

No direct grounding shall be allowed for any point of RS485 network. All the equipment in the network shall be well grounded via their own grounding terminal. Please note that grounding wires will not form closed loop in any case.

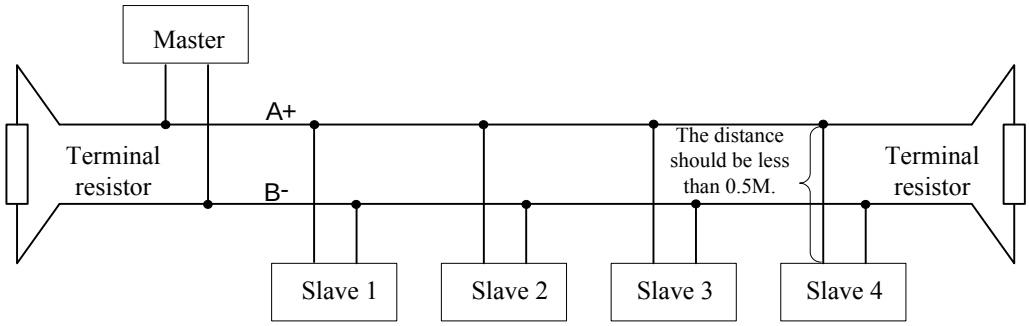

Fig 9-2-3 Connecting Diagram of Terminal Resistance

Please think over the drive capacity of PC/PLC and the distance between PC/PLC and inverter when wiring. Add a repeaters if drive capacity is not enough.

All wiring connections for installation shall have to be made when the inverter is disconnected from power supply.

20110126 01