MONTIGO®
the art of fireplaces

Divine H36PV

POWER VENT FLUSH FACE FIREPLACE

NOTICE

Installer: Leave this manual with the appliance.
Consumer: Retain this manual for suture reference.

⚠ WARNING:
FIRE OR EXPLOSION HAZARD
Failure to follow safety warnings exactly could result in serious injury, death, or property damage.

- **Do not store or use gasoline or other flammable vapors and liquids in the vicinity of this or any other appliance.**
- **WHAT TO DO IF YOU SMELL GAS**
  - **Do not try to light any appliance.**
  - **Do not touch any electrical switch; do not use any phone in your building.**
  - **Leave the building immediately.**
  - **Immediately call your gas supplier from a neighbour's phone. Follow the gas supplier's instructions.**
  - **If you cannot reach your gas supplier, call the fire department.**
- **Installation and service must be performed by a qualified installer, service agency or the gas fitter.**

⚠ CAUTION

Installation and service must be performed by a qualified installer, service agency or the gas fitter.

⚠ DANGER

Read and understand this manual. Improper installation, adjustment, alteration, service or maintenance can cause serious injury, property damage or even death. For assistance or additional information consult a qualified installer, service agency or the gas supplier.

⚠ WARNING

Some materials used in the manufacturing process of this product can expose you to Benzene which is known in the State of California to cause cancer and birth defects or other reproductive harm. For more information go to www.P65warnings.ca.gov

⚠ DANGER

HOT GLASS WILL CAUSE BURNS.

DO NOT TOUCH GLASS UNTIL COOLED.

NEVER ALLOW CHILDREN TO TOUCH GLASS.

A barrier designed to reduce the risk of burns from the hot viewing glass is provided with this appliance and must be installed for the protection of children and other at-risk individuals.

NOTICE

You must read and understand this manual prior to installation, operation or troubleshooting this appliance. Please retain this owner's manual for future reference and maintenance.

Table of Contents

Instruction Manual Contents
Safety Alerts 3
Introduction 3
Section A: Before You Start 4
Pre-Installation Checklist 4
Rating Plate Sample 5
Section 1: Installation Overview and Product Dimensions 6
Clearances 6
Section 2: Framing 7
Section 3: Finishing 9
Fireplace Facing 9
Mantels & Surrounds 9
Section 4: Installing the Power Vent 10
Installing a Roof Mounted Vertical Exterior Power Vent (EDVRSPV58) 10
Venting Layout - Roof Mounted Vertical Exterior Power Vent 10
Venting Components 11
Venting Layout - Wall Mounted Vertical Exterior Power Vent 14
Section 5: Wiring 21
Conduit & Wiring clearances 24
Section 6: Installing the Gas Line 25
FUEL CONVERSION 25
GAS PRESSURE 25
GAS CONNECTION 25
Section 7: Installing & Removing the Screen and Door 26
Section 8: Installing the Log Set 28
Section 9: Operation - Start up Sequence 30
Standing (Continuous) Pilot Ignition (SIT NOVA 820) 30
Section 10: Maintenance 31
Removing the Log Grate: 31
Removing the Refractory: 31
Removing the Stand-off Panels: 32
Removing the Access Panel: 32
General 33
Cleaning 33
Troubleshooting (only to be done by qualified service personnel): 34
Replacement Parts: 34
Appendix A: Power Vent Locations 35
Appendix B: Warranty 37
Appendix C: State of Massachusetts 38

Safety Alerts

Safety Alert Key

DANGER

Indicates a hazardous situation which, if not avoided, WILL result in death or serious injury or property damage.

WARNING

Indicates a hazardous situation which, if not avoided, COULD result in death or serious injury or property damage.

CAUTION

Indicates a hazardous situation which, if not avoided, WILL result in minor or moderate injury.

NOTICE

Address practices that are important, but not related to personal injury

Introduction

Introduction

Congratulations on your purchase of a **Montigo Fireplace**.

With over 30 years of experience, Montigo is committed to providing you with a gas fireplace that is not only a beautiful addition to your space, but that is also designed and manufactured to the highest safety, reliability and engineering standards.

We strongly encourage you to read and carefully follow the instructions laid out in this Installation, Operation and Maintenance Manual and retain it for your future reference. Pay special attention to all cautions, warnings, and notices throughout this manual intended to ensure your safety.

This manual covers installation, operation and maintenance. Lighting, operation and care of this fireplace can be easily performed by the homeowner. All installation and service work should be performed by a qualified or licensed installer, plumber or gas fitter as certified by the state, province, region or governing body where the fireplace is being installed.

This installation, operation and maintenance manual is applicable to the models described below. Refer to your rating plate to verify included options.

Warranty and Installation Information: (See Appendix B)

The Montigo warranty will be voided by, and Montigo disclaims any responsibility for, the following actions:

► Modification of the fireplace and/or components including Direct-Vent assembly or glass doors.

► Use of any component part not manufactured or approved by Montigo in combination with this Montigo fireplace system.

► Installation other than as instructed in this manual.

Consult your local Gas Inspection Branch on installation requirements for factory-built gas fireplaces. Installation & repairs should be done by a qualified contractor.

CAUTION

Young children should be carefully supervised when they are in the same room as the applicance. Toddlers, young children and others may be susceptible to accidental contact burns. A physical barrier is recommended if there are at risk individuals in the house. To restrict access to a fireplace or stove, install an adjustable safety gate to keep toddles, young children and other at risk individuals out of the room and away from hot surfaces.

Fireplace BTU/H Input					
Model#	**Natural Gas**	**Propane**	**Venting Type**	**Burner Type**	**Ignition Type**
H36PVN	55,000	---	Top Power Vent	Traditional	IPI Electronic Ignition

Installation

Section A: Before You Start

Important Message

Save these Instructions

The H36PV Power Vent fireplaces must be installed in accordance with these Instructions. Carefully read all the Instructions in this manual first. Consult the Local Gas Branch to determine the need for a permit prior to starting the installation. It is the responsibility of the installer to ensure this fireplace is installed in compliance with the manufacturers instructions and all applicable codes.

BEFORE YOU START:

NOTICE

Installation and repairs should be done by an authorized gas fireplace service technician. The appliance should be inspected before use and at least annually by a professional. More frequent cleaning may be required due to excessive lint from carpeting, bedding material, etc. It is imperative that control compartments, burners and circulating air passageways of the fireplace are kept clean.

CAUTION

Due to high operating temperatures, this appliance should be located out of traffic & away from furniture and draperies.
Children and adults should be alerted to the hazards of the high surface temperature, which could cause burns or clothing ignition.
Young children should be carefully supervised when they are in the same room as the appliance.
Clothing or other flammable materials should not be placed on or near the appliance.

DANGER

When this appliance is installed directly on any combustible material other than wood flooring, it must be installed on a metal or wood panel extending the full width and depth of the appliance or a fire will occur causing serious injury, property damage or even death.

WARNING

Any safety screen, guard, or barrier removed for servicing an appliance must be replaced prior to operating the appliance.

Pre-Installation Checklist

- Determine the desired install location of your fireplace.
- See Section 1, Dimensions on Page 5, and refer to the Framing Section 2 for details.
- Select your type and location of your Power Vent run: Roof Mounted (EDVRSPV58) or Wall Mounted (EDVWSPV58) or LDVPV58 (Inline Power Vent).
- Your termination location should be selected to provide the shortest possible vent run.
- Lay out the Vent run; calculating the required elbows and straight runs of 5"/8" flex and/or rigid pipe.
- Refer to the Section 4 on Page 10, "Installing the Power Vent" for details.
- Montigo supplies 20' of low voltage wire, which can be spliced to any length. This wire CANNOT run in conduit with any other wire.
- Refer to Section 5 on Page 18, for Wiring Details.
- The gas connection is located on the bottom side of the fireplace.
- Refer to local codes and guidelines for installation requirements.
- Installation and repairs should be done by a qualified contractor and must conform to:
  - **Installations in Canada** must conform to the currentCAN/CGAB-149.1and.2GasInstallationCodeand local regulations.
  - **Installations in the USA** must conform to local codes, or in the absence of local codes to the National Fuel Gas Code, ANSI Z223.1.
  - **See Appendix C for installation within the State of Massachusetts.** This fireplace must comply with NFPA-54 Chapter 10.
- Refer to Section 6 Page 24, "Installing the Gas Line" for Details.

Understanding the Basic Operation

Residential H36PV fireplace

To operate the fireplace, Montigo has supplied and installed twenty feet of low voltage wire to this electrical control panel. Connect the two wire harness to a standard single pole ON/Off switch located at a location of your choice. You may also extent these wires to any length, as long as you select a wire of equal quality.

Installation

Rating Plate Sample

Type: **Vented Gas Fireplace** **For Indoor Use Only**

Not for use with solid fuel. / Pas pour l'usage avec le combustible solide.
Not for use with air filters. / Pas pour l'usage avec des filtres à air.

Model No. Modèle. H36PV-F

Serial No.: 3-150302-000000

Manufacturer / Fabricant: Canadian Heating Products Inc., Langley BC, 1-800-378-3115
Montigo DelRay Corp., Ferndale, WA, 1-800-789-6236

Tested To / Examiné À: **ANSI Z21.50-2014/CSA 2.22-2014**

Electrical Rating / Estimation Électrique: Power Vent 115V / 1Ph / 60Hz /Less than 12A

Altitude Rating / Estimation D'Altitude: N & H (0 - 4500 ft. / 0 - 1371 m.)

Fuel Type / Type De Carburant:

***Clearance to Combustibles**	
***Degagements Aux Combustibles**	
Sides/Côtés:	0"
Back/Derrière:	1"
Top- Top Vent/Du Haut-Évent Du Haut:	8"
Top-Rear Vent/Du Haut-Évent Arrière:	8"
Floor/Plancher:	0"
Mantel/Manteau:	6"
Recess Depth/ Profondeur D'Encadrement:	24"
Flue:	1"

Max. Input Max. Entrée BTU/H	Min. Input Min. Entrée BTU/H	Output / Rendement BTU/H	Orifice Size / Taille D'Orifice Front/Avant Rear/Derrière	Gas Manifold Pressure / Pression D'Admission Du Gaz	Min. Gas Supply Pressure/ Min. Pression D'Alimentation Du Gaz
55,000	55,000	N/A	1@51 DMS / 2@36 DMS	3.5" W.C.	5.5" W.C.
50,000	50,000	N/A	1@61 DMS / 54L, 53R	10" W.C.	11" W.C.

☒ **N - Natural Gas / Gaz Naturel**

☐ **LP - Propane / Gaz Propane**

FOR USE WITH GLASS DOORS AND SCREENS CERTIFIED WITH THE APPLIANCE ONLY
Pour utilisation avec portes de verre and écrans de certifiés avec l'appareil seulement

***Refer to installation manual for more information.**
*Référez-vous au manuel d'installation pour plus d'information.

LB1225 Rev5.0 IPI-PV with screen 2015.03.02

Do Not Remove This Label
N'enlevez Pas Cette Étiquette

Figure A: *Rating Plate for IPI eletronic ignition*

Installation

Section 1: Installation Overview and Product Dimensions

Please review the Pre-Installation Checklist on Page 4 for general information on preparing for a successful installation of your fireplace.

The H-Series H36PVN & fireplace

The H36PVN fireplaces may be installed in any location that maintains proper clearances to air conditioning ducts, electrical wiring and plumbing. Safety, as well as efficiency of operation, must be considered when selecting the fireplace location. Try to select a location that does not interfere with room traffic, has adequate ventilation, and offers an accessible pathway for Power Vent installation.

The fireplace dimensions are shown below:

Clearances

To ensure the H-Series H36PVN Fireplaces operate safely, all models must maintain the following clearances.

Clearances to Combustibles					
Model#	Top	Sides	Back	Floor (under)	Floor (front)*
H36PVN	8"	0"	1"	0"	0"

*Note: Finishing hardwood, laminate flooring, or tile may be placed directly in front of fireplace, however Montigo waives responsibility for discoloration of flooring materials. Ability to withstand heat should be discussed with the flooring manufacturer. If carpet is to laid there must be a 12" clearance or hearth between the front of the fireplace and the start of the carpet.

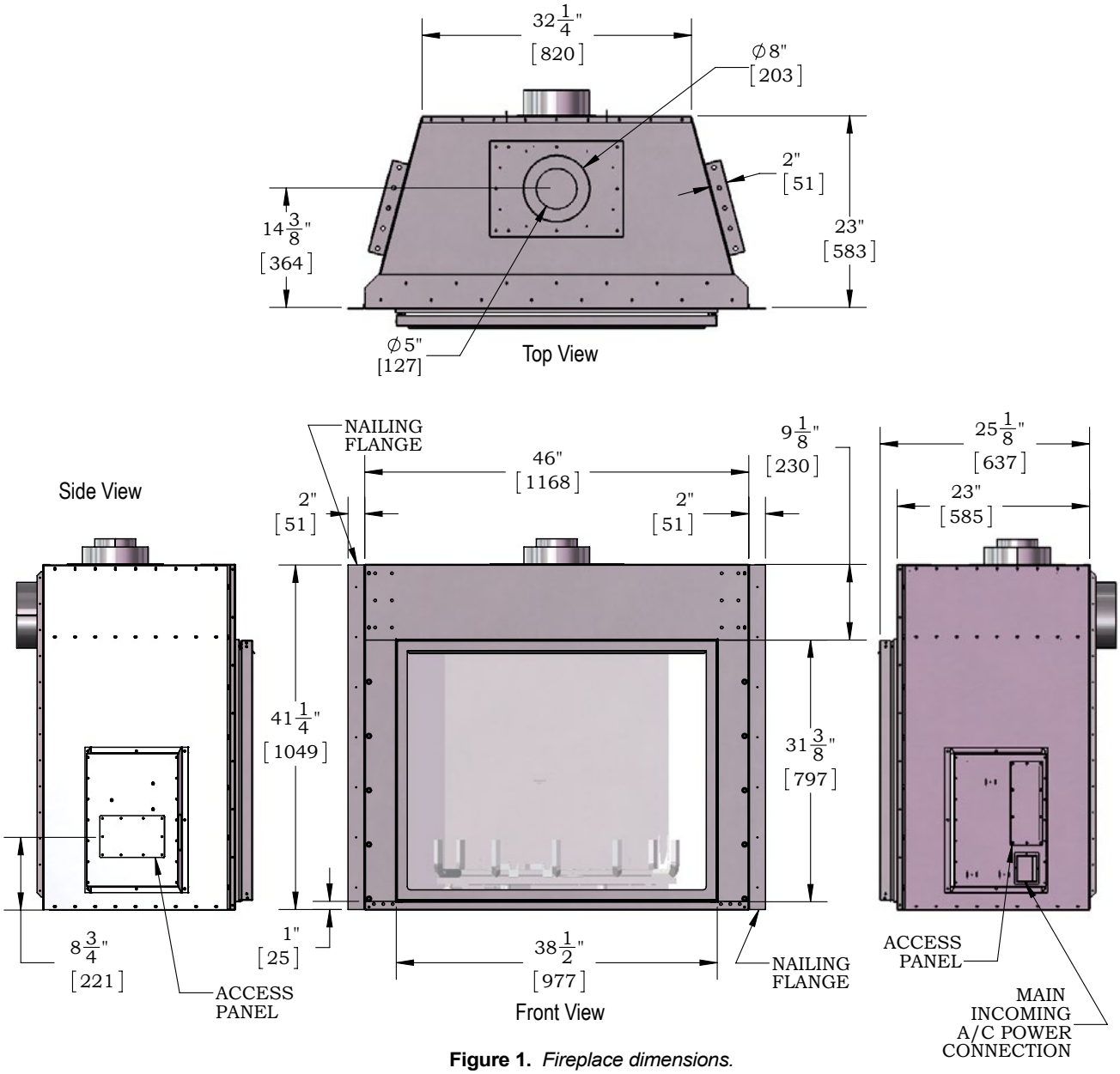

Figure 1. *Fireplace dimensions.*

Installation

Section 2: Framing

Step 1. To frame in the unit first frame a rough-in enclosure with combustible framing materials, using typical framing practices. The rough-in frame opening for the assembled fireplace is 46" wide, x 50" high x 24" deep. See Figure 2.

NOTE: When constructing the framed opening, please ensure that your combustible 2 x 4 header is at 50" minimum and that there is access to install the gas line when the unit is installed. See Figures 1 and 2a.

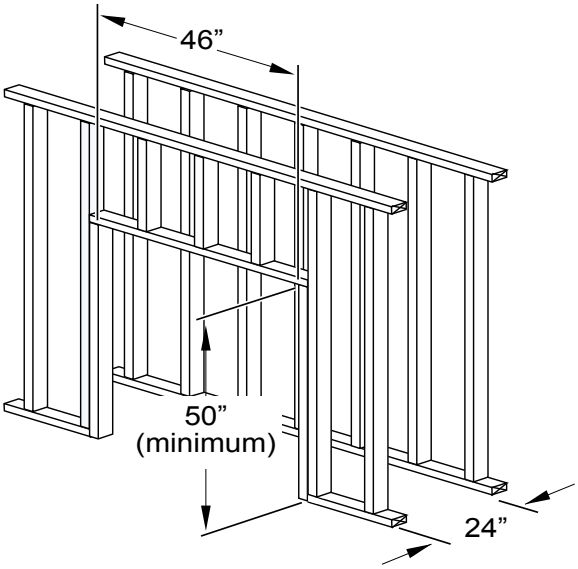

Figure 2. Fireplace installation (combustible frame dimensions)

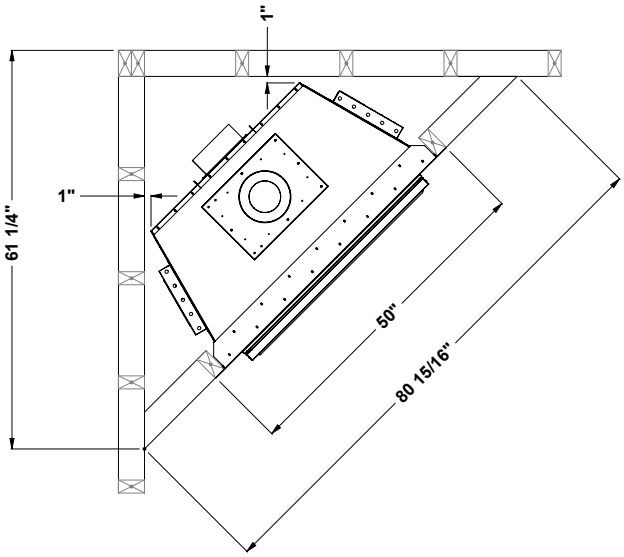

Figure 2.aa Fireplace corner installation (combustible frame dimensions)

Step 2. Place the Fireplace in the enclosure and install the Vent pipe, and Power Vent module. Next, Connect the Gas line and provide a gas service shut-off valve; according to local gas codes, then secure in place with 1/4" wood screws. Install supplied Non-combustible header at 45½" from floor.

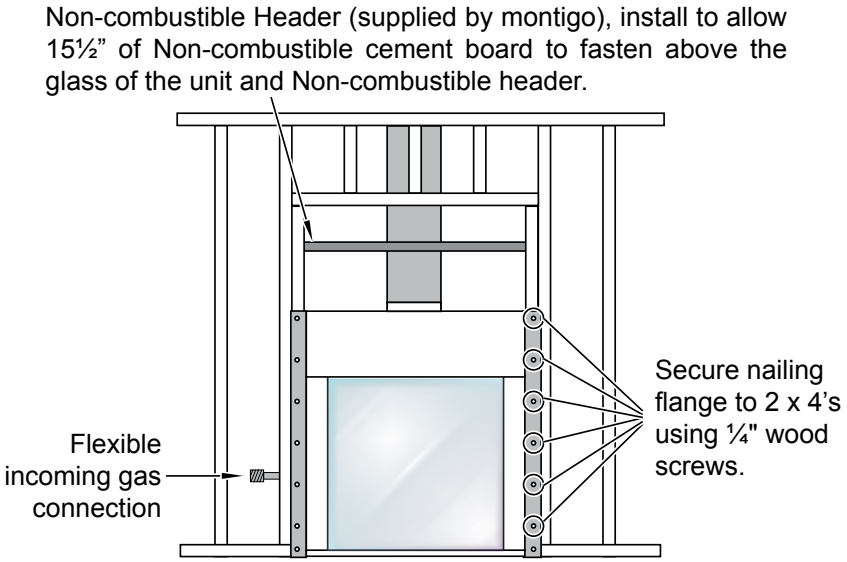

Figure 2a. Fireplace installation, (Inlet Gas & Power Vent) .

Note: Images are shown without screens for clarity purposes. However, your fireplace should not be operated without proper installation of screens.

Installation

Section 3: Finishing

Step 1. As shown in Figure 3; Use Non combustible Cement board, supplied by Montigo, screw to Non-combustible Header and 2 x 4's at sides of unit (see figure 2a on page 6) using sheet metal screws.

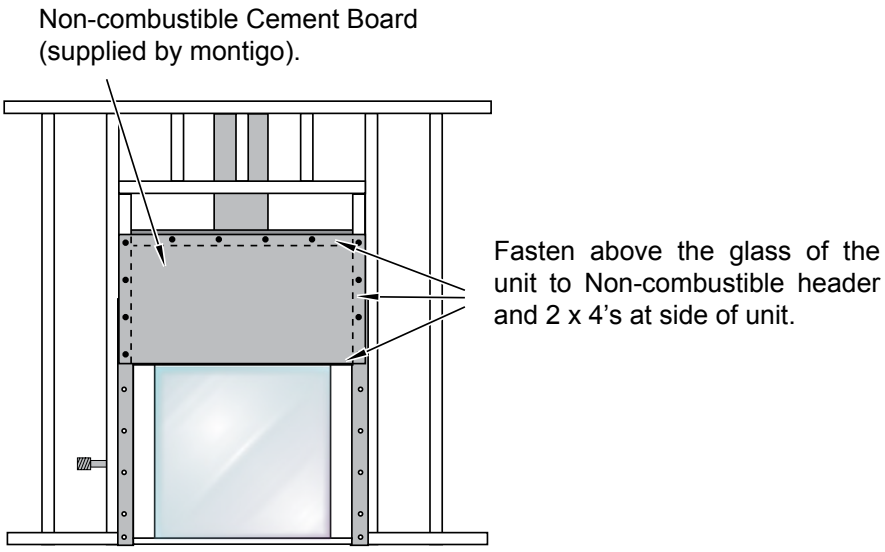

Figure 3. Non-combustible Cement Board the Fireplace, (supplied by Montigo).

Step 2. As shown in figure 3a; Cut standard Drywall / Wall board to complete the installation of fireplace surround.

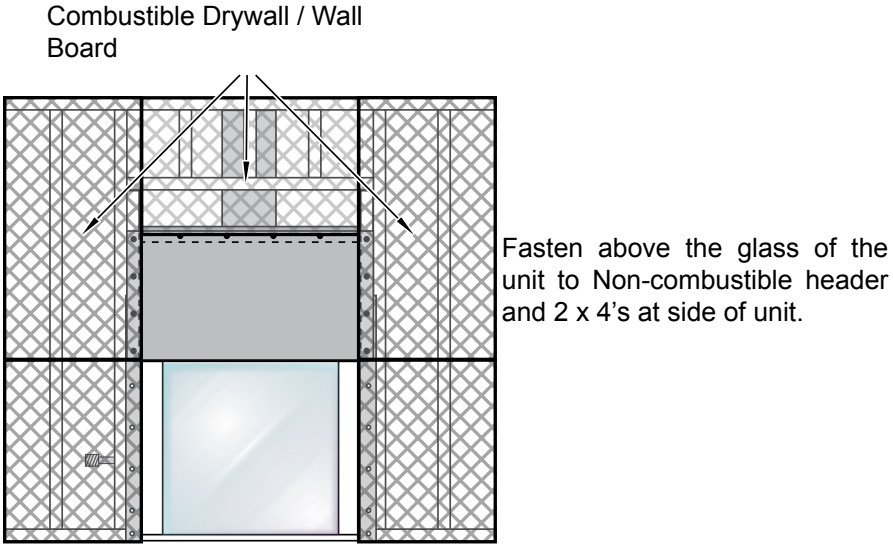

Figure 3a.

Note: Images are shown without screens for clarity purposes. However, your fireplace should not be operated without proper installation of screens.

Installation

Section 3: Finishing

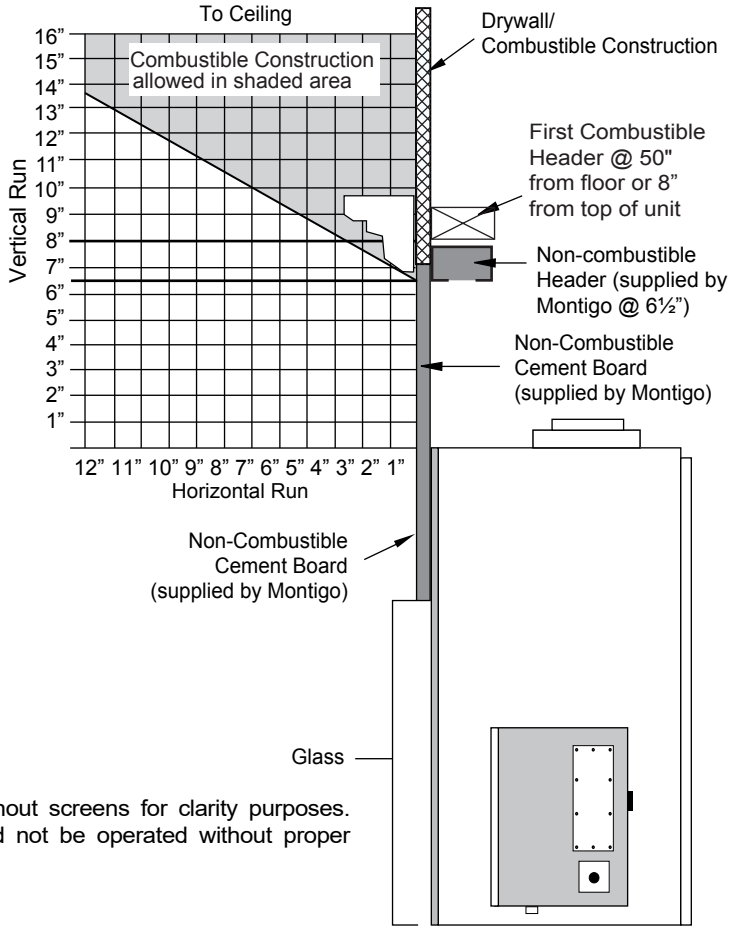

Note: Images are shown without screens for clarity purposes. However, your fireplace should not be operated without proper installation of screens.

Figure 3b. Combustible mantle and facings. (Not to scale)

Fireplace Facing

When selecting the finish material for your fireplace, it is important to remember the following:

If the surround of the fireplace is to be painted to match the room decor, heat-resistant paint must be provided . Also, decorative facing must not extend past the fireplace opening at all, because it will interfere with the access to retainers for removal of glass door and access to the lower compartment.

CAUTION

We recommend careful consideration be given to the effects of elevated mantel temperatures which may be in excess of product design, for example: candles, plastic or pictures. This can cause melting, deformation, discoloration or premature failure of T.V. radio, and other electronic components.

Mantels & Surrounds

National Canadian Gas Association mantel test requirements are for fire hazard prevention to combustible materials.

Please be aware; temperatures over the mantel will rise above normal room temperature and walls above fireplace may be hot to touch.

CAUTION

When covering the upper metal portion of the fireplace with a non-combustible material, please **Note:** The decorative facing materials may be subject to temperatures in excess of 250˚ F. This should be considered when selecting facing materials.

Installation

Section 4: Installing the Power Vent

Venting Installation

External Power Vent System must be used with a gas fireplace that is equipped with electronic ignition system. When installing the venting, the installation must adhere to the Vent Installation Section in the fireplace's Installation Operation and Maintenance Instructions, as well as the following guidelines:

- Ensure that the planned termination location is acceptable as shown in Appendix A.
- Maximum allowed vent run is 100 feet.

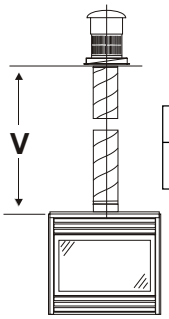

Max V	Max Elbows
100' feet	six 90

Figure 3.a *Typical Venting Installations.*

Multi-Elbow Installations

Multi-elbow installations are possible up to a maximum of six 90° elbows.

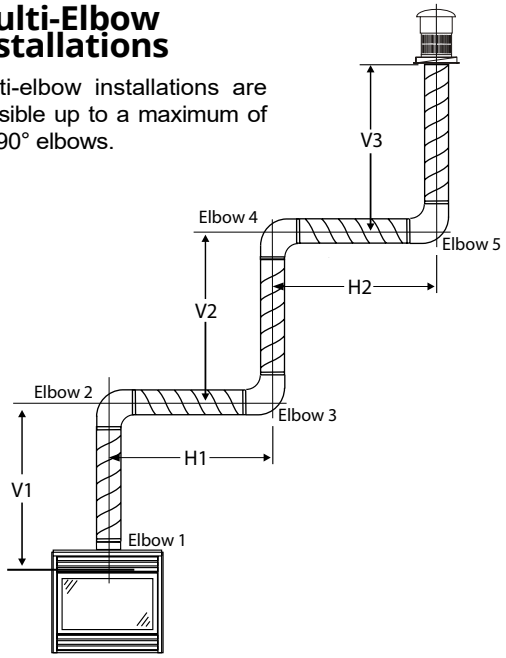

Max V1 + H1 + V2 + H2 + V3 + H3	Max Elbows
100' feet	six 90

Downward Vertical Venting

Downward venting installations are only possible with gas fireplaces equipped with electronic ignition system. Battery backup cannot be used with a power vent system.

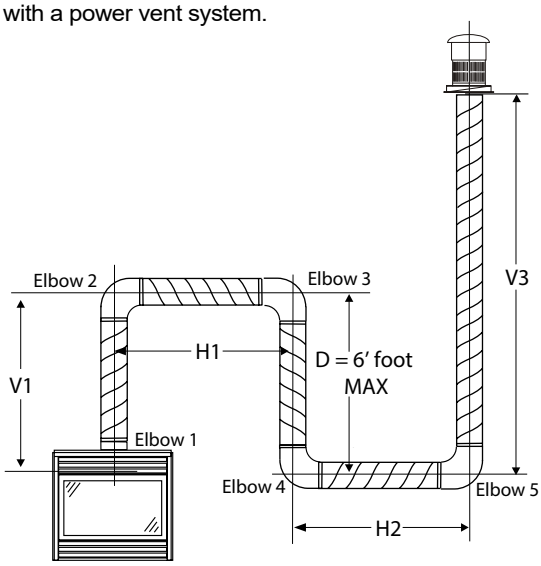

Max V1 + H1 + D + H2 + V3	Max Elbows
100' feet	six 90

Installing the Power Vent

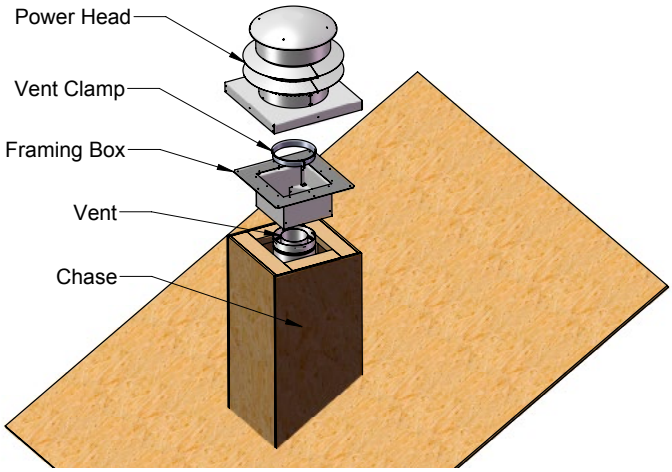

Figure 4b. Downward Venting Installations.

Installation

Venting Components

The following venting components and associated Montigo part numbers are available for the PVVEX47-200:

Termination & Fan Motor 4”/7” (Includes mounting frame)	PVVEX47-200
Flex Sections	MLF-1 (12" Section) MLF-2 (24" Section) MFL-3 (36" Section) MFL 4 (48" Section)
Rigid Sections	MEXT-1 (12" m/f Section) MXT-20 (20" Section) MEXT-2 (24" m/f Section) MEXT-3 (36" m/f Section) MEXT-4 (48" m/f Section)
Elbows	MEL-90MM (m/m 90º Elbow MEL-90FF (f/f 90º Elbow MEL-90FM (f/m 90º Elbow) MEL-45FM (f/m 90º Elbow)
Power Cord Harnesses	EPVH-10 foot power cord & harness EPVH-20 foot power cord & harness EPVH-40 foot power cord & harness EPVH-60 foot power cord & harness EPVH-80 foot power cord & harness EPVH-100 foot power cord & harness

Connection and installation of the vent components should adhere to the following guidelines:

- Use any combination of rigid and flex pipe as required and in any orientation (Male connectors can face in any direction).
- Flex sections may be stretched up to 50% of their total length (e.g. a 24” section maybe stretched to 36”).
- Ensure the pipe ends male to female slide in a minimum of 1 1/2” of overlap.
- Connect all vent sections using a minimum of three sheet metal screws on the outer and inner pipe flue.
- Ensure all runs are supported with a minimum of 3 supports per 10’ of venting.
- When hanging/ supporting venting, ensure that 1” clearance is maintained on sides and bottom of vent runs and 2” above horizontal vent runs to any combustible material.
- Rigid pipe may be cut less than half way from the **female end only.**
- Ensure when cutting sections of rigid pipe to maintain integrity of internal supports.
- Place the springs, supplied with the pipe kit, between the outer and inner pipes to keep the pipes separate and avoid any possible hot spots.
- Montigo recommends the use of a flex section for the final pipe connected directly to the fireplace offering greater flexibility of installation and absorption of movement.
- Firestops must be installed as required by National & local codes.
- When passing vent pipe through a wall use a heat shield.
- Montigo recommends that all exterior corners and joints be sealed with exterior caulking. However, we encourage you to consult your Building Envelope Engineer or Waterproofing Consultant for further recommendations.

Refer to Appendix A - Power Vent locations, to ensure the planned Vertical Power vent location is acceptable.

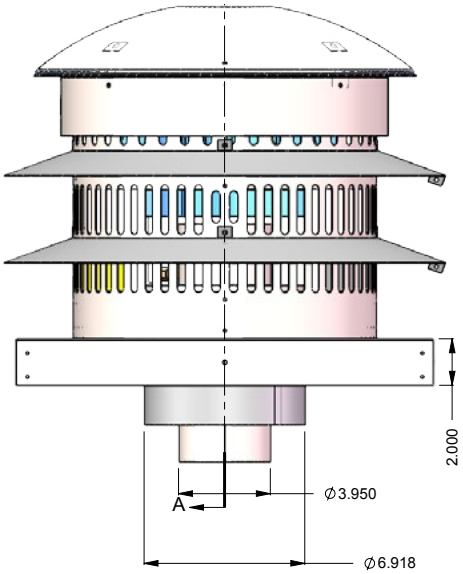

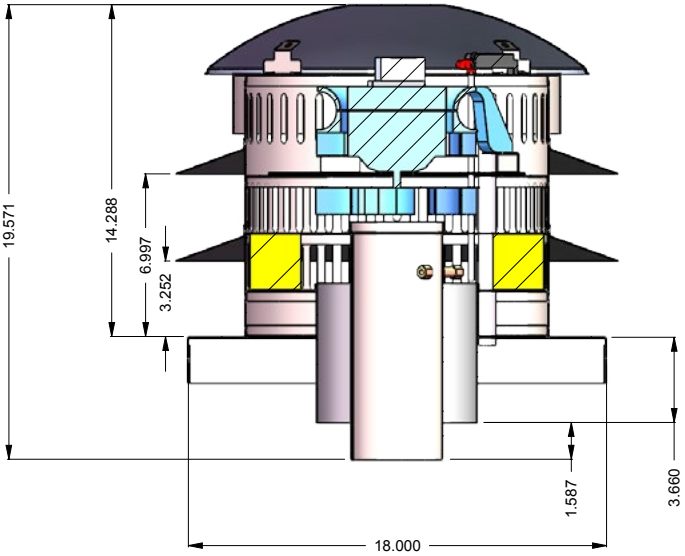

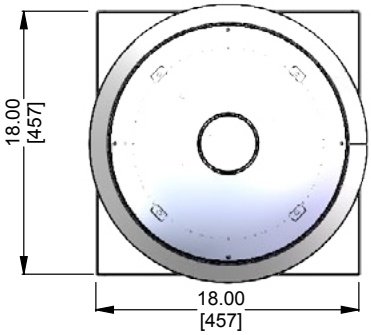

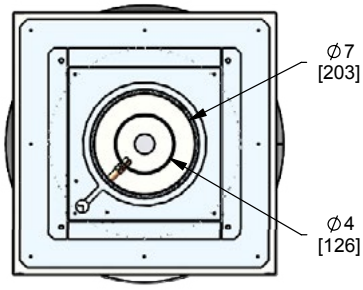

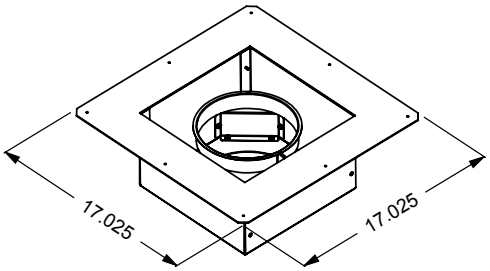

EDVRSPVF47

Installation

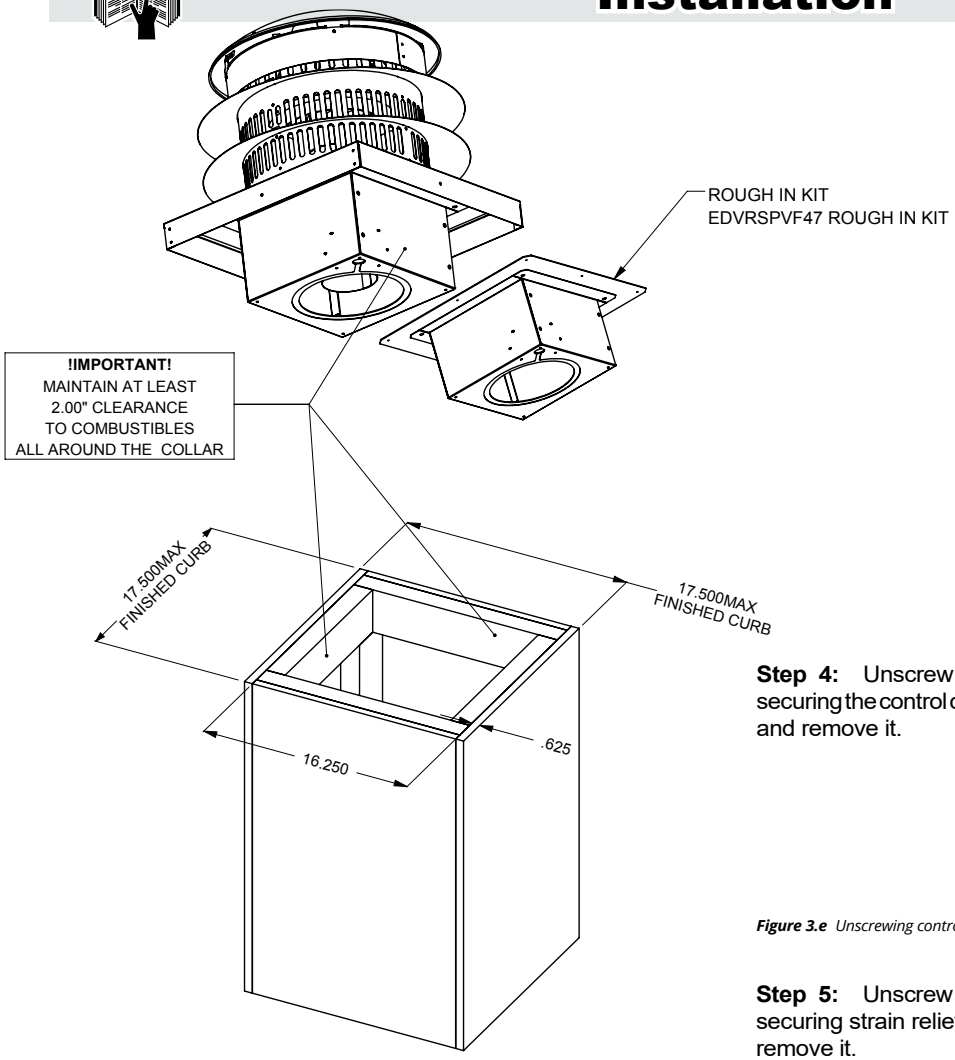

Step 1: Construct a chase box around the vent penetration with dimensions as shown.

Step 2: Install the electrical harness (EPVH-10-100) that will communicate with the Power Vent. Run vent pipe from the fireplace to the chase. Make sure the last section is female end up and is flush with the top of the chase without going above it.

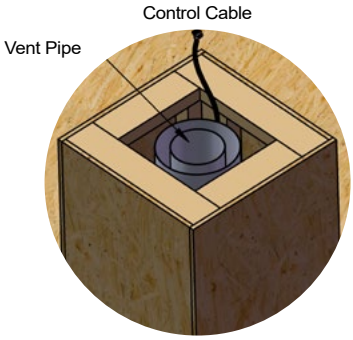

Figure 3.c *Installing the Rough-in Kit.*

Step 3: Remove the last section of vent pipe and put off to the side to be used later.

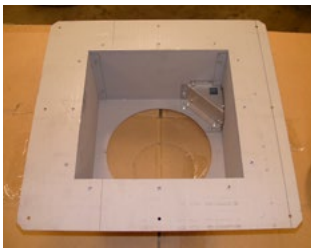

Step 4: Unscrew 6 screws securing the control cable cover and remove it.

Figure 3.e *Unscrewing control cable cover*

Step 5: Unscrew 2 screws securing strain relief plate and remove it.

Figure 3.f *Removing strain relief plate.*

Step 6: Loosen nut on the strain relief of the control cable. Pass control cable through slot in rough in box making sure the nut stays is on the opposite side of the rough in box as the strain relief. Push the strain relief through the hole in the roughin box.

Figure 3.g

Step 7: Reinstall the strain relief plate. Make sure the strain relief nut is above the strain relief plate. Tighten the nut on the strain relief.

Installation

Step 8: Push the molex connector of the control cable through the hole in the control cable cover. Make sure the molex clicks in place so it does not fall out. Screw control cable cover back in place.

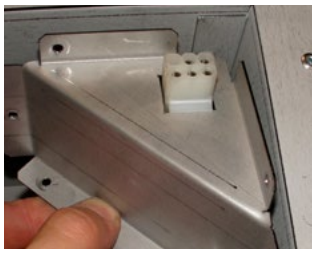

Figure 3.i

Step 9: Drop the rough in box over top of and inside the Chase.

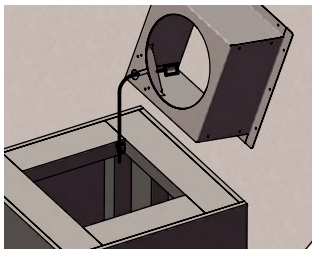

Figure 3.j

Step 10: Take the last section of pipe and install the vent clamp around the pipe. The bottom of the band should be 6 3/8" from the top of the pipe. Tighten the clamp using the supplied nut and screw.

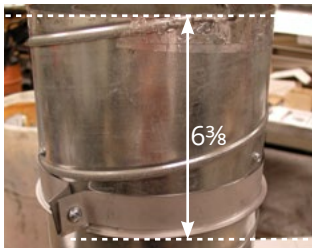

Figure 3.k

Step 11: Drop pipe down into the frame box. The pipe should be flush with the top of the frame box. Secure pipe connection below.

Figure 3.l

Step 12: Connect power cable of termination to the molex of the control cable.

Figure 3.m

Step 13: Place power vent over chase and fasten with 4 screws on the vertical sides of the base plate. Silicone of seal the base plate in any location necessary to keep the structure of the building free of water or moisture.

Figure 3.n

Conduit and Wiring Clearances

Connect the power vent harness as outlined. Connect the wiring to the fireplace as outlined in the schematic showin in Figure 14 Section 3. Ensure that the proper clearances are maintained for the wiring and conduit. When installing the wiring, it must never run above the vent pipe and it must be at lest 1" clear of all venting and other hot surfaces.

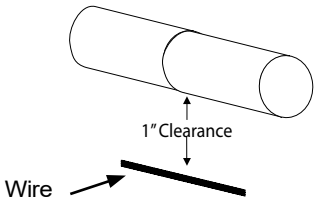

Power Vent Wiring

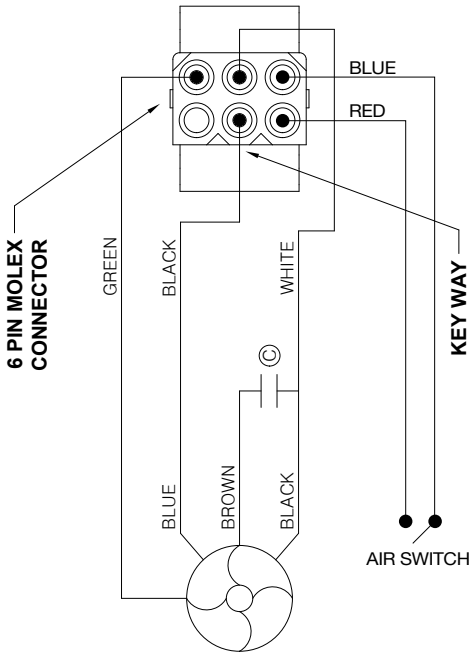

Installation

Venting Installation

External Power Vent System must be used with a gas fireplace that is equipped with electronic ignition system. When installing the venting, the installation must adhere to the Vent Installation Section in the fireplace's Installation Operation and Maintenance Instructions, as well as the following guidelines:

- Ensure that the planned termination location is acceptable as shown in Appendix A.
- Maximum allowed vent run is 80 feet.

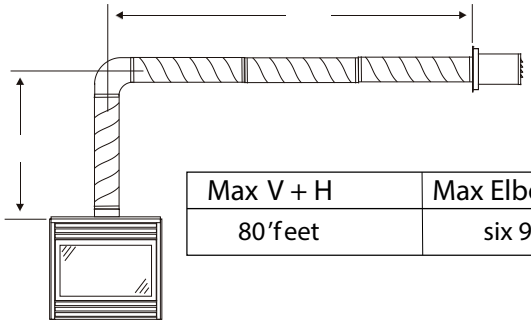

Max V + H	Max Elbows
80'feet	six 90

Figure 3.a *Typical Venting Installations.*

Multi-Elbow Installations

Multi-elbow installations are possible up to a maximum of six 90° elbows.

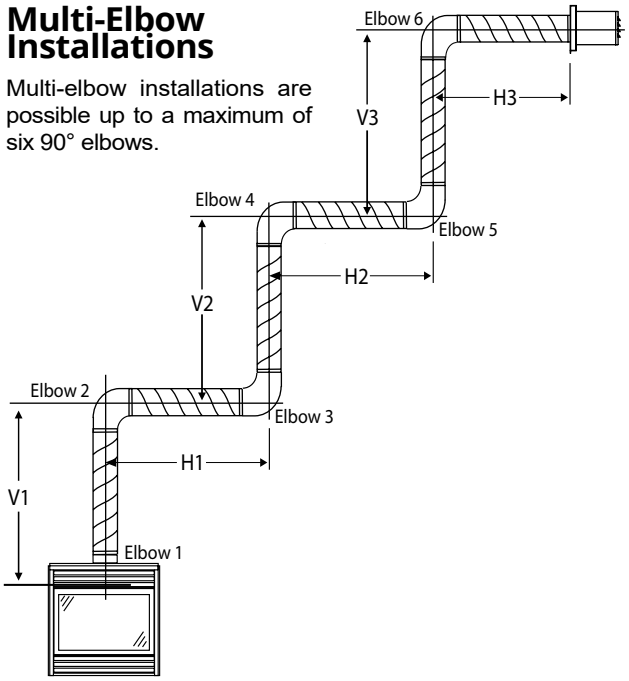

Max V1 + H1 + V2 + H2 + V3 + H3	Max Elbows
80' feet	six 90

Downward Vertical Venting

Downward venting installations are only possible with gas fireplaces equipped with electronic ignition system.

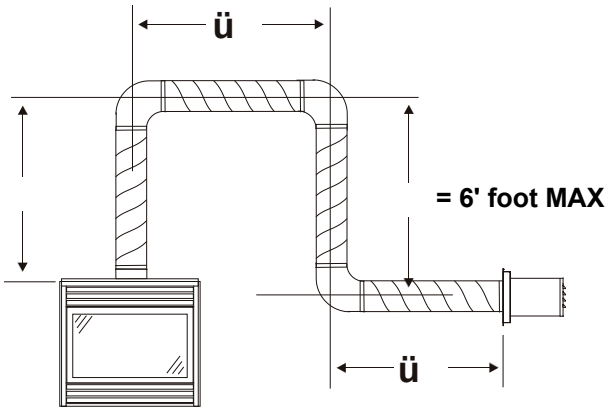

Max V1 + H1 + D + H2	Max Elbows
40 ' feet	six 90

NOTE: Vent run for downward venting installations allows a maximum of 40 feet including downward vent section. Maximum downward vent section allowed is 6 feet.

Installation

Venting Components

The following venting components and associated Montigo part numbers are available for the PVHEX47-200:

Termination & Fan Motor 4”/7” (Includes mounting frame)	PVHEX47-200
Flex Sections	MLF-1 (12" Section) MLF-2 (24" Section) MFL-3 (36" Section) MFL 4 (48" Section)
Rigid Sections	MEXT-1 (12" m/f Section) MXT-20 (20" Section) MEXT-2 (24" m/f Section) MEXT-3 (36" m/f Section) MEXT-4 (48" m/f Section)
Elbows	MEL-90MM (m/m 90º Elbow MEL-90FF (f/f 90º Elbow MEL-90FM (f/m 90º Elbow) MEL-45FM (f/m 90º Elbow)
Power Cord Harnesses	EPVH-10 foot power cord & harness EPVH-20 foot power cord & harness EPVH-40 foot power cord & harness EPVH-60 foot power cord & harness EPVH-80 foot power cord & harness EPVH-100 foot power cord & harness

Connection and installation of the vent components should adhere to the following guidelines:

- Use any combination of rigid and flex pipe as required and in any orientation (Male connectors can face in any direction).
- Flex sections may be stretched up to 50% of their total length (e.g. a 24” section maybe stretched to 36”).
- Ensure the pipe ends male to female slide in a minimum of 1 1/2” of overlap.
- Connect all vent sections using a minimum of three sheet metal screws on the outer and inner pipe flue.
- Ensure all runs are supported with a minimum of 3 supports per 10’ of venting.
- When hanging/ supporting venting, ensure that 1” clearance is maintained on sides and bottom of vent runs and 2” above horizontal vent runs to any combustible material.
- Rigid pipe may be cut less than half way from the **female end only.**
- Ensure when cutting sections of rigid pipe to maintain integrity of internal supports.
- Place the springs, supplied with the pipe kit, between the outer and inner pipes to keep the pipes separate and avoid any possible hot spots.
- Montigo recommends the use of a flex section for the final pipe connected directly to the fireplace offering greater flexibility of installation and absorption of movement.
- Firestops must be installed as required by National & local codes.
- When passing vent pipe through a wall use a heat shield.
- Montigo recommends that all exterior corners and joints be sealed with exterior caulking. However, we encourage you to consult your Building Envelope Engineer or Waterproofing Consultant for further recommendations.

Refer to Appendix A - Power Vent locations, to ensure the planned Vertical Power vent location is acceptable.

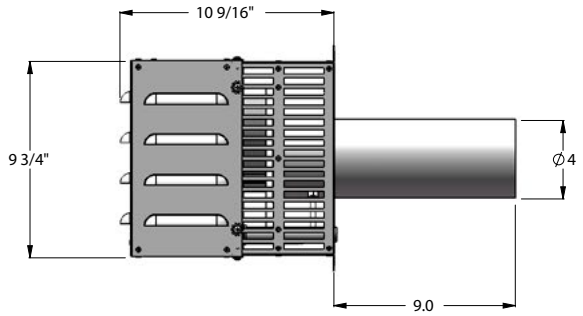

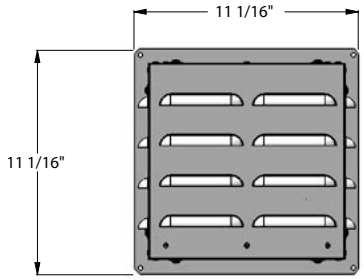

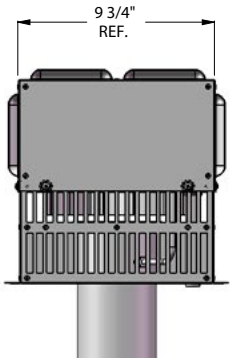

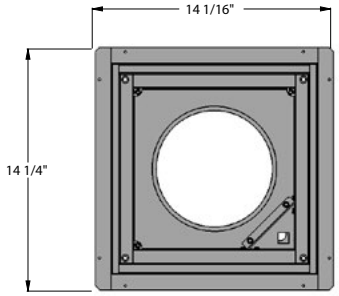

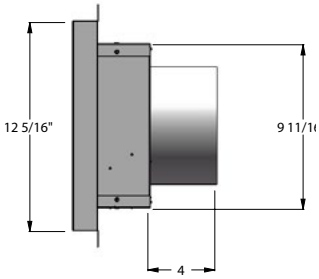

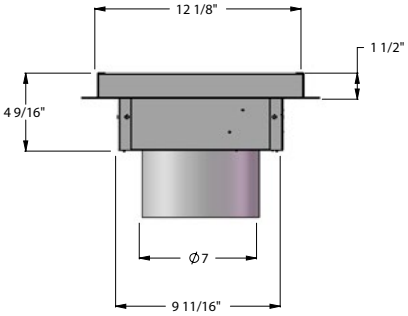

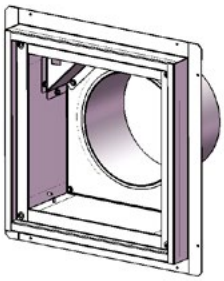

Installation

Installing the Power Vent

Selecting A Termination Location

Before installing the termination, ensure that the proper air flow restrictor is installed as shown, and check to ensure the planned termination location is acceptable. For a detailed illustration of allowed termination locations, see Appendix A.

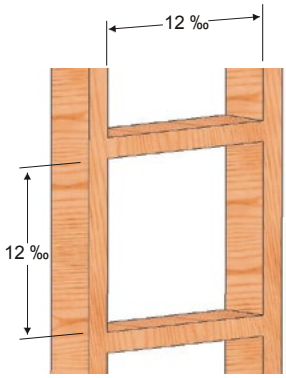

Installing the External PV Termination

Step 1. Construct a frame for the termination opening to 12½" x 12½"

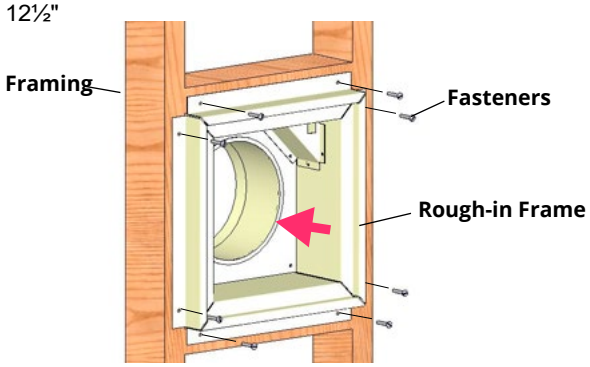

Figure 4.a *Framing the Opening for Power Vent*

Step 2: Insert the Power Vent Rough-in Box as shown in Figure 4.a. Fasten the Box securely in place with Screws or nails, Figure 4.a. Apply exterior sheathing and finishing if required. (Figure 4.b).

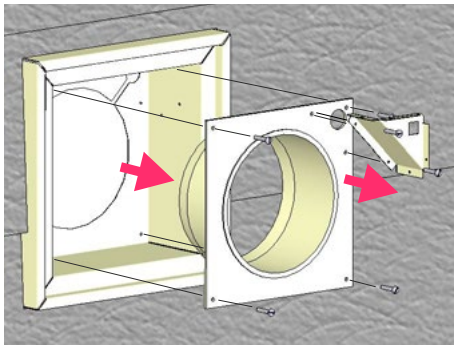

Figure 4.b *Installation of Rough-in Kit*

Step 3: Next, remove the bottom collar and conduit mounting frame as shown Figure 4.b. (Place removed hardware in a handy location for re-assembly).

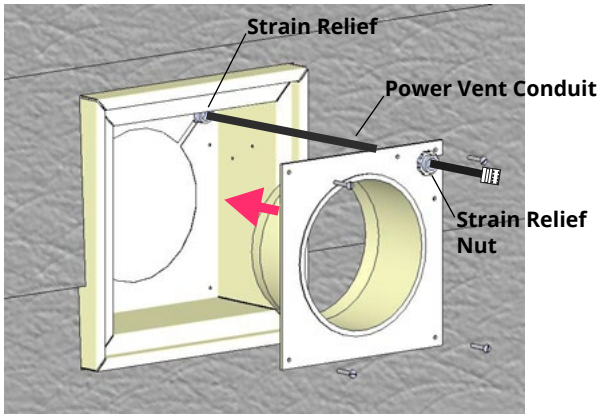

Figure 4.c *Installation of Power Vent Conduit*

Step 4: Insert the conduit from the Power Vent Module into the rough-in frame through the two top right entry holes. Remove the nut from the supplied strain relief and place as shown, Figure 4.c.

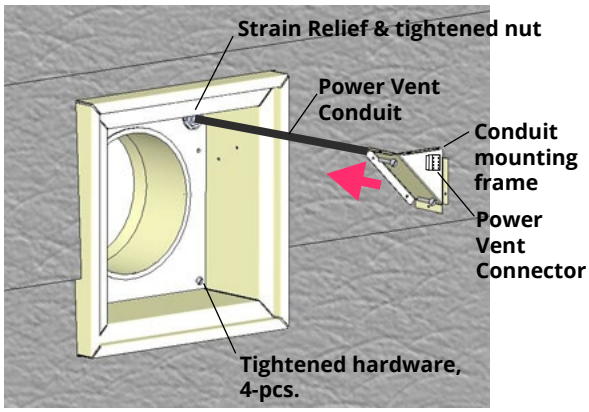

Figure 4.d *Installing Conduit connector & conduit mounting frame*

Step 5: Securely fasten bottom Collar pan into the Rough-in frame using the existing hardware, (4-pcs). Tighten Strain Relief nut onto Strain relief.

Step 6: Pull Power Vent Connector, (from behind) half-way through supplied hole in conduit mounting frame, and snap into place, (notches in two plastic wing clips. Orientation not critical).

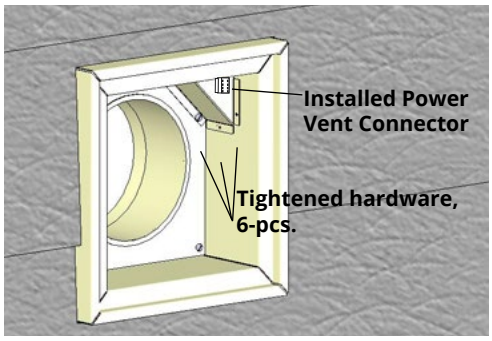

Figure 4.e *Assembled Rough-in Kit*

Step 7: Fasten Conduit mounting frame into place using existing hardware, (6-pcs). (Coil conduit in behind cover.)

Installation

Step 8: Install the Power Vent Power / communication harness. Hold the Power Vent in close proximity of the assembled Rough-in Kit, and plug in the Power Vent communication / Power Cord. (Note the direction and orientation of the pins inside the Power Vent connector, snap together). (Figure 4.e).

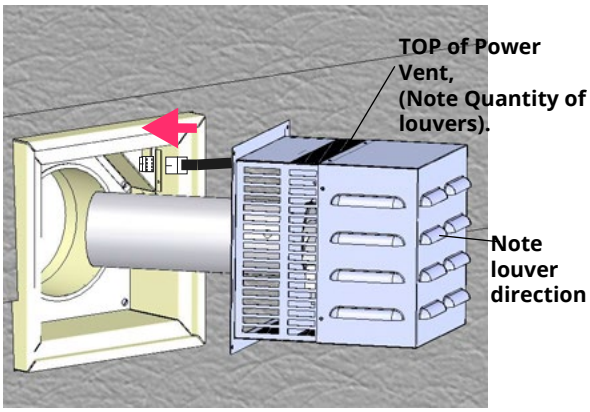

Figure 4.f *Installation of Power Vent communication harness*

Step 9: Install the Power Vent. Place the Power Vent into the Rough-in frame, aligning the Power Vent into final position. Ensure the Harness is placed down in the Rough-in box when placing the Power Vent. (Secure the Power Vent in Place with the supplied hardware).

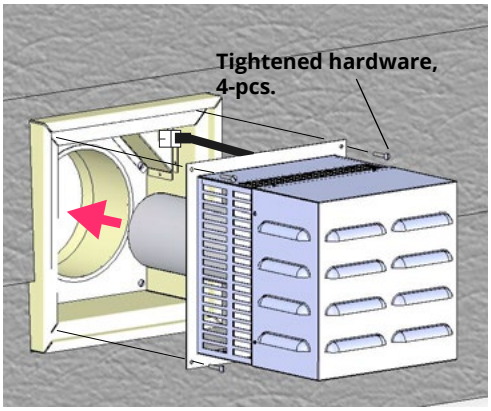

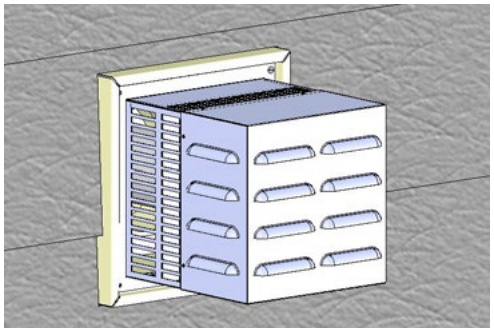

Figure 4.g *Completed Installation of Power Vent*

Wiring Installation

Connect the wiring to the external power vent termination as outlined in the previous section, and connect the wiring to the fireplace as outlined in the schematic below. Ensure that the proper clearances are maintained for the wiring and conduit.

- When installing the wiring it must never run above the vent run and it must be at least 1" clear of all venting.

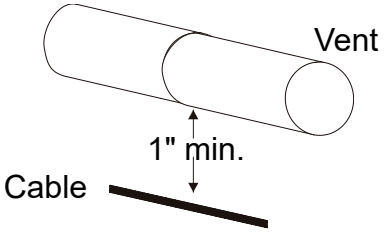

WARNING

Montigo will not be held responsible for any water damage that may occur from not installing the equipment as specified by this document.

Installation

Installing an In-Line Linear Power Vent (LDVPV58)

This section applies to installations where an external roof or wall mounted power vent is not aesthetically acceptable or feasible.

Venting Layout

Selection of components and details of venting lay out should adhere to the following guidelines:

- Ensure there is a minimum run of 2' of straight pipe between the fireplace and the power vent
- Ensure the maximum vent run does not exceed 60'
- Maximum vent run must be reduced by 10' for 1' of pipe running in a vertical downward direction
- Ensure the number of 90º elbows does not exceed 3 (maximum allowable vent run must be reduced by 10' for every additional 90º elbow added)
- Ensure the number of 45º elbows does not exceed 6

Linear Power Vent - Horizontal Termination

Example A. Vertical mounting with horizontal termination

Venting Installation		
Maximum Vent Run	**Minimum Vent Run****	**Max. # Elbows**
60 Feet	2 Feet	3

** from fireplace to in-line power vent

Maximum allowable vent run must be reduced by ten feet (10'-0" for every additional 90° elbow added. With a snorkel Termination, reduce the total vent run by an additional twenty feet (20'-0"). ***Figure's 7 and 7a***.

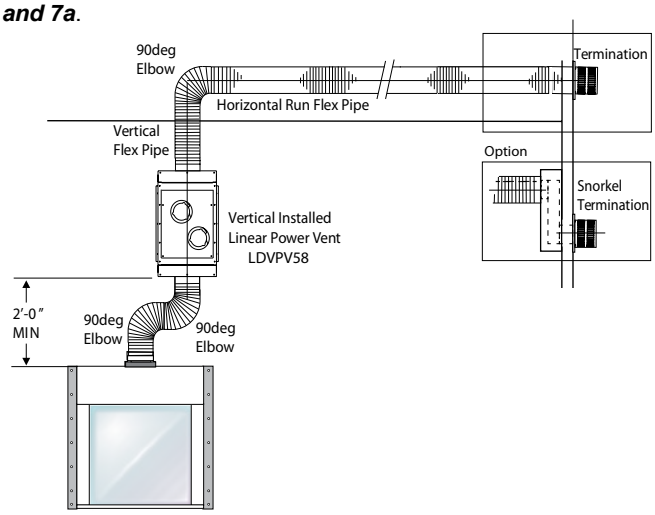

Figure 7. *Vertical Mounting for the Linear Power Venter*

Example B. Horizontal mounting with horizontal termination

Venting Installation		
Maximum Vent Run	**Minimum Vent Run****	**Max. # Elbows**
60 Feet	2 Feet	3

** from fireplace to in-line power vent

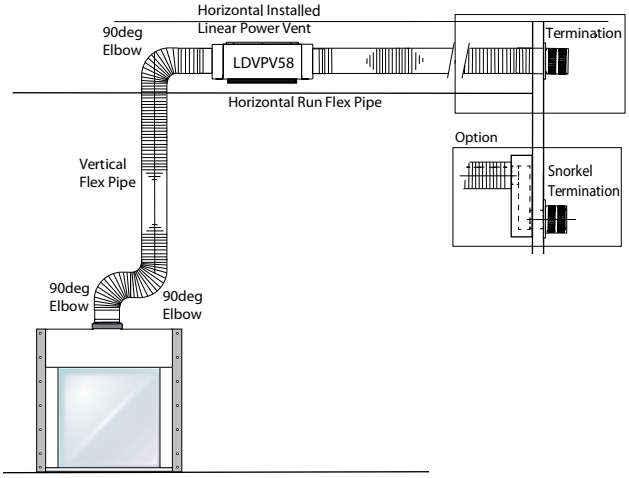

Figure 7a. Horizontal Vent for the Linear Power Venter.

Example C. Horizontal mounting with downward vent run and horizontal termination

Venting Installation		
Maximum Vent Run	**Minimum Vent Run****	**Max. # Elbows**
40 Feet	2 Feet	3

** from fireplace to in-line power vent

Maximum allowable vent run must be reduced by ten feet (10'-0") for every additional 90° elbow added. Also, deduct ten feet (10'-0") of vent length for every one foot (1'-0") of vent run traveling in a downward direction.

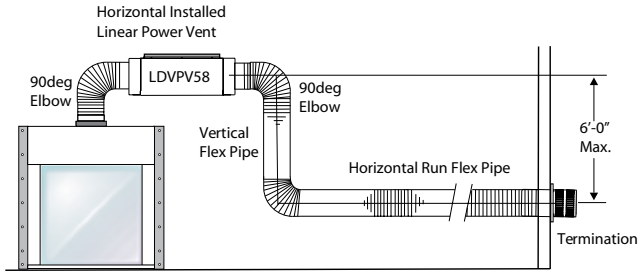

Figure 7b. *Horizontal Linear Power Vent with Downward vent and Horizontal Vent Run to Termination.*

⚠ CAUTION

- Vent terminations can be very hot. The termination is to be installed higher than 7 feet above a public walkway.
- Do not obstruct, or attempt to conceal, the vent termination. These actions will affect the operation of the fireplace, and may be hazardous.
- In heavy snow areas, take extra care to prevent snow buildup from obstructing the vent termination.

WARNING

All venting material must be Montigo flex pipe, with as few joints as possible. All joints use MVA vent splice. Montigo will not be held responsible for any water damage that may occur from not installing the equipment as specified by this document.

Note: Images are shown without screens for clarity purposes. However, your fireplace should not be operated without proper installation of screens.

Installation

Venting Components

The following venting components and associated Montigo part numbers are available for the LDVPV58:

A - Termination	DVPV58
B - Power Vent	LDVPV58
C - Control Module	RHSIT05
D - Flex Sections	PFL-1 (12" Section) PFL-2 (24" Section) PFL-3 (36" Section) PFL-4 (48" Section)
E - Rigid Sections	PEXT - 1 (12" m/f Section) PXT-20 (20" section) PEXT - 2 (24" m/f Section) PEXT - 3 (36" m/f Section) PEXT - 4 (48" m/f Section)
F - Elbows	PEL-90MM (m/m 90° Elbow) PEL-90FF (f/f 90° Elbow) PEL-90FM (f/m 90° Elbow) PEL-45FM (f/m 45° Elbow)
G - Power Cord Harnesses:	EPVH10 -10 foot power cord and harness EPVH20 -20 foot power cord and harness EPVH30 -30 foot power cord and harness EPVH40 -40 foot power cord and harness EPVH50 -50 foot power cord and harness EPVH60 -60 foot power cord and harness EPVH70 -70 foot power cord and harness EPVH80 -80 foot power cord and harness EPVH90 -90 foot power cord and harness EPVH100 -100 foot power cord and harness

Connection and installation of the vent components should adhere to the following guidelines:

- Connect all vent sections using a minimum of three sheet metal screws on the outer pipe flue.
- Ensure the pipe ends male to female slide in a minimum of 1 1/2" of overlap.
- Ensure all runs are supported with a minimum of 3 supports per 10' of venting.
- When hanging/supporting venting, ensure that 1" clearance is maintained on all sides to any combustible material.
- Ensure when cutting sections of rigid pipe to maintain integrity of internal supports.
- Place the springs, supplied with the pipe kit, between the outer and inner pipes to keep the pipes separate and avoid any possible hot spots.
- Montigo recommends the use of a flex section for the final pipe connected directly to the fireplace offering greater flexibility of installation and absorption of movement.

Note: Images are shown without screens for clarity purposes. However, your fireplace should not be operated without proper installation of screens.

Installation

Installation of the LDVPV58 power vent module:

1. The linear power vent can be installed to existing stud construction or directly to cement wall or roof. The **LDVPV58** must maintain the clearance to combustibles as shown in ***Figure 9a***. The required service access panel must be framed at 28" X 18". To enclose the service access panel, (at less than 2") a minimum 30% free air must be supplied at all times.
2. Plug the power cord into the available slot in the linear power vent.
3. Secure all venting joints with at least three screws and ensure that the joints are properly sealed.

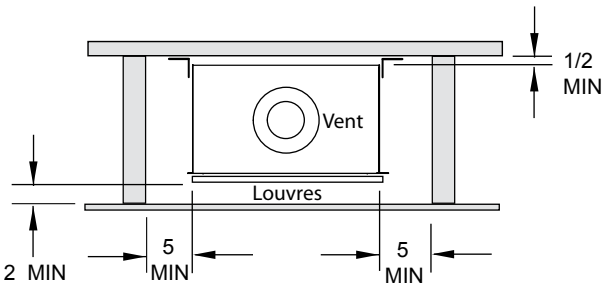

Figure 9b. ***LDVPV58*** *Power Vent framing dimensions.*

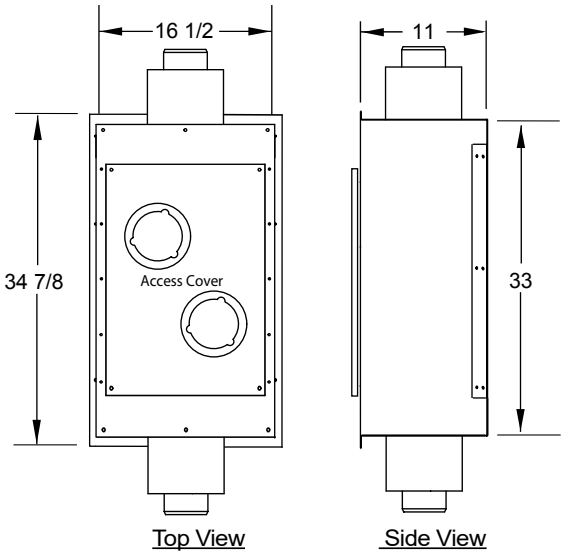

Figure 9. ***LDVPV58*** *Power Vent overall dimensions.*

Framing Dimensions

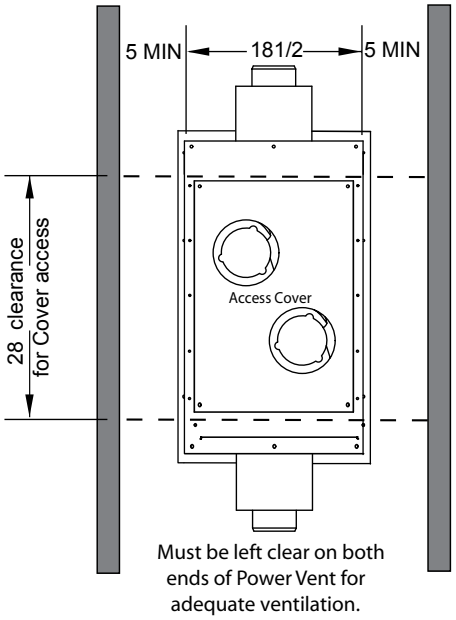

Figure 9a. ***LDVPV58*** *Power Vent framing dimensions.*

Recessed Termination Installation (VLWB-8) Refer to Appendix A - Termination locations

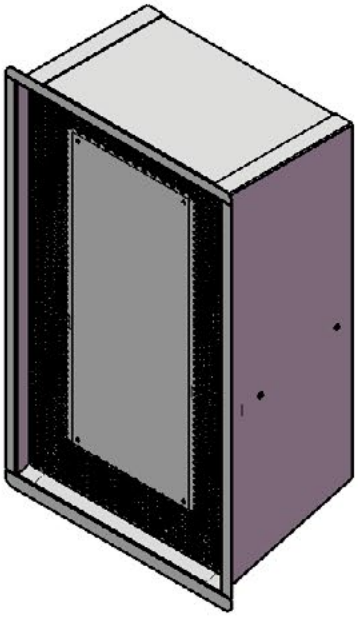

The VLWB-8 termination is designed to be installed flush with the exterior of the building. This recessed design uses 5"/8" vent and allows the installation to be clean and flush so it does not interfere or have an impact with your architectural design.

Figure 10. *Linear Power Vent recessed Termination.*

NOTE:

The **H36PVN** requires a specific volume of atmospheric interchange to operate properly and efficiently

- The fireplace requires a MIN 80in/sq. air movement to function.
- The grille must also be able to shed water, not allowing any moisture to enter the unit.

Installation

Section 5: Wiring

The Fireplace A/C power and Power Vent harness's must be installed before completing the installation of the **H36PVN** Fireplace. These connections are made from the RH-Side of the fireplace, ***Figure 12*** through ***Figure 12f***.

Figure 12. Incoming A/C Power , (connect per. Local Codes).

Install the Power Vent connections as described below:

Step 1. Remove the exterior Access cover, shown ***Figure 12a***.

Figure 12a. Remove Exterior Access Cover.

Step 2. Locate all the Power vent connections & ports, ***Figure 12b***.

Figure 12b. Locate Power vent connections.

Note: To access the fireplace electrical connections from the firebox follow the procedures described in *figure 22 through 26*.

Step 3. Remove the Power Vent communication port cover from cabinet, (as supplied) ***Figure 12c***. (***Philips head screwdriver required***).

Step 4. Place the cover plate on the Conduit, then tighten the strain relief nut onto the threads protruding through backside of cover plate, ***Figure 12e***.

Installation

Step 5. Route the Power Vent Comunication conduit into the cover as shown, and connect to the communication Port, ***Figure 12d***.

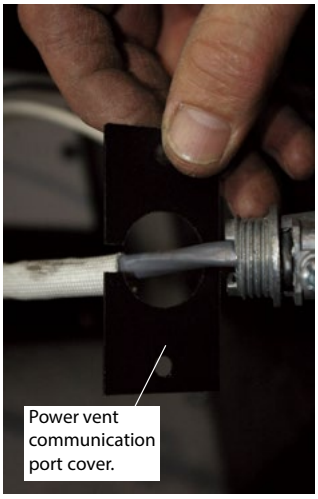

Figure 12c. Remove Exterior Access Cover.

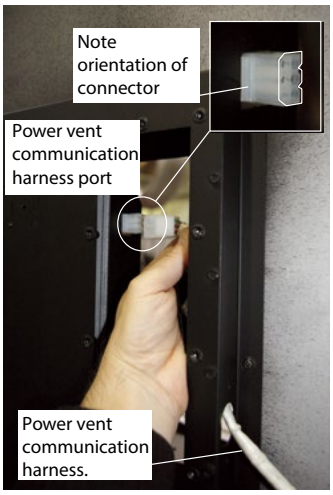

Figure 12d. Locate Power vent connections.

Note orientation of conduit plug into the Port, *(flat side / notches)***.**

Step 6. Re-Install the communication harness Port cover, ***Figure 12e***. ***(Philips head screwdriver required)***.

Step 7. Tighten Power Vent Strain relief adjustmsent screw, Figure 12e.

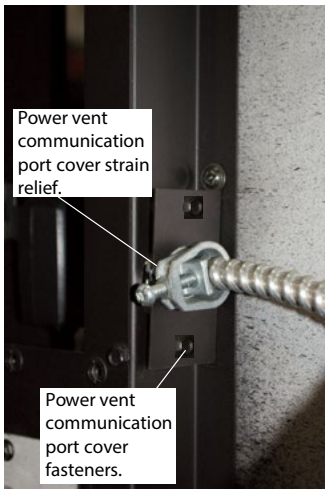

Figure 12e. Installing Conduit Port Cover Plate.

Installing The Remote Switch

The **H36PVN's** Remote LVT (Low Voltage) Switch conduit is located on the RH Side of the fireplace.

Note: The switch location must not exceed 30' from the fireplace.

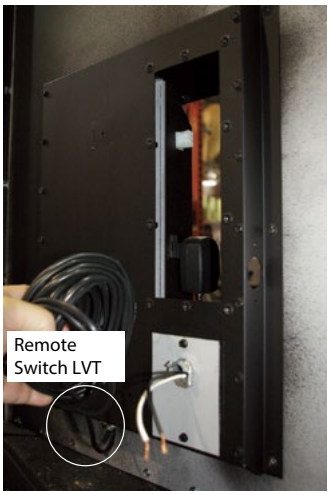

Figure 12f. Installing the Remote LVT Switch.

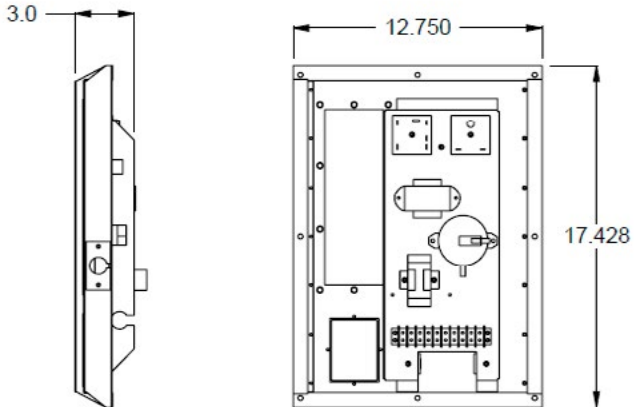

Figure 12g. Electrical Enclosure Dimensions

Installation

WARNING

If the information in these instructions is not followed exactly, a fire or explosion may result causing property damage, personal injury or death.

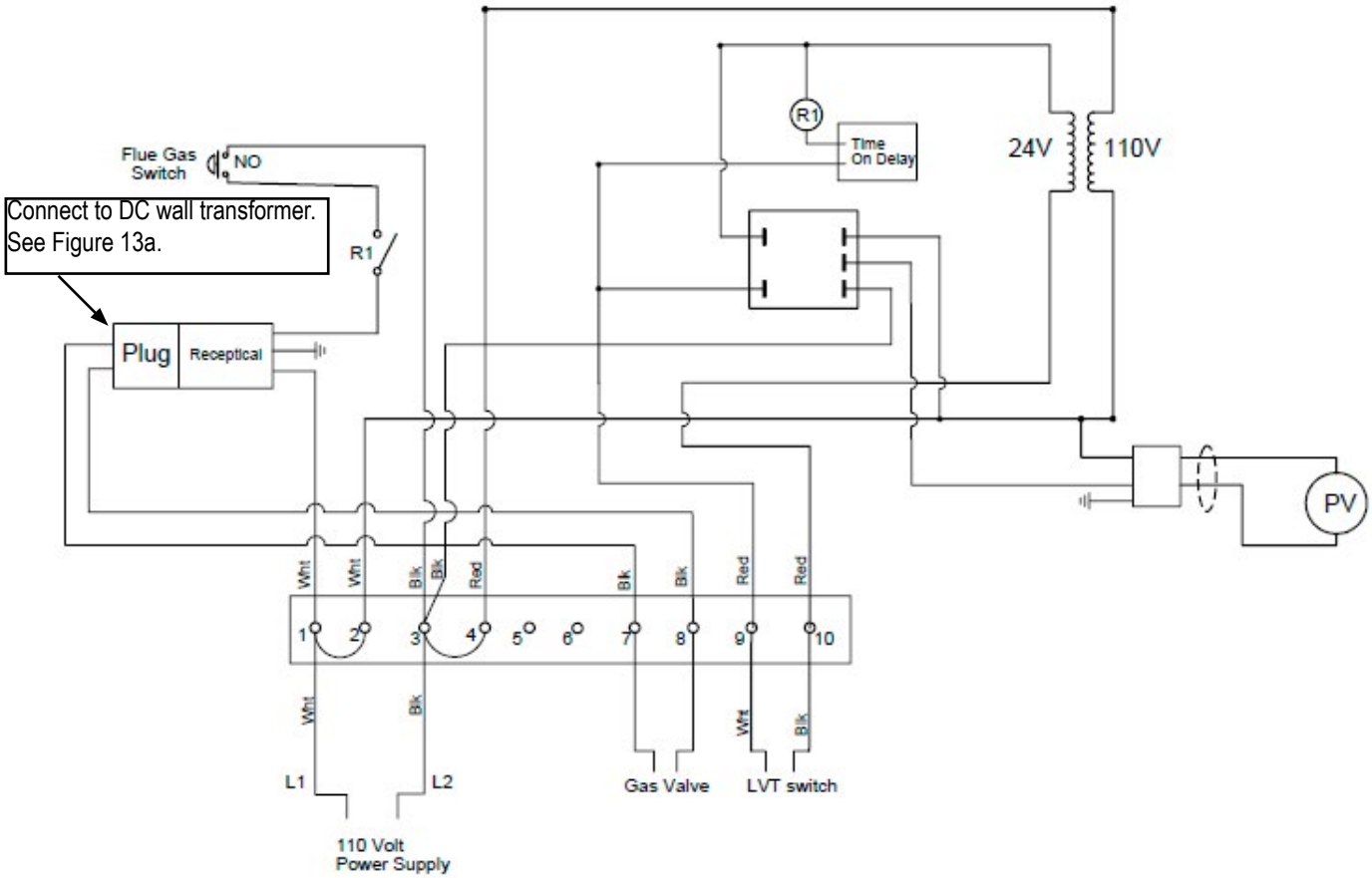

Figure 13. Wiring schematic for the H36PVN.

Inventory:

QTY	Description	Part Number
1	Socket, Relay	EC1214
1	Relay, 24VAC W/LED	EC1213
1	Transformer, 120V 60HZ 24V @ 40VA	EC1142
1	Terminal Block 10 Pole	EC1203
1	Control, Adjustable Timer Delay	EC1035
1	Time on Delay	

Installation

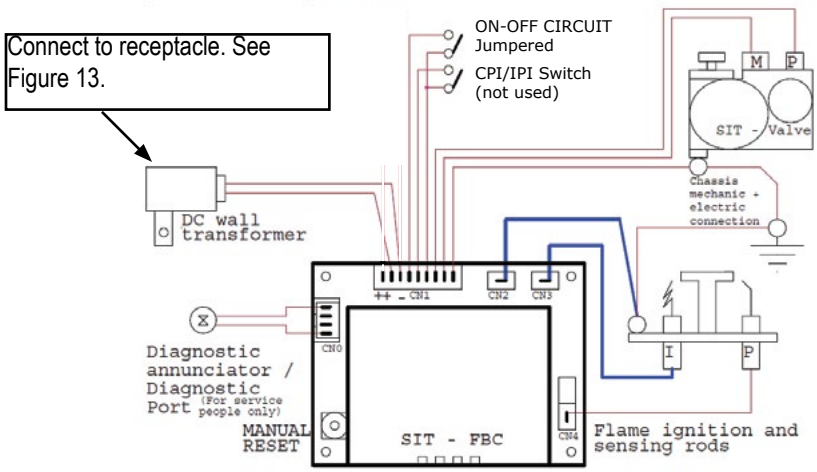

Figure 13a. H36PVN, SIT IPI *Wiring Schemmatic*

Conduit & Wiring clearances

Connect the wiring to the linear power vent as outlined in the previous section, and connect the wiring to the fireplace as outlined in the **H36PVN** schematic, ***figure 13.*** Ensure that the proper clearances are maintained for the wiring and conduit. When installing the wiring it must never run above the vent run and it must be at least 1" clear of all venting.

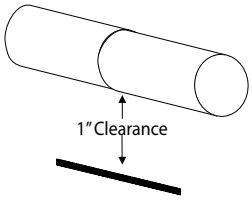

Figure 13b. *Conduit and Wiring Clearances.*

Installation

Section 6: Installing the Gas Line

FUEL CONVERSION

- Verify that your fireplace is compatible with your available gas type. (Natural Gas or Propane shown by "N" or "L" in your model number
- If gas type is not compatible, contact your local Montigo representative to purchase a conversion kit.
- Conversion kits must be installed by a qualified service technician.

GAS PRESSURE

- Optimum appliance performance requires proper input pressures.
- Gas line sizing requirements will be determined in ANSI Z221.3 National Fuel Gas Code in the USA and CAN/CGA B149 in Canada.

Pressure requirements are:

Pressure Requirements	
Gas Pressure	**Natural Gas**
Minimum Inlet Pressure	5.5" W.C.
Manifold Pressure	3.5" W.C.

- The manifold outlet pressure is set from the factory to the appropriate pressure but should be verified.
- To check pressures, control valves have a provision to remove a 1/8" N.PT. plug to be fitted with a hose barb.
- Montigo requires a service shut off valve be located in an accessible location to isolate the gas supply.
- Only install gas shut-off valves approved for use by the state, province, or other governing body in which the fireplace is being installed.

GAS CONNECTION

- See ***Figure 22*** below for location of gas line access.
- Flexible gas connectors must not exceed 3 feet in length, unless allowable within local regulations.
- Connect incoming gas line to the 1/2"or 3/8" gas inlet port.
- Purge all air out of gas line.
- Check appliance connection, valve and valve train under normal operating pressure with a commercially available leak check solution.
- **DO NOT USE A FLAME OF ANY KIND TO TEST FOR LEAKS.**

Note: After gas line is connected, **each *appliance connection*, *valve and valve train*** must be checked while under normal operating pressure with either a liquid solution, or leak detection device, to locate any source of leak. Tighten any areas where bubbling appears or leak is detected until bubbling stops completely or leak is no longer detected.

Important Note: The flexible gas line supplied with the H36PV* may not be acceptable in the jurisdiction which this fireplace is being installed. Please check the Local Gas codes or bylaws for the State or Province prior to installation.

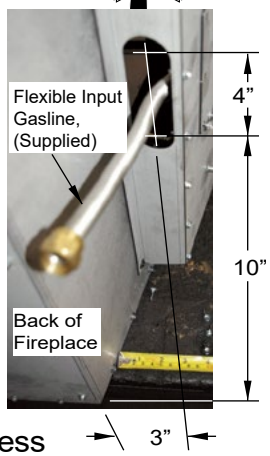

Figure 14. Gas line access. (See Figure 1, L-H Side View)

Gas line & valve: Exterior Access

The **H36PVN** is supplied one (1) one exterior access Panel (LH-side firebox). This panel is fastened directly to the exterior of the firebox with sheet metal screws. To remove the panel follow the steps below:

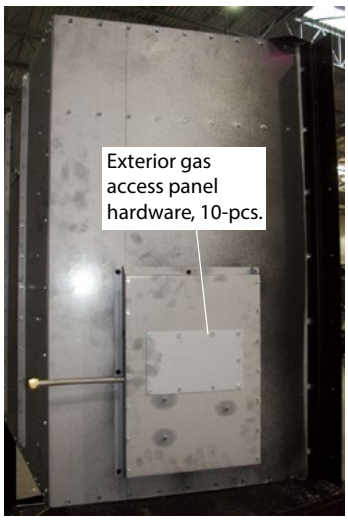

Figure 15. (Removing the Gas valve panel hardware).

Figure 15a. (Inset)

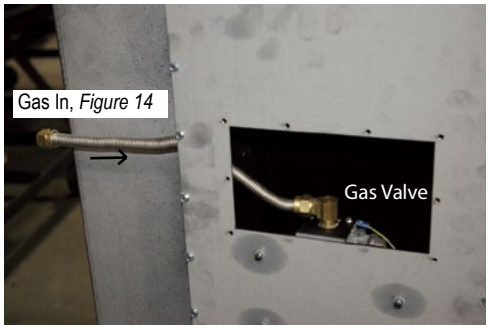

Figure 15b. (Incoming gas supply line (supplied by Montigo) and top of Gas valve).

NOTICE

When pressure testing the fireplace, Gas line, and input system follow the appropriate local codes or your area. DO NOT connect the fireplace to pressures in excess of 1/2lb. This will damage the gas control valve.

Installation

Section 7: Installing & Removing the Screen and Door

Removing the doors:

The screen and door are removed in a few simple steps.

Step 1. Grab the top edge of the screen and pull towards yourself.

Figure 16. Lifting top edge of screen.

Figure 16a. Pulling top edge of screen towards yourself.

Step 2. Lift screen up and off the screen / glass door retainer slides.

Figure 16b. Lift screen off retainer slides.

Step 3. Remove the two (2) screen / glass door retainer slides by pulling firmly with your fingers.

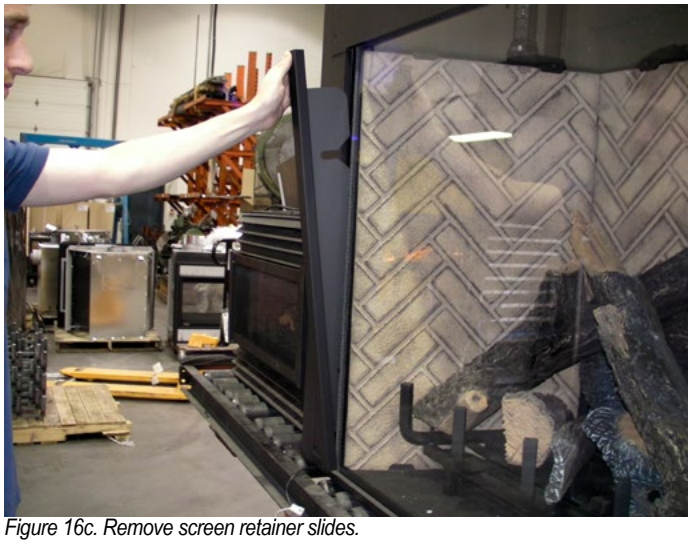

Figure 16c. Remove screen retainer slides.

Step 4. Remove the supplied glass lifting tool from the packaging. Place in the center of the Glass door as shown, and activate the suction feature of the tool, Figure 16d. NOTE: Read ALL the instruction supplied with the tool, and follow the associated operating procedures.

Figure 16d. Supplied Glass lifting tools.

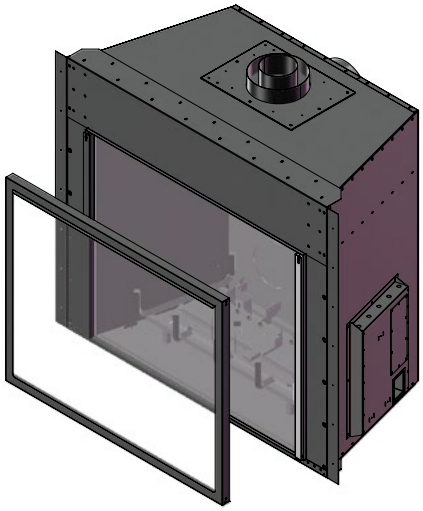

Figure 16e. Rendering of screen

Installation

Step 5. Hold the Glass Removal Tools firmly, Lift the door upward, into the top door frame, Figure 17. Then pull the bottom of the glass door downward, and tilt outward from the bottom fireplace door frame. Figure 17a. NOTE: Read ALL the instruction supplied with the tool, and follow the associated operating procedures.

Figure 17. (Lift the door upward)

Figure 17a. (Lift the bottom of the door outward).

Step 6. Still holding the Glass Removal Tool firmly, remove the door outward, and away from the Fireplace, Figure 17b.

Step 7. Place the door in a safe location while maintenance, cleaning or other operation are in progress.

NOTE: Read ALL the instruction supplied with the tool, and follow the associated operating procedures.

Figure 17b.

Step 8. To reinstall the door, hook the top edge of the door frame into place. Lower and rest the door frame in place.

Step 9. Slide screen / glass door retainer slides back into place.

NOTICE

Do not use ammonia based or abrasive cleaners on the glass, they will permanently etch the surface. Use an approved gas fireplace glass cleaner such as Kel-Kem or White off.

Step 10. Hook the bottom tabs of the screen into the slots in the screen / glass door retainer slides.

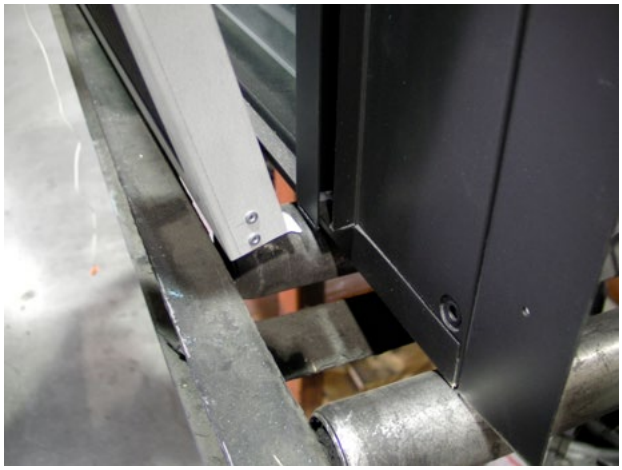

Figure 17c.

Step 11. Push screen back into place securing the top of the screen.

Figure 17d. Pushing screen into place.

Figure 17e.

Installation

Section 8: Installing the Log Set

Installing the Logs:

The **H36PVN** is supplied with six (6) piece ceramic fibre logs. Install as described below:

Step 1. Unpack the logs and handle them very carefully. Set them aside in a safe location until required.

Figure 18. Packaged LogSet as supplied from Montigo.

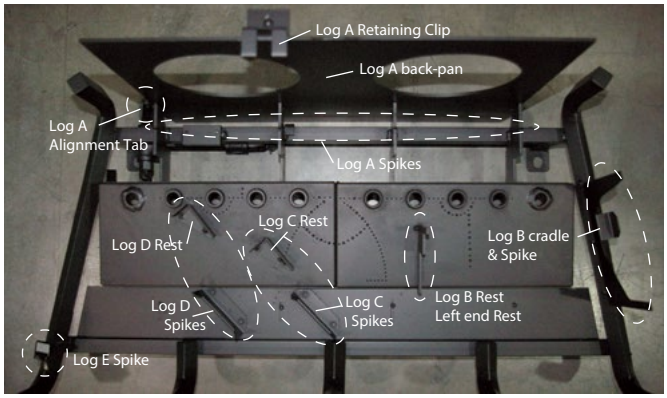

Figure 18a. Log Grate Details & identification.

Step 2. Locate the Log Back Pan Retaining clip, ***Figure, 18a*** above and remove, ***Figures, 18b & 18c***. Place in a safe location (***Philips head screwdriver required***).

Figure 18b.

Figure 18c.

Step 3. Position Back Log 'A' from the previously unpacked package, (***Figure 18***). Place the Log upright, (as shown ***Figure 18d***) and move the Log flush against the sheet metal Back Pan. Without pressing the Log down, move it as far to the left as possible, bumping the bottom Left corner against the alignment tab, (***Figure 18a & 18d***). Lastly, Press the Log FIRMLY downward, onto the sharp spikes, shown in ***Figure 18a & 18e.***

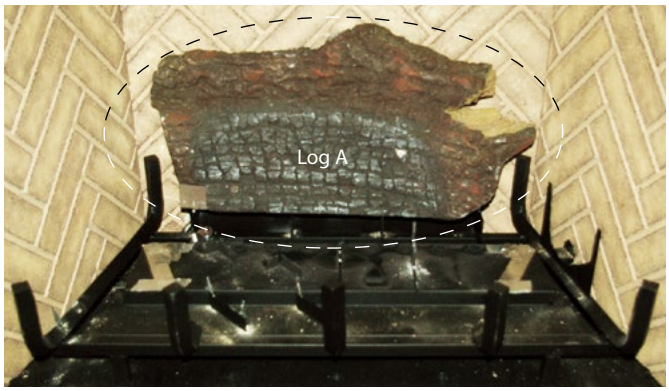

Figure 18d. Location of Log 'A'.

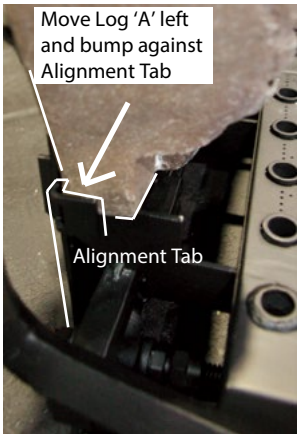

Figure 18e. Alignment of Log 'A'.

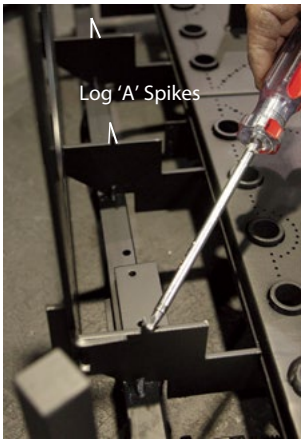

Figure 18f. Log 'A' Spikes, Figure 18a.

Step 4. Once the 'Back Log 'A' is in it's final Position, hold the log in place, and reinstall the Retaining Clip (removed earlier). *Press down the Clip for the sharp teeth to penetrate into the top of the Log.* (***Figure 18g***). (***Philips head screwdriver required***).

Figure 18g. Securing Log 'A'.

Installation

Step 5. Position the Bottom Right Log 'B' and place Right end in the sheet metal cradle (located at the far right of the Log Grate), ***Figure, 18h.*** and Log Rest in the center of the burners, ***Figure, 18a.*** Press FIRMLY onto the spikes. Note location of hole feature in Log.

Figure 18h. Positioning of Log (B).

Step 6. Position Bottom Center Log 'C', with the flat edge down. and place square end inside Log Rest, aligning the center of the Log with the Spikes, ***Figure, 18a.*** Press FIRMLY, seating the Log onto the sharp spikes, ***Figure 18i***. Note the color variation in the Log.

Figure 18i. Installation of Log 'C'.

Step 7. Place Bottom Left Log 'D', with the flat edge down. and place square end inside Log Rest, aligning the center of the Log with the Spikes, ***Figure, 18a.*** Press FIRMLY, seating the Log onto the sharp spikes, ***Figure 18j***. Note the color variation in the Log.

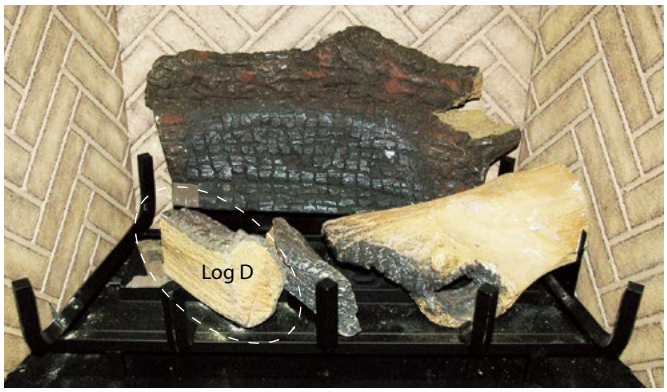

Figure 18j. Installation of Log 'D'.

Step 8. Place Front Left Log 'E', with the Knots pointing in the directions shown, ***Figure, 18k***. Place the ***Darker, narrow end*** on top of Log 'A' as shown, (***arced line***). Press FIRMLY onto the sharp spike at Lower end, ***Figure 18a***.

Figure 18k. Installation of Log 'E'.

Step 9. Position Front Right Log 'F', with the Knots pointing in the directions shown, ***Figure, 18l***. Place the ***Lighter, narrow end*** on top of Log 'E' as shown, (***arced line***). Align for length and location, ***Figure 18k***.

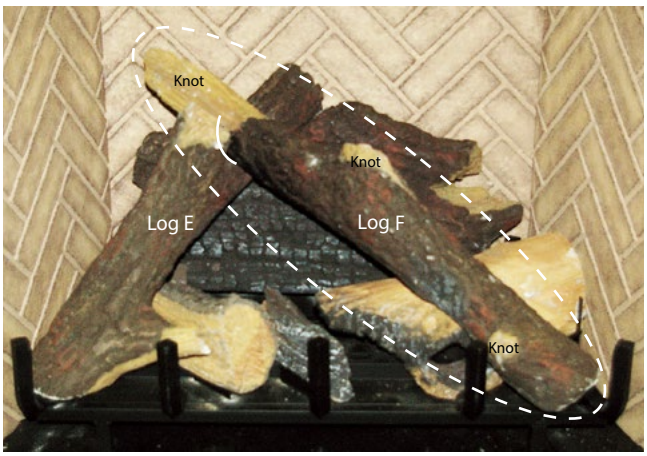

Figure 18l. Installation of Log 'F'.

Figure 18m. Completed Log Set Installation.

Operation

Section 9: Operation - Start up Sequence

For Your Safety - READ BEFORE LIGHTING:

WARNING

If the information in these instructions is not followed exactly, a fire or explosion may result causing property damage, personal injury or death.

WARNING/ CAUTION: Hot while in operation. Do not touch. Severe burns may result. Keep children, clothing, furniture, gasoline and other liquids having flammable vapours away.

See installation and operating instructions accompanying this appliance.

A. This appliance is equipped with an ignition system that lights the pilot burner automatically. Do not attempt to light the pilot by hand.

B. BEFORE LIGHTING smell all around the appliance area for gas. Be sure to smell next to the floor because some gas is heavier than air and will settle on the floor.
What To Do If You Smell Gas:
- Do not try to light any appliance.
- Do not touch any electrical switch; do not use any phone in your building.
- Immediately call your gas supplier from a neighbour's phone. Follow the gas supplier's instructions.
- If you cannot reach your gas supplier, call the Fire Department.

C. Use only your hand to push in or turn the gas control knob. Never use tools. If the knob will not push in or turn by hand, don't try to repair it, call a qualified service technician. Force or attempt to repair may result in a fire or explosion.

D. Do not use this appliance if any part has been under water. Immediately call a qualified service technician to inspect the appliance and to replace any part of the control system, and any gas control which has been under water.

Standing (Continuous) Pilot Ignition (SIT NOVA 820)

Lighting Instructions:

1. **STOP!** Read the safety information above on this label.
2. Lift out the lower Horizontal access panel.
3. Push in gas control knob and turn clockwise to "OFF."
4. Wait five (5) minutes to clear out any gas. Smell for gas, including near the floor. If you then smell gas, **STOP!** Follow "B" in the safety information above on this label. If you don't smell gas, go to the next step.
5. Locate pilot burner *(See illustration at right.)* and follow steps below.
6. Turn knob on gas control counter clockwise to "PILOT."
7. Push in gas control knob completely and hold. Light with Piezo Igniter button. Continue to hold the control knob in for about (1) minute after the pilot is lit. Release the knob and it will pop back up. Pilot should remain lit. If it goes out repeat steps 3 through 8.
   - If knob does not pop up when released. Stop and immediately call your service technician or gas supplier.
   - If the pilot will not stay lit after several tries, turn the gas control knob to "OFF" and call your service technician or gas supplier.
8. Push in gas control knob and turn counter-clockwise to "ON."
9. Replace the lower Horizontal access panel.
10. Turn on remote switch to ignite fire.

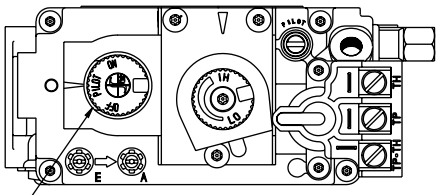

Gas Control Knob
(Shown in "Pilot" postion.)

NOTE: Gas control knob cannot be turned from "PILOT" to "OFF" unless knob is pushed in slightly. Do not force.

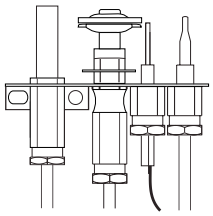

To Turn Off Gas To Appliance:

1. Turn off remote switch.
2. Lift out the lower Horizontal access panel.
3. Push in gas control knob slightly and turn clockwise to "Off". Do not force.
4. Replace the lower Horizontal access panel.

Maintenance

Section 10: Maintenance

Removing the Log Grate:

The **H36PVN** is supplied with a log Grate that is fastened directly to the base of the Fireplace. To remove the Grate, to perform certain Maintenance functions, follow the steps described below:

Step 1. CLOSE GAS VALVE AT INCOMING TO FIREPLACE, ***(By Qualified Persons ONLY, See 'Before You Start' in the Index)***.

Step 2. Remove the two (2) machine screws that hold the Pilot Assembly in place, ***Figure 20***. ***(Philips head screwdriver required)***.

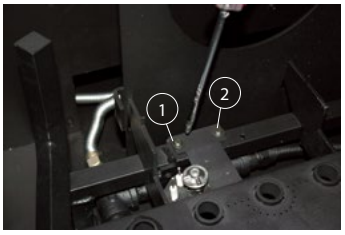

Figure 20. (Pilot mounting machine screws).

Step 3 & 4 Remove the two (2) *(RH & LH)* Base mounting machine screws, ***Figure 20a & 20b***. ***(Philips head screwdriver required)***.

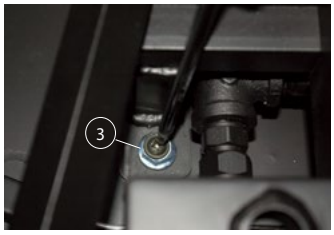

Figure 20a. (LH Base mounting machine screw).

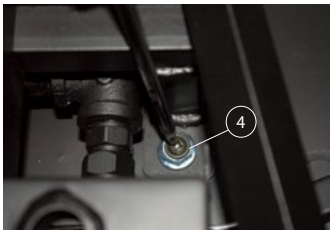

Figure 20b. (RH Base mounting machine screw).

Step 5. Loosen, and Remove the Flexible Gas hose *(at fitting)*, (turn clockwise, left to right) ***Figure 20c & 20d***. ***(3/4" Open end wrench required)***.

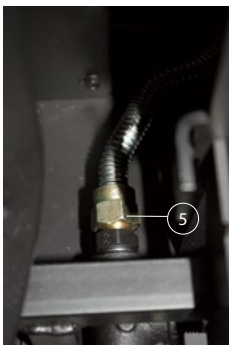

Figure 20c. (Gas fitting).

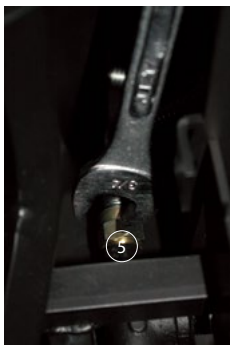

Figure 20d. (Loosening Gas fitting on burner).

NOTE: Ensure all 5-steps are complete before removing Log Grate. *(Failing to do so may damage the flexible gas hose, or mounting hardware of the grate).* ***Figure 14e.***

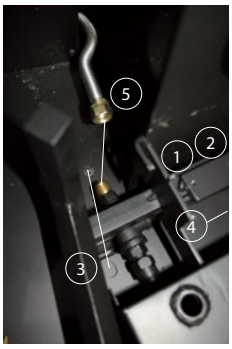

Step 1 & 2. Figure 20. *(Pilot mounting machine screws).*

Step 3 & 4. Figure 20a. *(LH Base mounting machine screw).* **Figure 20b.** *(RH Base mounting machine screw).*

Step 5. Figure 20c & 20d. Loosen, and Remove the Flexible Gas hose *(at fitting)*, (turn clockwise, left to right) ***(3/4" Open end wrench required)***.

Figure 20e. (Log Grate Removal Sequence).

Removing the Refractory:

The **H36PVN** is supplied three (3) pieces of firebox refractory Lining. These panels are fastened directly to the interior sides, and back of the Fireplace firebox with brackets. To remove the brackets and panels follow the steps described below:

Step 1. Remove the RH-TOP machine screw that hold the Side Refractory panel in place, then the bottom, ***Figure 22***. ***(Philips head screwdriver required)***.

Step 2. Remove the RH-Refractory panel from the firebox, ***Figure 22***. ***(Place the Refractory panel somewhere safe where it will not get chipped or damaged)***.

Step 3. Follow step1 & 2 to remove the LH-Side Refractory panel, ***Figure 22***. ***(Philips head screwdriver required)***.

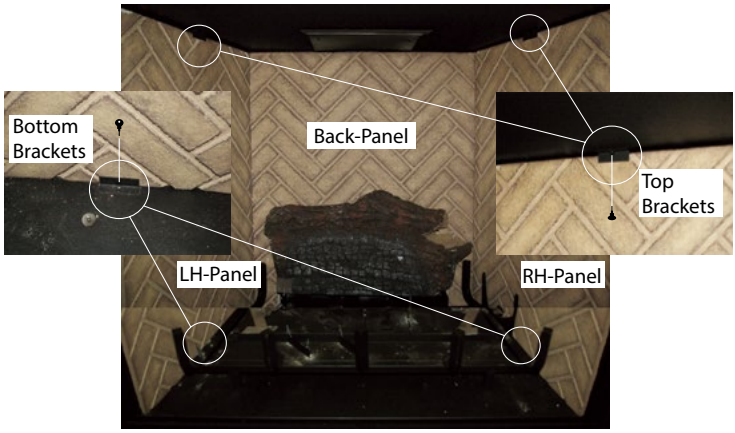

Figure 22. (Removing Refractory panels).

Maintenance

Removing the Stand-off Panels:

The **H36PVN** is supplied two (2) two Stand-off Panels (RH & LH) that hold the firebox refractory Lining in place. These panels are fastened directly to the interior sides of the firebox with sheet metal screws. To remove the panels follow the steps described below:

Step 1. Remove the two (2) RH-TOP machine screw that hold the Side panels in place, then the bottom two (2) machine screws, ***Figure 24***. (***Philips head screwdriver required***).

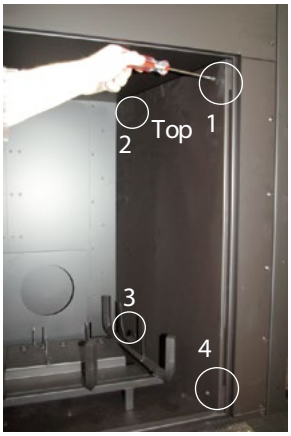

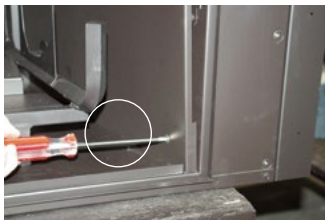

Figure 24. (Inset).

Figure 24. (Removing interior stand-off panel hardware).

Step 2. Tilt the panel out from the top, and remove the panel from the firebox. Pull out of the firebox straight, toward you without hitting the Grate or panel Retaining brackets, ***Figure 24a***.

Note: Place the panel somewhere safe where it will not get damaged.

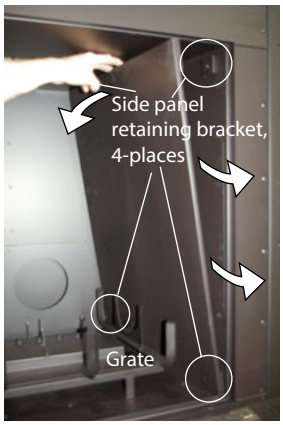

Figure 24a. (Removing interior stand-off panels).

Step 3. Follow step1 & 2 to remove the LH-Side panel, ***Figure 24 & 24a***. (***Philips head screwdriver required***).

Removing the Access Panel:

The **H36PVN** is supplied one (1) one interior access Panel (RH-side) that contains the electronics and power control circuits. This panel is fastened directly to the interior of the firebox with sheet metal screws. To remove the panel follow the steps below:

Step 1. Remove the RH Refractory Panel as described in ***Figure 22***.

Step 2. Remove the RH Refractory Stand-off Panel as described in ***Figure 24 & 24a***.

Step 3. Having these two steps completed, remove the eight (8) machine screw that hold the Side panels in place, ***Figure 26***. (***Philips head screwdriver required***).

Step 4. Slightly tilt panel, and pull out between the grate and firebox wall, ***Figure 26a***.

Figure 26. (Removing the panel hardware).

Figure 26a. (Removing the panel from the firebox).

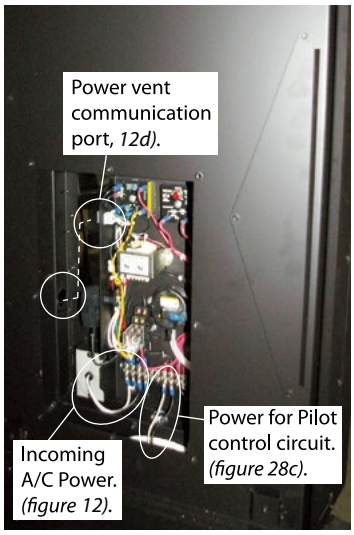

Figure 26b. (A/C Connections, Gas module and fireplace chassis). See figure 13, Schematic).

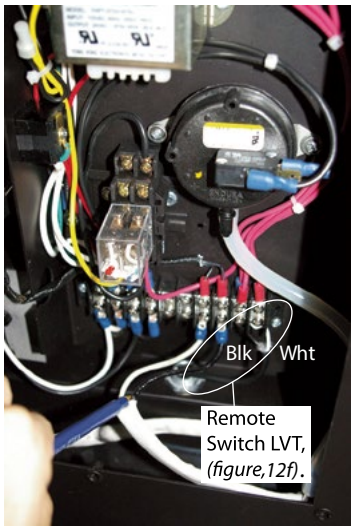

Figure 26c. (Remote LVT Switch connection). See figure 13, Schematic).

Maintenance

Removing the Interior firebox Access Panel:

The **H36PVN** is supplied one (1) one interior access Panel (LH-side firebox) that contains the Gas valve, and electronics. This panel is fastened directly to the interior of the firebox with sheet metal screws. To remove the panel follow the steps below:

Step 1. Remove the LH Refractory Panel as described in ***Figure 22***.

Step 2. Remove the LH Refractory Stand-off Panel as described in ***Figure 24 & 24a***.

Step 3. Once these two steps are complete, remove the eight (8) machine screw that hold the Side panels in place, ***Figure 28***. *(**Philips head screwdriver required**).*

Step 4. Slightly tilt panel, and pull out between the grate and firebox wall, ***Figure 28a***.

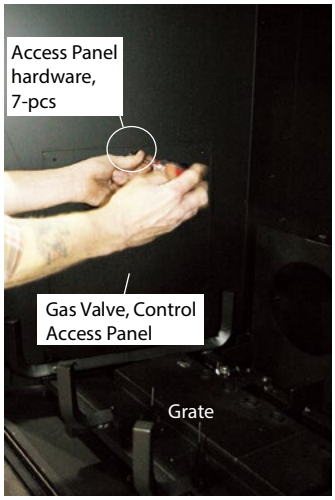

Figure 28. (Removing the panel hardware).

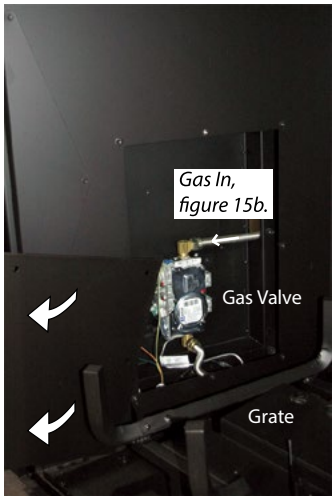

Figure 28a. (Removing the panel from the firebox), incoming gas from service and Gas valve.

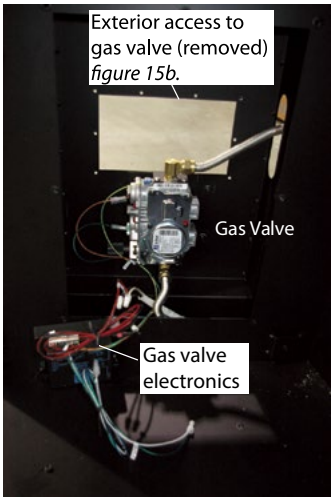

Figure 28b. (Gas valve and Gas valve electronic module). See figure 13a, Schematic).

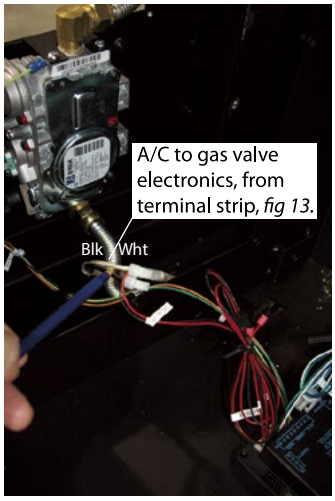

Figure 28c. (Gas valve electronic module A/C Connection). See figure 13a, Schematic).

General

- **Have the fireplace and installation inspected yearly**. The inspection must include, but is not limited to, the following:
  - A visual check of the entire vent system and termination.
  - An inspection of the explosion relief flappers and the door gasketing to ensure a proper seal.
  - An inspection of the burner, venturi, and primary air openings.
  - An inspection of the gas valve, gas components, and pilot flame. For your convenience a 1/8" manifold pressure tap is supplied on the gas valve for a test gauge connection.
  - Ensure proper log placement as per this manual.
  - Inspection of all optional equipment; fans, thermostats, etc.
- For **Natural Gas** this appliance requires a minimum inlet pressure of 5.5" W.C. and a manifold pressure of 3.5" W.C.
- For **Propane Gas** this appliance requires a minimum inlet pressure of 11" W.C. and a manifold pressure of 10" W.C.
- Always keep the fireplace area clear and free of combustible materials, as well as gasoline and other flammable vapors and liquids.
- Do not use this appliance if *any part has been under water*. Immediately call a qualified service technician to inspect the appliance and to replace any part of the control system and any gas control which has been under water.

Cleaning

When the fireplace is first activated, there may be some smoking and a visible film may be left on the glass. This is a normal condition, and is the result of burning of protective coatings on new metal.

- Glass must be cleaned periodically to remove any film (which is a normal by-product of combustion) which may be visible. Film can easily be removed by removing the door, as shown on **Pages 26** and **27**. Handle the door carefully, and clean it with non-abrasive glass cleaners. One of the most effective products is Kel Kem.
- Use a vacuum cleaner or whisk broom to keep the control compartment, burner, and firebox free from dust and lint.
- Logs may be cleaned periodically with a vacuum to remove soot or other contaminates.

Maintenance

Troubleshooting (only to be done by qualified service personnel):

Symptom	Troubleshooting Step
Powervent not running when WALL SWITCH is turned ON	Check to make sure Main Power is ON and Fuse is not blown
Fireplace doesn't spark after turning WALL SWITCH on	Check to make sure Power Vent is ON and running at Full Speed. Please note the fireplace has a 1 minute pre-purge before lighting the pilot assembly
Fireplace goes out after sometime and turns back ON automatically after sometime	Ensure the vent or the exhaust termination are not blocked by debris. Adjust the Fan speed higher and restart the fireplace. If failure persists, contact Montigo for support.

If your fireplace still does not operate correctly, consult your dealer or the manufacturer.

Replacement Parts

Replacement Parts:

Part Description	Part Number
Gas Valve - N.G. Manual Hi low	RGC3044
Pilot Assembly - N.G. - Complete	RPA035
Igniter Probe Assembly	RGC3075
Flame sensor rod assembly	RGC3076
Pilot Tubing 18" Length	RPTA03
Control Module	RGC3035
Wiring Harness	RGC3041
DC Adapter	RGC3043
Power Vent Control Box	ECB007
Log Set	RLGSHW42
Replacement Glass	GL1071
Brick Kit (Refractory)	HBK36H
Replacement Screen	RSCH36PV

Appendix

Appendix A: Power Vent Locations

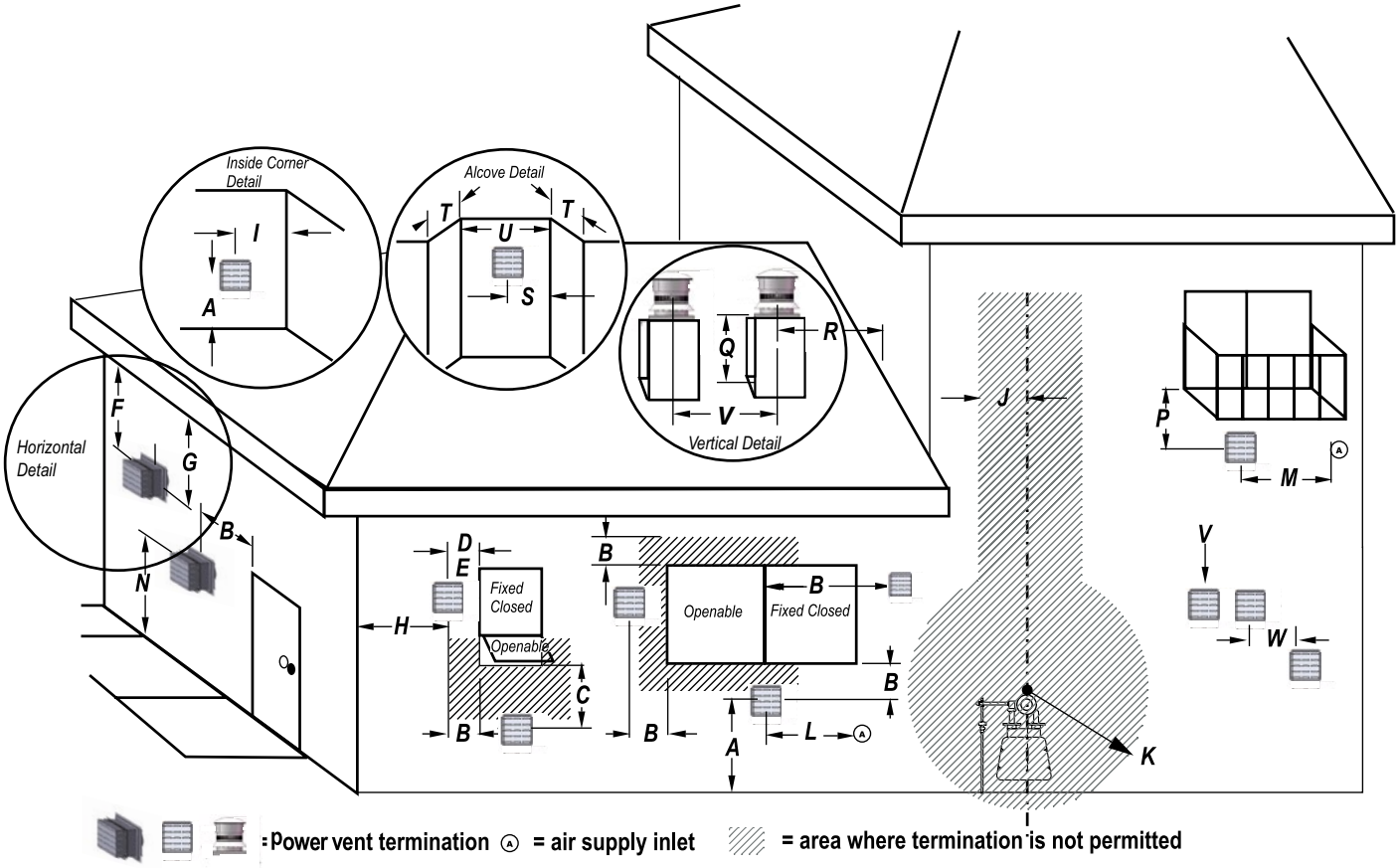

A = *clearance to the termination frame above grade, veranda, porch, deck, or balcony [30 inches (75 cm) minimum]*

B = *clearance to door, or sides and top of window, that may be opened [30 inches (75 cm) minimum for appliances.*

C = *clearance to bottom of window that may be opened horizontally [36 inches (92 cm) minimum for appliances.*

D = *no clearance to permanently closed window when installed with approved glass penetration termination*

E = *clearance to permanently closed window [30 inches 75 cm recommended to prevent condensation on window]*

F = *vertical clearance to ventilated soffit located above the termination within a horizontal distance of [30 inches 75 cm] from the centreline of the termination [30 inches (75 cm) minimum]*

G = *clearance to unventilated soffit [30 inches (75 cm) minimum to non-combustibles] [30 inches (75 cm) minimum to combustibles]*

H = *clearance to outside corner [30 inches (75 cm) minimum]*

I = *clearance to inside corner [30 inches (75 cm) minimum]*

J = ** not to be installed above a meter/regulator assembly within 40" (103 cm) horizontally from the centreline of the regulator*

K = *clearance to service regulator vent outlet [3 feet minimum in the United States] [*6 feet (1.8 m) minimum in Canada]*

L = *clearance to non-mechanical air supply inlet to building or the combustion air inlet to any other appliance [16 inches (41 cm) minimum for appliances ≤100 000 BTU/H (30kW)]*

M = *clearance to mechanical air supply inlet [*6 feet (1.8 m) minimum]*

N = *† clearance above paved sidewalk or a paved driveway located on public property [*7 feet (2.1 m) minimum]*

P = *clearance under veranda, porch, deck, or balcony [30 inches (75 cm) minimum‡ to non-combustibles] [30 inches (75 cm) minimum‡ to combustibles]*

Q = *clearance above a roof [18 inches (46 cm) minimum]*

R = *clearance to adjacent walls and neighboring buildings [30 inches (75 cm) minimum]*

S = *clearance from corner in recessed location [30 inches (75 cm) minimum]*

T = *maximum depth in recessed location [48 inches (122 cm) minimum]*

U = *minimum width for back wall of recessed location [60 inches (150 cm) minimum]*

V = *minimum horizontal clearance between the frames of two terminations that are level, (see applicable Detail).*

W = *horizontal clearance between the frames of two terminations that are not level. [30 inches (75 cm) minimum]*

† *a vent shall not terminate directly above a sidewalk or paved driveway which is located between two single family dwellings and serves both dwellings*

‡ *only permitted if veranda, porch, deck, or balcony has an open side that is equal to or greater than the depth of the enclosed area*

* *as specified in CGA B149 Installation Codes. Note: local Codes or Regulations may require different clearance.*

Appendix

Appendix A: Power Vent Locations

EDVRSPV58 Vertical Power Vent Detail

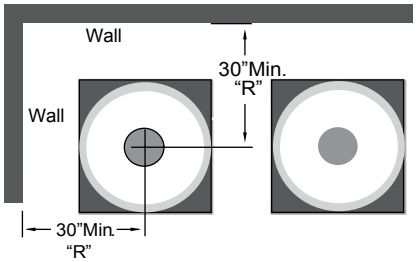

Top View

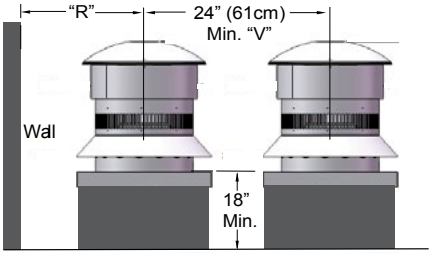

Front View

EDVWSPV58 Horizontal Power Vent Detail

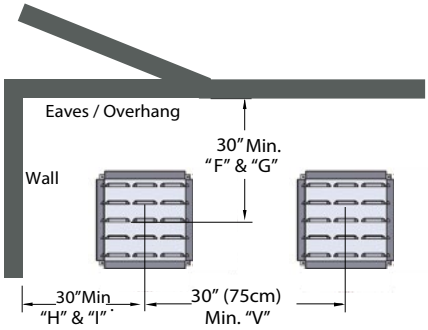

Front View

Not Acceptable

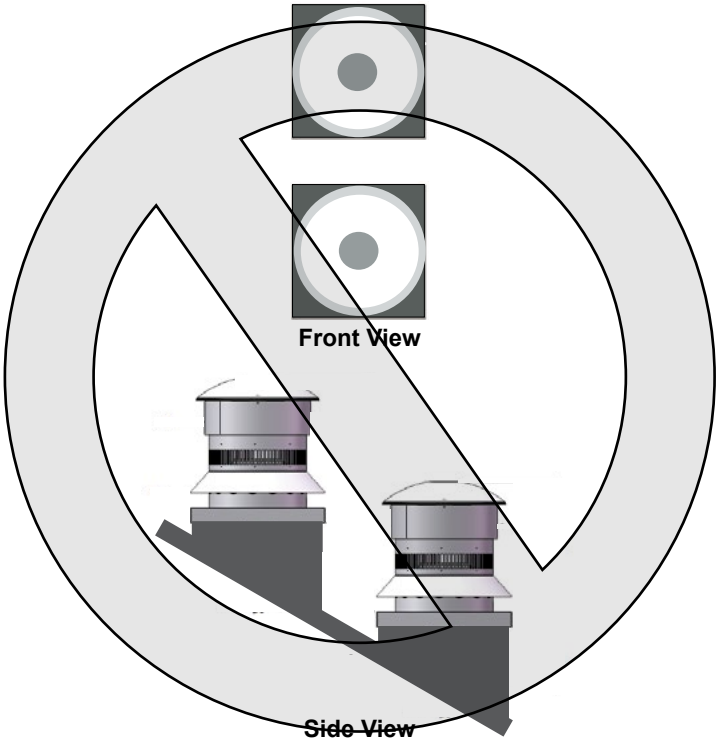

Appendix

Appendix

Appendix B: Warranty

MONTIGO RESIDENTIAL WARRANTY PROGRAM

Canadian Heating Products Inc. and/or Montigo DelRay Corp (collectively referred to herein as "The Companies"), warrants the Montigo gas appliance (referred to herein as 'the appliance') to be free from defects in materials and workmanship at the time of manufacture. The gas appliance and related components are further subject to the terms and conditions set forth below.

This warranty covers the following Montigo product series: Distinction, Divine & Divine Outdoor (H-Series), Illume (FID Inserts), Phenom (L/P/PL-Series), Exemplar (R/RP-Series), Mahana and DelRay

Component	Coverage Period	Labor Coverage
Firebox, heat exchanger	15 years	1 year
Main burner	15 years	1 year
Gas control valve and related control components (pilot assembly, spark electrode flame sensors, thermopile)	1 year	1 year
Electrical components (internal blowers, ignition control module, wiring, switches, remote control systems, blower control module, accent bulbs)	1 year	1 year
Firebox media (logset, glass beads, river rocks)	1 year	1 year
Glass (thermal breakage)	1 year	1 year
Plated, painted finishes (including interior reflective glass) *	1 year	1 year
Refractory lining	1 year	1 year
Mesh/Glass safety barriers	1 year	1 year
Power vent termination	1 year	1 year
Montigo terminations*	10 years	1 year
Montigo venting (excluding termination)	15 years	1 year

** Exterior painted surfaces exempt*

QUALIFICATIONS TO THE WARRANTY

This Warranty only covers gas appliances installed in the United States or Canada.

To receive the benefits of this warranty, the appliance must be purchased, installed and serviced annually by a dealer authorized by The Companies for the warranty to be valid.

The gas appliance must be installed by a licensed professional in accordance with The Companies' installation instructions and local building codes. The warranty on the appliance covers only components manufactured by The Companies. The use of components manufactured or supplied by other manufacturers and used in conjunction with the appliance could create serious safety hazards, may result in the denial of certification by recognized national safety agencies and could violate local building codes. Such use may untimely void this warranty. This warranty does not cover any damages occurring from the use of any components not manufactured or supplied by The Companies.

The appliance must be subjected to normal use. The appliance is designed to burn natural gas (NG) or liquefied petroleum (LP) only. Burning conventional fireplace fuels such as wood, coal or any other solid fuel will cause damage to the appliance, produce excessive temperatures will result in a fire hazard and void all warranties. This warranty is transferable. The appliance must remain in its original place of installation to be valid.

If the components of the appliance covered by this warranty are found to be defective within the time frame stated (see The Companies investigation of claims), The Companies will, at its option, replace or repair defective components of the appliance manufactured by The Companies at no charge and will also pay for labor costs (in accordance with schedule) incurred in replacing or repairing components. If repair or replacement is not commercially practical, The Companies will, at its sole discretion, fully discharge all obligations under the warranty by refunding the verified dealer purchase price of the appliance, excluding the cost of labor unless the labor is covered by the terms of the warranty.

This warranty covers only parts and labor as provided above. In no case shall the companies be responsible for materials, components or construction, which are not manufactured or supplied by The Companies, or for the labor necessary to install, repair or remove such materials, components or construction. All replacement or repair components will be shipped F.O.B. from the nearest Company factory.

LIMITATION ON LIABILITY

It is agreed and understood that The Companies sole obligation, and purchaser's exclusive remedy under this warranty, under any other warranty, expressed or implied, or in contract, tort or otherwise, shall be limited to repair, replacement or refund as specified above. The opinion of The Companies with respect to these matters shall be final.

In no event shall The Companies be responsible for any incidental or consequential damages caused by (but not limited to) improper installation, installation by an unqualified or unauthorized installer, accident, lack of regular maintenance, user error, abuse, misuse, Acts of God, power surges, floods, natural disasters, force majeure, defects in its appliance whether such damage occurs or is discovered before or after replacement or repair, and whether or not such damage is caused by The Companies negligence. Some jurisdictions do not allow the exclusion or limitation of incidental or consequential damages, so the above limitation or exclusion may not apply to you. The duration of any implied warranty with respect to the appliance is limited to the duration of the foregoing warranty. Some jurisdictions do not allow limitations on how long an implied warranty lasts, so the above limitation or exclusion may not apply to you.

Appendix

Appendix B: Warranty Continued

EXCLUSIONS TO WARRANTY

Corrosion or rust of any kind due to a lack of maintenance, inadequate combustion air or improper venting and corrosive chemicals/environments, expansion and contraction of metals or minor movements of components causing noise are not covered by this warranty.

Willful misconduct (i.e. use of the appliance with problems known to the purchaser and causing further damages), including unauthorized or self-performed 'fixing' or exploration of the appliance's internal workings will void the warranty.

Appliances on which the serial number has been altered, defaced, removed or made illegible will void the warranty.

Costs incurred for diagnosis, service work, shipping and handling of defective or replacement parts are not covered under this warranty.

The published warranties are not applicable for any equipment manufactured by The Companies that has been sold direct to the consumer via internet or auction websites. The Companies do not endorse, approve or certify any online sale of its products through auction websites, online retailers or any other method of online sales direct to consumers.

INVESTIGATION OF CLAIMS AGAINST WARRANTY

The Companies reserve the right to investigate any and all claims against this warranty and decide upon method of settlement.

The Companies are not responsible for work done without written consent of The Companies.

The Companies shall in no event be responsible for any warranty work done without first obtaining the Companies written consent.

The Companies employees and dealers have no authority to make any warranties to neither alter this warranty nor authorize any remedies in addition to or inconsistent with those stated within this warranty.

IF WARRANTY SERVICE IS NEEDED

To make a claim under this warranty, contact your installing dealer or contractor. The installing dealer is responsible for providing service and will contact the companies to initiate warranted parts replacements. In the event the installing dealer is unavailable, contact your nearest authorized Montigo dealer (www.Montigo.com) or contact Montigo direct at techsupport@montigo.com. Ensure you have your sales receipt and the model and serial number of your appliance.

DO NOT ATTEMPT TO DO ANY SERVICE WORK YOURSELF

If you cannot locate the installing dealer, or nearest dealer/distributor, you must notify The Companies in writing.

USA Offices

6955 Salashan Parkway

Ferndale WA, 98248

techsupport@montigo.com

Canadian Offices

27342 Gloucester Way

Langley, BC V4W 4A1

techsupport@montigo.com

The terms and conditions of this warranty may be altered or amended from time to time without prior notice.

WARRANTY PERIOD: Warranty coverage begins on the date of original purchase. In the case of new construction, warranty coverage begins on the date of first occupancy of the dwelling or six months after the sale of the product by an independent, authorized Company dealer/ distributor, whichever occurs earlier.

Appendix

Appendix C: State of Massachusetts

Amendment

(Gas Fireplace / Equipment sold in the State of Massachusetts)
5.08: Modifications to NFPA-54, Chapter 10

(1) Revise NFPA-54 section 10.5.4.2 by adding a second exception as follows:
Existing chimneys shall be permitted to have their use continued when a gas conversion burner is installed, and shall be equipped with a manually reset device that will automatically shut off the gas to the burner in the event of a sustained back-draft.

(2) Revise 10.8.3 by adding the following additional requirements:
(a) For all side wall horizontally vented gas fueled equipment installed in every dwelling, building or structure used in whole or in part for residential purposes, including those owned or operated by the Commonwealth and where the side wall exhaust vent termination is less than seven (7) feet above finished grade in the area of the venting, including but not limited to decks and porches, the following requirements shall be satisfied:

1. INSTALLATION OF CARBON MONOXIDE DETECTORS. At the time of installation of the side wall horizontal vented gas fueled equipment, the installing plumber or gas fitter shall observe that a hard wired carbon monoxide detector with an alarm and battery back-up is installed on the floor level where the gas equipment is to be installed. In addition, the installing plumber or gas fitter shall observe that a battery operated or hard wired carbon monoxide detector with an alarm is installed on each additional level of the dwelling, building or structure served by the side wall horizontal vented gas fueled equipment. It shall be the responsibility of the property owner to secure the services of qualified licensed professionals for the installation of hard wired carbon monoxide detectors
a. In the event that the side wall horizontally vented gas fueled equipment is installed in a crawl space or an attic, the hard wired carbon monoxide detector with alarm and battery back-up may be installed on the next adjacent floor level.
b. In the event that the requirements of this subdivision can not be met at the time of completion of installation, the owner shall have a period of thirty (30) days to comply with the above requirements; provided, however, that during said thirty (30) day period, a battery operated carbon monoxide detector with an alarm shall be installed.

2. APPROVED CARBON MONOXIDE DETECTORS. Each carbon monoxide detector as required in accordance with the above provisions shall comply with NFPA 720 and be ANSI/UL 2034 listed and IAS certified.

3. SIGNAGE. A metal or plastic identification plate shall be permanently mounted to the exterior of the building at a minimum height of eight (8) feet above grade directly in line with the exhaust vent terminal for the horizontally vented gas fueled heating appliance or equipment. The sign shall read, in print size no less than one-half (1/2) inch in size, “GAS VENT DIRECTLY BELOW. KEEP CLEAR OF ALL OBSTRUCTIONS”.

4. INSPECTION. The state or local gas inspector of the side wall horizontally vented gas fueled equipment shall not approve the installation unless, upon inspection, the inspector observes carbon monoxide detectors and signage installed in accordance with the provisions of 248 CMR 5.08(2)(a)1 through 4.
(b) EXEMPTIONS: The following equipment is exempt from 248 CMR 5.08(2)(a)1 through 4:

1. The equipment listed in Chapter 10 entitled “Equipment Not Required To Be Vented” in the most current edition of NFPA 54 as adopted by the Board; and
2. Product Approved side wall horizontally vented gas fueled equipment installed in a room or structure separate from the dwelling, building or structure used in whole or in part for residential purposes.

(c) MANUFACTURER REQUIREMENTS - GAS EQUIPMENT VENTING SYSTEM PROVIDED. When the manufacturer of Product Approved side wall horizontally vented gas equipment provides a venting system design or venting system components with the equipment, the instructions provided by the manufacturer for installation of the equipment and the venting system shall include:
1. Detailed instructions for the installation of the venting system design or the venting system components; and
2. A complete parts list for the venting system design or venting system.

(d) MANUFACTURER REQUIREMENTS - GAS EQUIPMENT VENTING SYSTEM NOT PROVIDED. When the manufacturer of a Product Approved side wall horizontally vented gas fueled equipment does not provide the parts for venting the flue gases, but identifies “special venting systems”, the following requirements shall be satisfied by the manufacturer:
1. The referenced “special venting system” instructions shall be included with the appliance or equipment installation instructions; and
2. **The “special venting systems”** shall be Product Approved by the Board, and the instructions for that system shall include a parts list and detailed installation instructions.

(e) A copy of all installation instructions for all Product Approved side wall horizontally vented gas fueled equipment, all venting instructions, all parts lists for venting instructions, and/or all venting design instructions shall remain with the appliance or equipment at the completion of the installation.

(3) After NFPA-54 section 10.10.4.2 add a new section 10.10.4.3 as follows:
When more than four gas appliances are to be vented through a common gas vent or common horizontal vent manifold, a plan of the proposed vent installation shall be submitted to the Inspector and the serving gas supplier for review and approval.

Extraction from: Massachusets Rules and Regulations
5.00: Amendments To 2002 Edition Of ANSI Z223.1-NFPA-54

Indoor fireplace in protected outdoor applications

This fireplace may be installed into outdoor locations provided they are suitably protected from direct water impingement. However, all installation clearances in the appliance manual must be observed. Framing, Clearances to Combustibles, Mantel Heights, Facing Requirements, Venting Installation, etc. Use supplied Safety Screen.

Dimension "A"	X .75	= min. overhang depth
The overhang must extend at least 75% of the roof line height (A) Height is measured from bottom of fireplace opening to the ceiling		

Example formula
Min. overhang = A x 0.75 For example: if distance A is 84", the overhang must extend at least 63"

See through fireplace

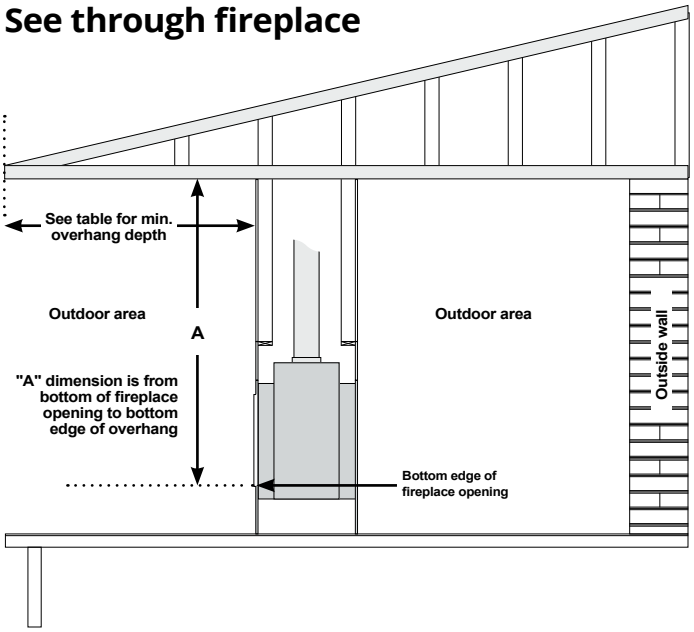

Single sided fireplace

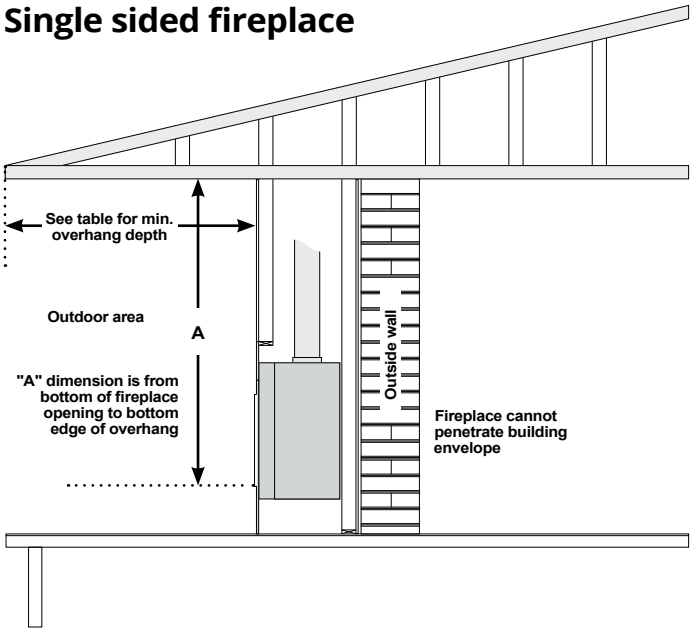

Notes

- Overhang requirements must be applied to both the front and sides of the fireplace
- Indoor see-through models cannot be installed as indoor/outdoor fireplaces, as air flows through both sides of the fireplace.
- If the fireplace will be in contact with salt water, then an outdoor fireplace is recommended
- Follow all building codes, including those addressing fireplace penetration of an exterior building envelope
- Follow all product installation instructions; including framing, clearances to combustibles, mantel heights, Facing Requirements, venting installation, etc. Use supplied safety screen.
- All wiring connections to line power shall be in accordance with outdoor requirements of; NECA NFPA 70 in the USA Canadian Electrical Code, CSA C22.1 for Canada.
- The Fireplace is not to be operated in temperatures below freezing (0°C I 32°F)

NOTICE

Units with tempered glass doors are vulnerable to rapid and/or extreme changes in temperature (thermal shock). Take care to prevent water from contacting the fireplace, especially if it is hot.

H36PV

Power Vented Residential Gas Fireplace