SALISBURY

by Honeywell

UTILITY PRODUCTS

YOUR SINGLE SOURCE FOR PERSONAL ELECTRICAL-SAFETY PROTECTION

UTILITY PRODUCTS
SALISBURY by Honeywell

2012

Ask your local SALISBURY representative for these additional safety products materials from SALISBURY.

Industrial Products

DVDs

SALISBURY BY HONEYWELL
© 2011 HONEYWELL INTERNATIONAL INC. ALL RIGHTS RESERVED.
10M PRINTED IN USA 2011
PART# FULLUTILITY V.090811

WORLD-WIDE LOCATIONS

SALISBURY BY HONEYWELL IS EVERYWHERE.

Salisbury by Honeywell has manufacturing facilities, distributors, and/or representatives located throughout the United States and the world. Safety is our priority and we understand it is your priority too. It is important to us that you are able to reach us no matter where you are. Salisbury by Honeywell is there for you when you need us most.

To find your local distributor or representative, please visit our website to get up-to-date contact information.
Visit www.salisburybyhoneywell.com

SALISBURY BY HONEYWELL IS AVAILABLE WORLD-WIDE.

Salisbury by Honeywell has become a world leader in the manufacture and distribution of personal electrical safety products. No matter where you are in the world, Salisbury has you covered.

To find your international representative, please visit our website to get up-to-date contact information.
Visit www.salisburybyhoneywell.com

SALISBURY by Honeywell
101 E. Crossroads Pkwy., Ste. A Bolingbrook, IL 60440 toll free ph (USA):877.406.4501 toll free fax (USA):866.824.4922 ph:630.343.3800

SALISBURY BY HONEYWELL LINE EQUIPMENT

Salisbury by Honeywell has been setting industry standards since 1855. For over 150 years, Salisbury by Honeywell has been the name an entire industry trusts to provide the finest safety products available. Salisbury by Honeywell pioneered the manufacturing of linemen's Rubber Protective Equipment in the early 1920's.

Back in the early 1900's, Salisbury was approached by a local utility in the Chicago area about general safety. The question raised was how to create a safer working environment for linemen working on energized lines. Salisbury worked with the local utility by taking garden hose and cutting them lengthwise in a way that would cover the lines. These hoses were then secured by electrical tape and this led to the Salisbury patent of line hose in 1924. Over the years, line hose has evolved into the high-quality SALCOR rubber product you have come to expect.

Today, **Salisbury by Honeywell is the leader in Personal Electrical-Safety Protection**. We know that lives depend on the quality of our products, Salisbury by Honeywell's production facilities are **all ISO 9001:2008 registered** and are equipped and staffed to manufacture products which conform to the highest possible standards. This has allowed Salisbury by Honeywell to become the **world-wide leader in electrical safety equipment**. Salisbury by Honeywell has three plants which manufacture Personal Protective Equipment, Hot Line Equipment, and SALVAR® Polymer Insulators. Salisbury by Honeywell produces its rubber products in its own plants using four methods of rubber manufacturing: Injection Molding, Compression/ Transfer Molding, Extruding and Dipping. Salisbury by Honeywell's dedication to quality has also been carried over to the manufacturing of Hot Line Tools and SALVAR Insulators. As a result, **the name Salisbury by Honeywell on safety products is your assurance that you are using the finest equipment available for the job**.

1855	Founded in Chicago by John B. Idson. First organization in the Mid-West serving as an independent rubber products dealer.
1871	After a complete loss in the great Chicago Fire, organization opens with a belting and hose line of products. Company becomes Salisbury & Cline.
1880	Company becomes W.H. Salisbury & Co.
1902	Established leather belt factory
1902	Linemen regularly use W.H. Salisbury & Co. garden hoses slit lengthwise and secured with electrical tape as personal protective equipment.
1904	W.H. Salisbury & Co. incorporates
1912	Organized electrical safety movement begins and creates Safety Departments and employs Safety Inspectors.
1915	First molded Rubber Insulating Blanket made by W.H. Salisbury & Co.
1919	A rubber mill was erected to manufacture molded and extruded rubber products.
1921	A local utility discusses lineman safety needs with W.H. Salisbury & Co. after a fatal accident occurs.
1922	Manufacturing of full utility line of products begins.
1922	W.H. Salisbury & Co. first perfects and begins to offer Rubber Insulating Line Hose.
1923	W.H. Salisbury & Co. first perfects and begins to offer Insulator Hoods.
1924	W.H. Salisbury & Co. patents Line Hose design
1926	W.H. Salisbury & Co. patents Insulator Hood design
1929	Rubber mill and belt factory were expanded and an adjoining building, including warehouse and offices, was constructed.
1929	W.H. Salisbury & Co. patents Insulating Stool
1932	W.H. Salisbury & Co. patents Rubber Insulating Sleeve design
1933	Began distributing industrial rubber goods as well as continuing manufacturing.
1941	W.H. Salisbury & Co. patents Leather Protectors for Lineman's' Rubber Gloves
1943	W.H. Salisbury & Co. patents Coupling for Linemen's Protective Devices
1948	Charleston, SC factory established manufacturing insulating gloves
1960	W.H. Salisbury & Co. patents Protective Device design
1960	Addison, IL plant opens in early 1960's
1962	W.H. Salisbury & Co. patents Protective Cover design
1972	Skokie, IL plant and offices open
1980	Grounding equipment, hot sticks and insulators are added to product line in the 1980's
1999	North Hand Protection and W.H. Salisbury & Co. hand protection merge under the Salisbury name
2001	Arc Flash Protection garments and equipment added to product line
2005	W.H. Salisbury & Co. patents Insulating Blanket design
2005	Company becomes Salisbury Electrical Safety, LLC
2006	Salisbury Electrical Safety, LLC patents Locking Clamp Assembly design
2006	Salisbury Electrical Safety, LLC patents Clamp Pin for Use by Electrician os Electrical Line workers
2007	Salisbury Electrical Safety, LLC patents Rubber Insulating Blanket & Method
2008	Salisbury Electrical Safety, LLC becomes Salisbury by Honeywell.
2009	Salisbury by Honeywell moves Chicago, IL manufacturing plant and Skokie, IL corporate offices to a new facility in Bolingbrook, IL

Caution

Salisbury by Honeywell Line Equipment should only be used by electrical workers who have been thoroughly trained in its correct and safe use. Training should be conducted in accordance with the employer's work procedures and standards.

Our Warranty

Salisbury by Honeywell Line Equipment is warranted to be free from defects in materials and workmanship, and to meet the requirements of current ASTM standards at time of shipment. Our only obligation will be, at our option, to replace any portion proving defective or to refund the purchase price thereof. The buyer assumes all other risk, if any, such as the risk of any direct, indirect or consequential loss or damage arising out of the use of, or inability to use, these products.

THIS Wa RRan Ty IS Ex Clu SIv E and In l IEu OF THE Wa RRan TIES OF mERCHanT abIlITy, FITnESS FOR PaRTICulaR PuRPOSE and all OTHER WaRRanTIES, ExPRESSEd OR ImPlIEd,andmaynOT bEvaRIEd OR ExTEndEd ExCEPT In WRITIng by an auTHORIzEd OFFICIal OF SalISbuR y.

ASTM Specifications for Salisbury Equipment

Gloves, Sleeves and Footwear	
ASTM D120	Standard Specification for Rubber Insulating Gloves
ASTM D1051	Standard Specification for Rubber Insulating Sleeves
ASTM F696	Standard Specification for Leather Protectors for Rubber Insulating Gloves and Mittens
ASTM F496	Standard Specification for In-Service Care of Insulating Gloves and Sleeves
ASTM F1116	Standard Test Method for Determining Dielectric Strength of Dielectric Footwear
ASTM F1117	Standard Specification for Dielectric Footwear
Insulating Blanket, Matting and Sheeting	
ASTM D 178	Standard Specification for Rubber Insulating Matting
ASTM D1048	Standard Specification for Rubber Insulating Blankets
ASTM F479	Standard Specification for In-Service Care of Insulating Blankets
ASTM F2320	Standard Specification for Rubber Insulating Sheeting
ASTM F1742	Standard Specification for PVC Insulating Sheeting
ASTM F2676	Test Method for Determining the Protective Performance of an Arc Protective Blanket for Electric Arc Hazards
Line Hose and Covers	
ASTM D1049	Standard Specification for Rubber Insulating Covers
ASTM D1050	Standard Specification for Rubber Insulating Line Hose
ASTM F478	Standard Specification for In-Service care of Insulating Line Hose and Covers
Hotstick Grounds and Bypass Jumpers	
ASTM F711	Standard Specification for Fiberglass Reinforced Plastic (FRP) Rod and Tube used in Live Line Tools
ASTM F1825	Standard Specification for Clampstick Type Live Line Tools
ASTM F855	Standard Specification for Temporary Protective Grounds to be used on De-energized Electric Power Lines & Equipment
ASTM F2321	Standard Specification for Flexible Insulated Temporary By-Pass Jumpers
ASTM F2249	Standard Specification for In-Service Test Methods for Temporary Grounding Jumper Assemblies Used on De-Energized Electric Power Lines & Equipment
Plastic Equipment	
ASTM F712	Standard Test Methods and Specifications for Electrically Insulating Plastic Guard Equipment for Protection of Workers
Inspection	
ASTM F1236	Guide for Visual Inspection of Electrical Protective Rubber Products

Applicators, SU System...A-13
ASTM Chart, labeling..... E-2

Bags
Glove..... E-11
Line Hose X-3
Line & Pole Guards C-10
Sleeve..... E-15
Tool X-3
Bandages, Cable..... X-4
Barrier, Insulating.....C-10
Barrier, Switch C-9
Blankets.....
Arc Suppression B-12
Eyelet..... B-3
Lo-Volt & Zip Style..... B-6
Roll Blankets B-7
Slotted B-4
Switchboard/URD..... B-11
w/out Eyelets..... B-5
Boots F-3-6
Brushes, Cleaning.....H-23
Buckets, Tool..... X-3
Buttons,
Blanket..... B-9
Sleeve..... E-15

Cable,
Jumper..... G-9
Grounding H-17
Cable End Caps.....A-12
Canister, Blanket B-10
Clamps, Grounding
Ball & Socket System...H-14,15
"C" H-5-9
Cable Penetrating H-16
Cutout.....H-16
Duck Bill.....H-4
Flats, Angles & Rounds..H-12,13
Hanger Studs.....H-20
Pressure Terminal H-11
Stringing H-16
Substation Buses H-10
Cleaners E-18
Covers
Bushing.....D-3
Conductor, plastic C-6
Conventional, pin.....A-6,7
Elbow C-11
Insulator.....A-10,11
Lightning Arrester.....A-12
Meter Terminal.....A-14
Pole bracket C-11
Spade.....A-14
Stinger D-5
SU System Post & Pin.....A-10,11
Cross Arm Guards, Plastic ...C-7
Flexible A-6,7
Cut-Out Covers A-6,7
Dead End Protectors
Conventional A-6
SU System A-9
Elbows, Grounding H-31

Ferrules, Cable..... G-9
Grounding H-18
Jumper..... G-10
Plain H-19
Footwear..... F-3-6

Gloves
High Voltage E-6, 7
Low Voltage..... E-5
Selection E-5
Rubber Insulating E-5-7
Glove Dust..... E-18
Glove Inflators..... E-4
Glove Liners..... E-16
Glove Protectors.....
Leather, Primary..... E-8-10
Mitten E-10
Work E-17
Salpol E-17
Grounding
Cable.....H-17
Clamps H-4-20
Clusters.....H-26-31
Pole Mounted Bars H-21
Sets, Jumper H-3

Harness, Sleeve..... E-15
Hook, Belt X-5
Hot Sticks
Clampsticks I-4
Sleeve Splice I-7
Storage..... I-9
Switch Stick I-5-7
Universal Fittings..... I-10,11
Universal Switch Stick..... I-5,7

Instant Insulation D-6
Insulators, SALVAR®
Dead End/Suspension....J-4,5
Jumpers, Grounding H-3
Jumpers, Insulated
Cables G-9
Clamps G-4-7
Connector Link..... G-7
Parking Stand..... G-7
Stirrup Clamp G-7
Sure-Lok®..... G-4

Line Guards, Hard Cover
Link Guards.....C-5
Versa Guards C-5
Line Hose
Bags X-3
Conventional Style A-4,5
SU System, Extd Lip.....A-8

Magnetic Blanket Button.. B-9
Matting, Switchboard..... B-11

Pins, Blanket Clamp..... B-8
Pole Guards C-4
Pots, Compound X-4
Roll-ups
Blanket..... B-10
Sleeve..... E-15

Saddle, Insulating..... X-4
Silicone Spray E-18
Sleeves, Insulating..... E-12-14
Spiking Tool I-12
Straps .....
Dead End Protector A-6,7
Sleeve..... E-15
Ty Straps B-9
Static Discharge Stick..... I-8
Substation Cover C-8,9

Tagging Device.....A-14
Tool Holders..... I-9

Voltage Detector.....K-3-4

CONTENTS

A. LINE HOSE & COVERS

B. BLANKETS

C. PLASTIC GUARDS & COVERS

D. OUTAGE PROTECTION

E. GLOVES & SLEEVES

F. DIELECTRIC BOOTS

G. INSULATED JUMPERS

H. GROUNDING EQUIPMENT

I. HOT STICKS & TOOLS

J. INSULATORS

K. VOLTAGE DETECTORS

X. ACCESSORIES

LINE HOSE & COVERS

LINE HOSE & COVERS

FAQ

Q: What is SALCOR® Rubber and why does Salisbury use it to make their line hose products?

A: SALCOR Rubber is a TYPE II rubber that remains flexible in cold weather and is resistant to ozone and UV rays. Salisbury's exclusive SALCOR Rubber is the preferred material for line hose and other insulating products because it easily withstands the elements and does not lose its flexibility or insulating properties.

HISTORY

Leading the industry with over ninety years of Research and Development

Filed: United States Patent Office, December 21, 1922 Serial No 605,340

"To all whom it may concern:Be it known that I, Moses B. Salisbury, a citizen of the United States, and a resident of Chicago, in the county of Cook and State of Illinois, have invented an Improved Protective Insulating Sleeve, of which the following is a specification. . ."

This application, one of hundreds filed in the US Patent Office for Salisbury, proved to be the most effective device for protecting linemen from accidental contact with energized lines, and is still regarded as indispensable to the electrical industry today.

With over ninety years of research and development on linemen's protective equipment, Salisbury offers the most comprehensive line of protection up to 69 kV in the industry.

NOTE

All Salisbury Covers and Protective Equipment are designed for personal protection only. They are not to be used for mechanical protection.

LINE HOSE SELECTION CHART

The connector, formed at one end, receives and overlaps the end of an adjoining hose for a distance of 6.5” (165mm).

Use the chart below to determine the maximum conductor diameter recommended for use with each size line hose. For ease of installation and to minimize the potential of flashover through the overlapping lips, line hose is always sized larger than the maximum conductor diameter.

Salisbury Line Hose is available in four ASTM D1050 styles, as shown below:

Style a
Class 2 & 3
Straight Conventional

Style b
Class 2 & 3
Connector End Conventional

Style C
Class 4
Extended Lip Straight

Style d
Class 4
Extended Lip Connector End

Line Hose Size Selector Chart

I.D. of Line Hose in. (mm)	Conductors and Diameters in. (mm)							
	4/0 .46 (12)	266,800 .609 (15.5)	336,400 .677 (17)	477,000 .793 (20)	556,500 .858 (22)	795,000 1.028 (26)	954,000 1.126 (29)	1,351,500 1.34 (35)
1 (25)	20kV Conventional							
1 1/4 (31)	20kV Conventional							
1 1/2 (38)	30kV Conventional							
1 1/2 (38)	40kV SU System							
2 (51)	30kV Conventional							
2 (51)	40kV SU System							
2 1/2 (64)	30kV Conventional							
2 1/2 (64)	40kV SU System							

CONVENTIONAL SYSTEM

Conventional Style line Hose is available in orange Type II SALCOR®. SALCOR remains flexible even in cold weather and it is not damaged by ozone or ultraviolet rays. Each line hose has Salisbury's RIB-GRIP Locking System. The straight or connector end style is available in three sizes: 1" and 1.25" I.D. rated at 17kV, Class 2 and 1.5" I.D. rated at 26.5kV, Class 3.

Straight style SalCOR hose is also available in 2" or 2.5" I.D. rated at Class 3.

Conventional line Hose Connectors are made from Type II orange SALCOR and can be used on 1", 1.25", or 1.5" I.D. conventional line hose. To connect 2" and 2.5" I.D. conventional line hose, use the SU System Connector.

OR150-3

OR125-45C

ORC125

The tightest grip in the industry.
The self-locking lip, Salisbury patented, prevents line hose from coming off the conductor *after* an installation is complete. Often, as a lineman is working on an installation and making adjustments, the angle of connection shifts, causing line hose and covers to separate. To prevent this, Salisbury developed an ingenious solution for ensuring that any two protective devices would hold together yet still be easy for a lineman to assemble and take apart.

RIb gRIP® construction takes advantage of rubber's natural tendency to grip and tighten its grip through compression. By creating curving rib configurations slit at a specific angle, two pieces easily slip together but resist coming apart. To quickly disengage the lineman needs only to compress the rubber on either side.

RIB GRIP Locking System

Sectional view of typical insulator cover showing arrangement of ribs. Ribs are engineered to grip the serrations on its corresponding line hose, regardless of angle.

A row of serrations on both sides of connector line hose grips snugly inside the large arm of insulator covers.

Saw-tooth serrations on the ends of line hose are angled to make it easy to insert, but resist coming apart.

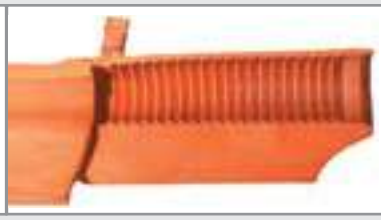

Connector end line hose with rubber ribs that grasp tightly and hold an adjoining length of hose.

LINE HOSE & CONNECTORS

CONVENTIONAL SYSTEM

Cat. No.	ASTM Class	Type	Dimensions I.D. x Length in. (mm)	Weight ea. lbs. (kgs)
SALCOR® Straight Line Hose				
OR100-3	2	II	1" x 3' (25 x 915)	3 (1.4)
OR100-45	2	II	1" x 4.5' (25 x 1372)	4 (1.8)
OR100-6	2	II	1" x 6' (25 x 1820)	5.5 (2.5)
OR125-3	2	II	1.25" x 3' (31.5 x 915)	4 (1.8)
OR125-45	2	II	1.25" x 4.5' (31.5 x 1372)	6 (2.7)
OR125-6	2	II	1.25" x 6' (31.5 x 1820)	7.5 (3.4)
OR150-3	3	II	1.5" x 3' (40 x 915)	5 (2.3)
OR150-45	3	II	1.5" x 4.5' (40 x 1372)	7 (3.2)
OR150-6	3	II	1.5" x 6' (40 x 1820)	9.5 (4.3)
OR200-3	3	II	2" x 3' (50 x 915)	5.5 (2.5)
OR200-45	3	II	2" x 4.5' (50 x 1372)	8 (3.6)
OR200-6	3	II	2" x 6' (50 x 1820)	11 (5.0)
OR250-3	3	II	2.5" x 3' (63 x 915)	7 (3.2)
OR250-45	3	II	2.5" x 4.5' (63 x 1372)	10.5 (4.8)
OR250-6	3	II	2.5" x 6' (63 x 1820)	14 (6.4)
SALCOR Connector End Line Hose				
OR100-3C	2	II	1" x 3' (25 x 915)	3.5 (1.6)
OR100-45C	2	II	1" x 4.5' (25 x 1372)	5 (2.3)
OR100-6C	2	II	1" x 6' (25 x 1820)	6.5 (2.9)
OR125-3C	2	II	1.25" x 3' (31.5 x 915)	4.5 (2.0)
OR125-45C	2	II	1.25" x 4.5' (31.5 x 1372)	6.5 (2.9)
OR125-6C	2	II	1.25" x 6' (31.5 x 1820)	9 (4.1)
OR150-3C	3	II	1.5" x 3' (40 x 915)	6 (2.7)
OR150-45C	3	II	1.5" x 4.5' (40 x 1372)	8 (3.6)
OR150-6C	3	II	1.5" x 6' (40 x 1820)	9 (4.1)
Line Hose Connectors				
ORC100	2	II	1" x 12" (25.4 x 305)	2.5 (1.1)
ORC125	2	II	1.25" x 12" (32 x 305)	3.5 (1.6)
ORC150	3	II	1.5" x 12" (38 x 305)	3 (1.4)

All Line Hose complies with current ASTM D1050 specifications.

CONVENTIONAL SYSTEM

Insulator Covers, in orange, weather resistant Type II SALCOR®, are used with conventional line hose to cover pin-type insulators. All covers feature RIB-GRIP construction to lock to the underside of the insulators. The large diameter arm overlaps the small arm of the adjoining cover on double arm constructions which provides complete insulation at the joint regardless of the varying distance between pins.

dead End Protectors cover 4.25" and 6" bells or polymer insulators with a skirt diameter of less than 6". The protectors are made from orange Type II SALCOR with RIB-GRIP construction. **OR101** has outer ribs that allow it to be used with 2" and 2.5" I.D. Conventional Line Hose when using the UC2 connector. The smaller **OR114** may also be used to cover transformer bushings up to 4.75" in diameter. **OR124** can cover polymer insulators up to 4.75" in diameter and 25" overall length including hardware. Replacement Straps are available.

To work on live lines safely, conductors encased in a line hose should never be placed directly on a cross arm. **Cross arm Covers** reduce electrical stresses on line hose or jumpers. Cross Arm Covers fit standard cross arm pin spacing and each unit has interior ribs to minimize shifting on the arm.

Flexible **Cutout Covers** can be used for overhead cutouts as well as for underground pad-mount applications. Cutout Covers comply with the current ASTM D1049 (ASTM Specifications for Rubber Insulating Covers) specifications.

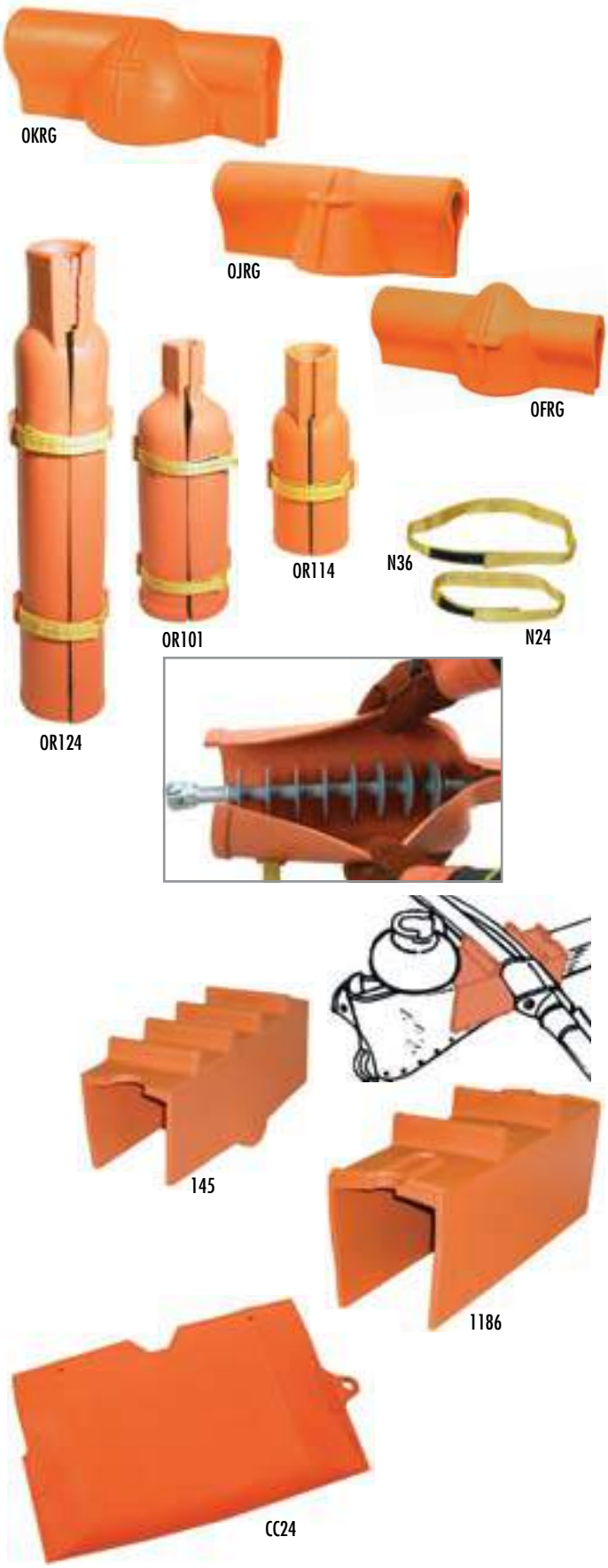

CONVENTIONAL SYSTEM

Cat. No.	Class	Description in (mm)		Overall Dimensions in (mm)	Weight ea. lbs. (kgs)
		for use with			
INSULATOR COVERS		Insulator Class	Line Hose Size		
OFRG	2	55-1/2/3	1" (25.4)	14.5" x 5" (368 x 127)	5 (2.3)
OJRG	2	55-4	1" (25.4)	16" x 6.5" (406 x 165)	6 (2.7)
OKRG	3	55-5	1.25", 1.5" (32 , 38)	16" x 8" (406 x 203)	7 (3.2)
		for use with			
DEAD END PROTECTORS		Bell Size	Line Hose Size		
OR101	2	2-6"(152.4)	1" (25.4)	6.5" x 23" (165 x 584)	10 (4.6)
OR114	3	1-4.25" (108)	1.5" (38)	4.75" x 14" (121 x 356)	4 (1.8)
OR124	3	2-4.25" (108)	15" (38)	4.75" x 29" (121 x 737)	7.5 (3.4)
CROSS ARM COVERS		Use on Cross Arms up to			
145	2	4" x 4.5" (102 x 114)		14.5" x 4.63" x 4.15" (368 x 117 x 105)	3 (1.4)
1186	4	5.5" x 6" (140 x 152)		17.0" x 6.0" x 5.5" (432 x 152 x 140)	5 (2.3)
CUTOUT COVERS					
CC24	2			24" x 15" x 3.5" (600 x 376 x 88)	5 (2.3)
CC30	4			30" x 20" x 7" (750 x 500 x 175)	10 (4.5)
REPLACEMENT STRAPS					
N24		For 114 & 124 Series		.75 x 30 (18 x 588)	2 oz. (56.7 g)
N36		For 101 Series		.75 x 36 (18 x 882)	2 oz. (56.7 g)

All covers comply with current ASTM D1049 specifications.

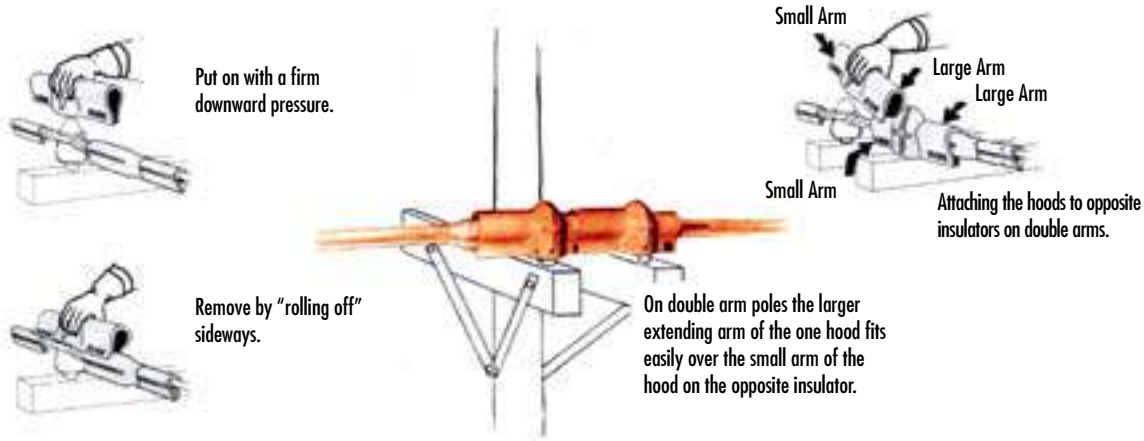

EXTENDED LIP SU SYSTEM

The **Extended lip Su System** is the only complete flexible cover-up available for use on voltages through 34.5kV. Extremely versatile, it may be installed by hand, wearing rubber insulating gloves, from an insulated aerial device or platform, or with hot sticks using the SU applicators.

Manufactured from superior SALCOR® Type II elastomer, it is resistant to the effects of ozone and ultraviolet deterioration. It remains flexible even at sub-zero temperatures.

Salisbury's RIB GRIP® construction securely interlocks with its corresponding covers and connectors. Tapered lips facilitate easy starting on the conductors. The contour cut ends accommodate the skirts of pin type insulators and permit the hose to cover the line snug to a saddle or clamp.

Available as **Straight line Hose** or with a **Connector End** for easier connection of line hose and covers. A lifting eye is molded on the connector end for removal with hot sticks. Line hose is also available with the #2323 Shot Gun Eye Assembly. Just add a suffix of "E" to the catalog number to order the #2323 Shot Gun Assembly installed on the hose or order the #2323 separately.

Su System Connectors are made from orange SALCOR Type II. RIB-GRIP construction is used to ensure a strong lock to the straight lengths of SU System Line Hose and covers. The **uC2** is used to connect Extended Lip Hose to PTHL and LRG Insulator Covers, OR134 Dead End Protectors, and 2" (51mm) and 2.5" (64mm) SU System and Conventional Line Hose.

SU150-3C

SU150-45

UC

Cat. No.	Dimensions -- in. (mm) I.D.	Length	Weight ea. lbs. (kgs)
STRAIGHT LINE HOSE Class 4, Type II			
SU150-3	1.5" (38)	3' (915)	6 (2.7)
SU150-45	1.5" (38)	4.5' (1372)	8.5 (3.8)
SU150-6	1.5" (38)	6' (1829)	12 (5.4)
SU200-3	2" (51)	3' (915)	6 (2.7)
SU200-45	2" (51)	4.5' (1372)	10 (4.5)
SU200-6	2" (51)	6' (1829)	14 (6.4)
SU250-3	2.5" (63.5)	3' (915)	7 (3.2)
SU250-45	2.5" (63.5)	4.5' (1372)	11 (5.0)
SU250-6	2.5" (63.5)	6' (1829)	15 (6.8)
CONNECTOR END LINE HOSE Class 4, Type II			
SU150-3C	1.5" (38)	3' (915)	7 (3.2)
SU150-45C	1.5" (38)	4.5' (1372)	9 (4.1)
SU150-6C	1.5" (38)	6' (1829)	12 (5.4)

SU SYSTEM CONNECTORS Class 4, Type II ASTM D1049			
	Length x Height	Use w/ Line Hose I.D.	
UC	10.5" x 6" (263 x 150)	1.5" (40)	2 (.9)
UC2	10.5" x 7.75" (263 x 194)	2"&2.5" (51&64)	3 (1.4)

Add Suffix "E" to Catalog Number to order with #2323 Shot Gun Eye Assembly (see page A-13).

Complies with current ASTM D1050 specifications.

DEAD END PROTECTORS

EXTENDED LIP SU SYSTEM

dead End Protectors quickly cover dead end bells or polymer insulators providing complete electrical protection for Class 3 and Class 4 applications.

Easily installed and removed from an insulated platform or aerial device with rubber gloves or SU System Applicators.

All styles have RIB-GRIP® construction to interlock with 1.5" (38mm) I.D. line hose. The Class 3 U106 and U110 must be used with Connector End style line hose or separate Line Hose Connectors. OR134, Class 4, accepts Straight Line Hose. The outer ribs interlock with 2" and 2.5" I.D. line hose when the UC2 SU System Connector is used.

OR134

RIB-GRIP® Construction

U110

Cat. No.	ASTM Class / Type	Fits Bell Size in. (mm)	Dimensions in. (mm) I.D. body	Overall Length	Color	Weight ea. lbs. (kgs)
DEAD END PROTECTORS						
OR134	4 / II	3-4.25 (108)	5 (127)	37 (940)	Orange	13 (6)
Add Suffix "E" to Catalog Number to order with #2323 Shot Gun Eye Assembly (see page A-13).						
U106	3 / II	2-6 (152)	7 (178)	28.5 (724)	Black	6 (2.7)
U110	3 / II	2-10 (254)	10.5 (267)	28.5 (724)	Black	10 (4.5)
Add Suffix "E" to Catalog Number to order with #2340 Shot Gun Eye Assembly (see page A-13).						

All Protectors comply with current ASTM D1049 specifications.

INSULATOR COVERS

EXTENDED LIP SU SYSTEM

The **uH Pin-Type Cover** covers insulators up to ANSI standard C29.5 Class 5. The sides are cut to be used on small insulators without resting on the crossarm. When covering a 7" diameter insulator on a double arm construction, the ends of the cover will meet flush on 10.5" pin centers.

The **lRg Su System Pin-Type Cover** fits insulators 10.5" (267mm) in diameter and is used with 2.5" (64mm) Class 4 Extended Lip SU System Line Hose. Always use clamp pins to secure the device into position. Pinning rings have been placed on the cover's arms to prevent separation.

Post-Type Insulator Covers interlock with 1.5" (38mm) Class 4 Extended Lip SU System or Conventional Line Hose. The **PTHS** for insulators up to 12" (305mm) and the **PTHl** for insulators up to 16" (406mm) in height. The **PTHl** cover also has external ribs on the ears which secures 2.5" (64mm) I.D. line hose. Always use clamp pins to secure the device into position.

The Class 4 **mRg universal Cover** covers pin-type insulators through 8.5" (216mm) diameter and 13.8kV post-type insulators. A trim bead permits use on both 35kV and 15kV crossarm construction.

The **uSC Stirrup Cover** is a lightweight cover that can be installed using rubber gloves or a hot stick. The USC also feature RIB-GRIP construction and is meant to be used with Extended Lip SU Systems or Conventional Line Hose.

All covers are made from orange SALCOR® and feature RIB-GRIP® Construction. They can be installed with a hot stick or rubber gloves. All covers comply with ASTM D1049 specifications.

UH

LRG

PTHS

PTHL

MRG

USC

USC (side view)

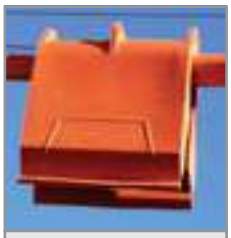

Application of USC.

INSULATOR COVERS

EXTENDED LIP SU SYSTEM

Cat. No.	ASTM Class / Type	Fits Line Hose in (mm)	Fits Insul. Max Dia in (mm)	For Use w/ Insul. Class	Overall Dimensions-in.(mm) I.D. body	Height	Weight ea. lbs. (kgs)
PIN TYPE Insulator Covers							
LRG	4 / II	2.5 (63)	10.5 (263)	55-6	12 (305)	16 (400)	8 (3.6)
MRG	4 / II	1.5-2.5 (40-63)	8.5 (213)	Pin Type 55-5 Post Type 13.2kV F Neck Post Type 13.2kV C Neck	9 (221)	12.25 (306)	7 (3.2)
Add Suffix "E" to Catalog Number to order with #2359 Shot Gun Eye Assembly (see page A-13).							
UH	3 / II	1.5 (40)	7 (175)	55-1, 2, 3, 4, 5	7.5 (184)	12 (300)	6 (4.4)
POST TYPE Insulator Covers							
PTHL	4 / II	1.5-2.5 (40-63)	6.5 (163)	57-2	7 (172)	16 (400)	8 (3.6)
PTHS	4 / II	1.5 (40)	7 (175)	57-2	7.5 (184)	12 (300)	4 (1.8)
Stirrup Cover							
USC	4 / II	1.5 (40)			14 (263)	15.5 (388)	5 (2.3)

All Covers comply with current ASTM D1049 specifications.

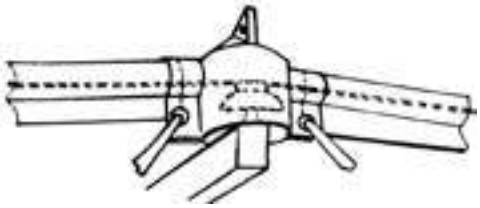

Pin Type Insulator Cover - LRG or MRG Line Hose is inserted in the ears of the cover.

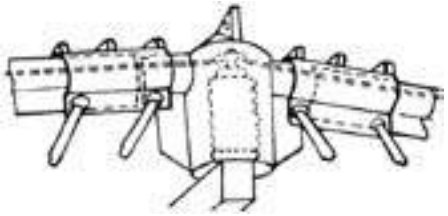

Post Type Insulator Cover PTHL 2.5" (64mm) Line Hose held in place with UC2 Connector.

CABLE END CAPS & ARRESTER COVERS

Cable End Caps are applied with rubber gloves. They are used on high voltage distribution cable ends found in vaults, cubicles and substations when cable remains energized during work. Cable End Caps are made from Type II orange SALCOR®.

Self-securing Cable End Caps for Underground Distribution are rated at 20kV, and have a minimum wall thickness of .25". They keep moisture and contamination off trimmed cable ends. The self-securing slot keeps the cable locked safely inside the end cap. These Cable End Caps are applied with rubber gloves.

lightning arrester Covers are made from Type II orange SALCOR . The slot allows the cap to fit directly over the energized lightning arrestor and the line connection. Lightning Arrester Covers can be applied with rubber gloves or a hot stick.

Clear Cable Covers are made from clear PVC round or oval tube. Each cover has a grip all handle attachment for installation with an insulated grip all hotstick.

Clear PvC Stress Cone Cover has a grip all attachment that allows this cover to be installed with an insulated grip all hotstick. The inspection window can be opened for testing with a voltage sensor.

Cat. No.	ASTM Class	Type	Dimensions in. (mm) I.D. x Length	For use w/ Cable Size	Weight ea. lbs. (kgs)
SELF-SECURING CABLE END CAPS					
117	2	II	1.38" x 10" (35 x 254)	#4/0 to 500 MCM	.50 (.23)
173	2	II	.81" x 6" (21 x 152)	#4 to #4/0 AWG	.25 (.1)
177	2	II	2.25" x 12" (57 x 305)	350 to 750 MCM	.75 (.35)
178	2	II	3.19" x 16" (81 x 406)	800 to 1000 MCM	1.5 (.7)
LIGHTNING ARRESTER COVERS					
536A	4	II	4.5 x 15 (113 x 375)	-	3 (1.4)
636A	4	II	5.5 x 22 (138 x 550)	-	5 (2.3)

These Covers comply with current ASTM D1049 specifications.

14200011

Cat. No.	Description	ASTM F712 Class / Rating kV	Dimensions Length in. / I.D. in. / O.D. in.	Weight lbs. (kgs)
CLEAR CABLE COVERS				
14200032P	2" ▲ PVC Cable Cover	2 / 14.6	20 / 2 / 2.38	1.5 (0.68)
14200033P	3" ▲ PVC Cable Cover	2 / 14.6	20 / 3 / 3.38	3.2 (1.45)
14200034P	4" ▲ PVC Cable Cover	2 / 14.6	20 / 4 / 4.38	4.3 (1.95)
14200036P	6" ▲ PVC Cable Cover	2 / 14.6	20 / 6 / 6.5	5.3 (2.41)
CLEAR PVC STRESS CONE COVER				
14200011	-	2 / 14.6	13 / 3 / 3.5	3 (1.36)

The Extended Lip SU System may be installed by using rubber gloves or hot sticks on distribution voltages up to 34.5kV.

The Shot Gun Eye Assembly for the SU System equipment may be purchased separately for installation on the appropriate cover-up device.

The addition of these eye assemblies enable all SU System equipment to be easily handled with a standard shotgun stick.

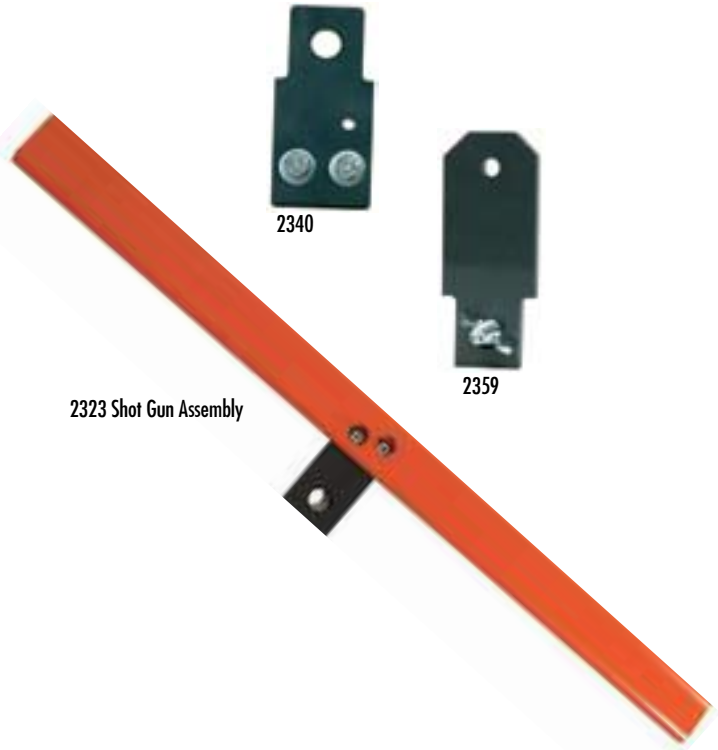

2323 Shotgun Assembly allows easy installation

2323 Shotgun Assembly attaches easily to SU Systems

Cat. No.	Description	For Use w/ Hot Stick Style	Weight ea. lbs. (kgs)
2323	Shot Gun Eye Assembly for SU Hose / OR134	Shot Gun	1 (.4)
2340	Eye Assembly for SU System D.E. Protectors	Shot Gun	.5 (.2)
2359	Eye Assembly for SU System Insulator Covers	Shot Gun	.5 (.2)

TH111

TD

Tagging Device fits over the head of switch sticks for application.

The Td Tagging device, made from molded orange SALCOR®, is used to tag opened disconnect switches. It allows "Hold" cards to be placed on the circuit and fits over the heads of 1-1/4" (32 mm) and 1-1/2" (38 mm) switch sticks.

The TH111 meter Terminal Cover is used to avoid accidental contact with energized parts on 100 and 200 Amp single phase meter sockets. Made of orange SALCOR.

THE SALISBURY ADVANTAGE

Spade Covers are easily installed to provide temporary insulation when working in padmount transformers and other electrical apparatus. If spade covers are securely held in place, they may be left on spades or connectors indefinitely for front end protection. The larger SC5, SC6, or SC6G are also used to cover primary elbows as well as the larger and longer multiple lead primary and secondary fittings and lugs used in underground enclosures and vaults. Molded from flexible SALCOR, they have excellent aging and weathering characteristics. The opening at the top end of the slot holds the cover on to the terminal. Wide lips extending along the slot provide additional protection over the connection.

SC5

Spade Cover Application

ADVANTAGE

SC6G

Cat. No.	Description / Dimensions in. (mm)	Weight ea. lbs. (kgs)
TAGGING DEVICE		
TD	7.25 (184) long slot: 2.13 x .63 (5 4 x 16) cup: 2.5 x 1.75 (64 x 44)	.25 (.1)
METER TERMINAL COVER		
TH111	3 x 3.5 x 1.5 (76 x 89 x 38)	1.6oz. (.05)
SPADE COVER - CLASS 2, TYPE II, ASTM D1049		
SC4	2.75 x 4.4 x 10.75 (70 x 112 x 273), 1 (25.4) Lip Extension	1.4 (.5)
SC5	3 x 6 x 10 (76 x 152 x 254), 2 (51) Lip Extension	2 (.9)
SC6	3 x 6 x 10 (76 x 152 x 254), 1.25 (32) Lip Extension	1.4 (.5)
SC6G	3 x 6 x 10 (76 x 152 x 254), 1.25 (32) Lip Extension	1.4 (.5)

BLANKETS

BLANKETS

FAQ

Q: How often do I need to test blankets?

A: Blankets issued for service need to be tested once a year. See ASTM D479 8.1 for testing requirements.

SALISBURY EXCLUSIVE

Only Salisbury formulates compounds, mixes, molds and tests blankets in our own ISO 9000:2008 registered facilities.

NOTE

General Care & Inspection of Salisbury Rubber Goods

Type I natural (non-ozone resistant) and **Type II SalCOR®** synthetic rubber (resistant to ozone) both provide electrical workers with the highest level of electrical insulating protection. However, in order to maintain this level of protection and ensure long life, it is essential that rubber goods are properly cared for. Before each use, rubber goods should be visually inspected for holes, embedded wires, rips or tears, ozone cutting, UV checking and signs of chemical deterioration. For additional information, refer to ASTM F1236, standard guide for visual inspection of electrical protective rubber products.

INSULATING BLANKETS

EYELET STYLE

THE SALISBURY ADVANTAGE

HIgH QualITy

Salisbury's Type II SalCOR® blankets are of the highest quality available today. They will hold their color and flexibility, and will maintain physical properties and dielectric strength, required by ASTM standard, in the field longer than any other blanket on the market.

OzOnE RESISTanT

The Orange SALCOR is manufactured from a well researched blend of prime EPDM, which is naturally resistant to Ozone. This blend of Prime EPDM offers superb flexibility; similar to that of a Type I natural rubber blanket. This ensures the Salisbury Type II SALCOR blanket will pass the ASTM D 1048 Ozone Tests both, Method A and Method B.

400E (27 x 36)

Reinforced Beaded Edge

Eyelet Style Insulating blankets were designed to be easily secured in place by using blanket pins, Snap Buttons or Ty-Straps *(available on page B-9)* Eyelet blankets are flexible and feature a reinforced beaded edge and eyelets for added strength and tear-resistance.

Our **zip-On Style (zip)** features one-inch wide strips of hook and pile double stitched to the blanket with nylon thread, so installation and removal is safe and fast.

1830S

Cat. No.	Eyelets/ Style	ASTM Class	Type	Size in. (mm)	Color	Weight ea. lbs. (kgs)
12	28	2	II	22 x 22 (559 x 559)	Black	3 (1.4)
13	28	4	II	22 x 22 (559 x 559)	Orange	3 (1.4)
13-10	10	4	II	22 x 22 (559 x 559)	Orange	3 (1.4)
400E	6	2	II	27 x 36 (686 x 914)	Black	6 (2.3)
1000E	6	4	II	27 x 36 (686 x 914)	Orange	6 (2.3)
1001E	6	4	II	27 x 36 (686 x 914)	Black	6 (2.3)
300E	6	2	I	36 x 36 (914 x 914)	Black	8 (3.6)
900E	6	4	II	36 x 36 (914 x 914)	Orange	8 (3.6)
901E	6	4	II	36 x 36 (914 x 914)	Black	8 (3.6)
1500	28	2	II	36 x 36 (914 x 914)	Black	8 (3.6)
1700	28	4	II	36 x 36 (914 x 914)	Orange	8 (3.6)
ZIP-ON STYLE						
183OS	Zip	4	II	18x36 (457x914)	Orange	3.5 (1.6)
900EV	Zip	4	II	36x36 (914x914)	Orange	8.5 (3.9)
1000EV	Zip	4	II	27x36 (686x914)	Orange	8.1 (3.7)

All blankets comply with current ASTM D1048 specifications.

INSULATING BLANKETS

SLOTTED STYLE

Slotted Style Insulating blankets are made of Type II SALCOR® rubber and designed for increased versatility and flexibility in special cover-up situations. Use for covering ridge pins, cross arms with insulators or any place a wire, pin or projection interferes with proper placement of other cover-up devices.

Three sizes are available with reinforced beaded edges and reinforced eyelets which can be secured with blanket pins, Snap Buttons or Ty-straps *(available on Page 9)*. Our 36”(914mm) slotted blanket is also available with 2” (51mm) or 4.5”(114mm) center holes and with hook and pile (Zip Style). Our 46”(1168mm) slotted blanket features extra thickness at the end of the slot for added strength.

Our **zip-On Style (zip)** features one-inch wide strips of hook and pile double stitched to the blanket with nylon thread, so installation and removal is safe and fast.

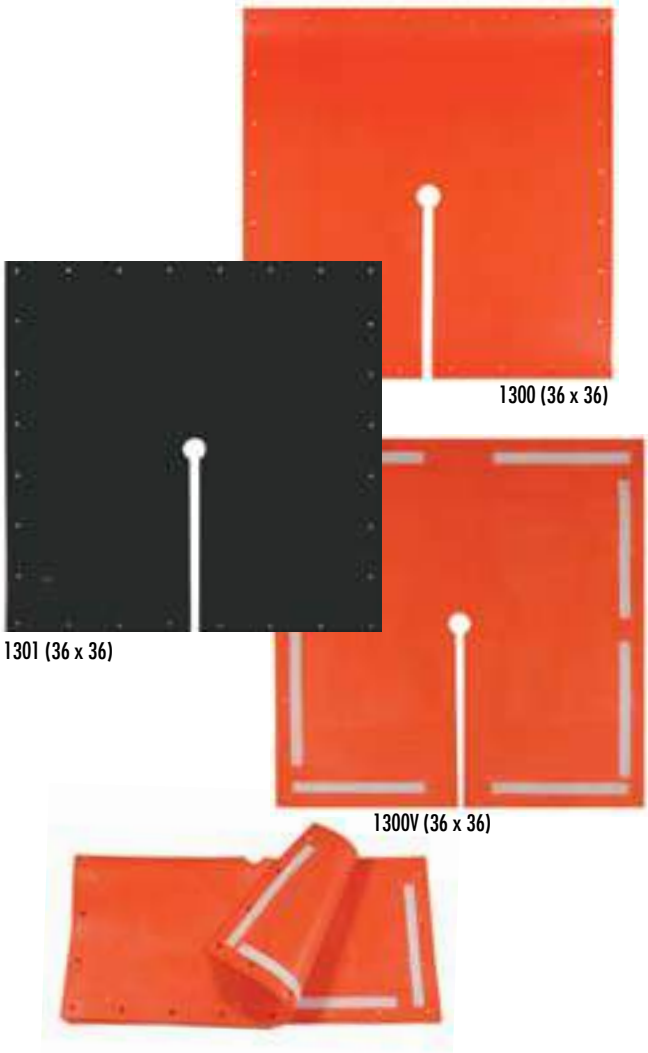

Cat. No.	Eyelets	ASTM Class	Type	Size in. (mm)	Color	Weight ea. lbs. (kgs)
14	28	2	II	22 x 22 (559 x 559)	Black	2.5 (1.1)
15	28	4	II	22 x 22 (559 x 559)	Orange	2.5 (1.1)
15-1	28	4	II	22 x 22 (559 x 559)	Black	2.5 (1.1)
1100	28	2	II	36 x 36 (914 x 914)	Black	7 (3.2)
1300	28	4	II	36 x 36 (914 x 914)	Orange	7 (3.2)
1301	28	4	II	36 x 36 (914 x 914)	Black	7 (3.2)
1302	2” hole	4	II	36 x 36 (914 x 914)	Orange	7 (3.2)
1304	4.5” hole	4	II	36 x 36 (914 x 914)	Orange	7 (3.2)
ZIP-ON STYLE						
1300V	Zip	4	II	36x36 (914x914)	Orange	7 (3.2)

All blankets comply with current ASTM D1048 specifications.

INSULATING BLANKETS

WITHOUT EYELETS

186 (18 x 36)

300 (36 x 36)

THE SALISBURY ADVANTAGE

COnSISTEnCy

The Salisbury blanket is manufactured from materials that are precisely measured in an automated weighing system to ensure batch-to-batch consistency.

valuE

SALCOR® blankets will last longer and provide maximum value and protection. Not all rubber blankets are manufactured equally. Ask for the best, ask for Salisbury's rubber insulating blankets.

Salisbury Insulating blankets without Eyelets are available in Class 2 and Class 4 in two types of material: Type I natural rubber, and Type II SALCOR, which is a highly flexible, corona-resistant polymer with excellent aging and weathering qualities.

Salisbury insulating blankets feature a reinforced beaded edge for added strength and tear-resistance.

Cat. No.	ASTM Class	Type	Size in. (mm)	Color	Weight ea. lbs. (kgs)
186	4	II	18 x 36 (457 x 914)	Orange	3.5 (7.7)
300	2	I	36 x 36 (914 x 914)	Black	8 (3.6)

All blankets comply with current ASTM D1048 specifications.

LOW VOLTAGE BLANKETS

WITH & WITHOUT HOOK AND PILE

low voltage Insulating blankets are made of Type II SALCOR® rubber. Insulating blankets are available with or without hook and pile (Zip) or Plain style, as noted in the chart below.

Covering energized equipment is easier than ever using Salisbury's Zip-On blankets. Our **zip-On Style (zip)** features one-inch wide strips of hook and pile double stitched to the blanket with nylon thread, so installation and removal is safe and fast. Zip-On blankets can be manufactured to fit special requirements. Contact your Salisbury representative for more information.

1212YLV

1212YLVNV

1212YLV
Back

Cat. No.	Style	ASTM Class	Type	Size in. (mm)	Color	Weight ea. lbs. (kgs)
1212YLV	Zip	0	II	12x12 (305x305)	Yellow	1 (.45)
1212YLVNV	Plain	0	II	12x12 (305x305)	Yellow	1 (.45)
1236YLV	Zip	0	II	12x36 (305x914)	Yellow	1.5 (.48)
1236YLVNV	Plain	0	II	12x36 (305x914)	Yellow	1.5 (.48)
1818YLV	Zip	0	II	18x18 (457x457)	Yellow	1.1 (.48)
1818YLVNV	Plain	0	II	18x18 (457x457)	Yellow	1.1 (.48)
1836YLV	Zip	0	II	18x36 (457x914)	Yellow	1.5 (.68)
1836YLVNV	Plain	0	II	18x36 (457x914)	Yellow	1.5 (.68)
3636YLV	Zip	0	II	36x36 (914x914)	Yellow	2.2 (1.0)
3636YLVNV	Plain	0	II	36x36 (914x914)	Yellow	2.2 (1.0)

All blankets comply with current ASTM D1048 specifications.

Installing a Zip-On Blanket

RLB1

RLBPVC1

APR00

Salisbury has gone to great lengths to protect workers from low voltage electrical hazards, by now offering insulating roll blankets and insulating aprons. Salisbury's insulating **Roll blankets** and **Insulating aprons** are made from a high strength fabric reinforced Type II rubber in unique colors making it easy to identify and highly visible in the work area. Salisbury's insulating Type II rubber Roll Blankets and Insulating Aprons, meet ASTM F2320 standards.

Salisbury's **Roll blanket** line includes a Class 1 (7,500v) **Clear PvC** material that permits complete visibility, yet provides the necessary insulating properties meeting ASTM F1742 standards.

Roll Blankets can be easily cut to size and fit for customized applications to each job.

The **Roll blankets** can be easily custom-cut to fit each application at the job site. This minimizes the number of different low voltage blankets sizes and shapes that would otherwise need to be carries from job to job. Each blanket comes in a convenient 36" wide roll, 30 feet in length.

All classes of Roll Blankets are easy to cut, and flexible to -40°F/C. Highly puncture and tear resistant, each class of blanket is also flame (self-extinguishing), oil, and ozone resistant.

The **Insulating apron** includes two Nomex (R) webbed bib straps and two Nomex waist straps with nonmetallic buckles. All the straps are attached with reinforced stitching and Nomex thread. The insulating apron has straps that can be buckled around the back and around the neck which gives wearers a comfortable and supportive fit. The straps are adjustable so that one size will fit most wearers. The apron measures 42" from the top of the bib and has a full width of 30" to wrap around the front of most workers. Use these aprons where there is a possibility of accidental contact with energized equipment or lines. These products are not intended for purposeful contact with energized equipment.

Cat. No.	ASTM Class	Type	Size feet (m)	Color	Weight ea. lbs. (kgs)
ROLL BLANKETS					
RLB00	00	II	3' x 30' (.9 x 9)	Brown	20 (9)
RLB0	0	II	3' x 30' (.9 x 9)	Yellow	26 (11.8)
RLB1	1	II	3' x 30' (.9 x 9)	Yellow / Orange	36 (16.4)
RLBPVC1	1	-	3' x 30' (.9 x 9)	Clear	36 (16.4)
RLBPVC1-48	1	-	4' x 30' (1.2 x 9)	Clear	48 (21.7)
INSULATING APRONS					
APR00	00	II	One Size Fits Most	Brown	1.95 (.88)
APR0	0	II	One Size Fits Most	Yellow	2.53 (1.15)
APR1	1	II	One Size Fits Most	Yellow / Orange	3.5 (1.59)

CLAMP PINS

In addition to other uses in the utility industry, **blanket Clamp Pins** can be effectively used to hold insulating blankets and rubber cover-up in place. Springs are used for tension while extra holes in the body of the pin are used to grip conductors and prevent line hose from sliding.

Clamp Pins help line hose from slipping

THE SALISBURY ADVANTAGE

Improved!

The Salisbury 21 blanket pin is more functional than ever. The new 21 pin has been improved to make it the most versatile pin on the market. Although the 21 pin always opened to accommodate just about any width needed, it has now been redesigned to open to a full 5 1/2 inches. That's the widest of any standard plastic pin in the industry. To accommodate application using a hot stick, the ends of the pin have been tapered to fit into the end of any brand clampstick. This allows the same 21 pin to be installed in line with the stick. For applications where a 90 degree angle of application and removal is necessary, the time proven HS21 pin fills the bill. Look for the new 21 pin to be supplied with your next pin order.

Blanket pins are made of fiberglass reinforced nylon or sliver-free hardwoods. Most pins have molded rubber tips to increase slip resistance.

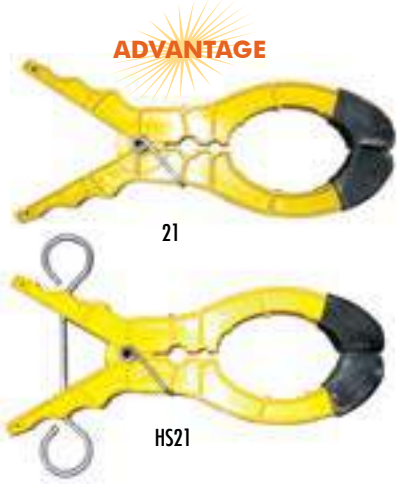

Salisbury 21 Blanket Pin

Cat. No.	Description	Length in. (mm)	Jaw Opening in. (mm)	Weight ea. lbs. (kgs)
20	Wood w/ pin boots	8.5 (216)	4.75 (121)	.33 (.15)
25	Wood w/o pin boots	7 (178)	1.6 (41)	.25 (.11)
26	Wood w/ pin boots	10 (254)	7 (178)	.5 (.23)
YN20	Wood w/ Sure grip	8.5 (216)	4.75 (121)	.33 (.15)
HS21	Nylon w/ pin boots	9.5 (241)	5 (127)	.37 (.17)
21	Nylon w/ pin boots	9.5 (241)	5 (127)	.37 (.17)

Optionally applied with Shotgun Stick

FASTENERS

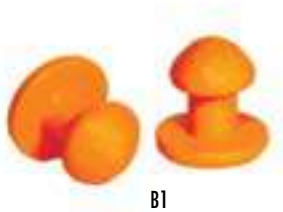

B1

blanket buttons are designed to secure eyelet-style insulating blankets. The **b1** button, made of yellow plastic, snaps through the eyelet with thumb pressure on the large head. The bright orange polystyrene **b23** two-way buttons are inserted into the eyelets for use with a shotgun clamp stick or standard-duty switch stick.

B23

magnetic blanket buttons are designed for use in eyelets of insulating blankets when covering energized portions in hard-to-cover areas like pad mounts, cubicles, switchboards and substations. Four permanent floating magnets are mounted between nickel-plated steel plates. May be applied manually, wearing rubber gloves, or with a shot-gun stick.

MB6

Ty-Straps are 14" (356mm) and 30" (762mm) long and made of 1 1/2" (38mm) wide strips of rubber with hook and pile fasteners affixed to each end. The worker simply wraps the Ty-Strap around the positioned blanket and presses the hook and pile ends together. *Contact your local Salisbury representative for custom length Ty-Straps.*

TY14

Cat. No.	Description	Weight ea. lbs. (kgs)
B1	Snap-Button, Orange	1 oz. (.03)
B23	Two-Way Button, Orange	1 oz. (.03)
MB6	Magnetic Blanket Button	7 oz. (.2)
TY14	Ty-Straps, 14" (356mm) long	2 oz. (.06)
TY30	Ty-Straps, 30" (762mm) long	4 oz. (.12)

BLANKET ACCESSORIES

STORAGE

blanket Canisters—molded in bright orange, hi-impact polyethylene—protect insulating blankets when not in use. A tight-fitting cap is secured to the canister with polypropylene rope.

THE SALISBURY ADVANTAGE

Salisbury's New P4H Blanket Canister revolutionizes the way you'll store your blankets. The new canister has a sturdier construction than the original P4, with integrated feet to keep the canister from rolling while being transported by truck or stored at the workplace. The new ergonomic handle runs the entire length of the canister, making lifting and carrying up to four 36 x 36" blankets much easier. Slots are provided within the canister to allow it to be secured in buckets or on trucks.

blanket Roll ups provide a safe and convenient means for protecting blankets from damage while in transport or storage. Ruggedly constructed of 18 oz. vinyl with side flaps to confine the blankets into position and prevent damage to the edges. Two heavy 33" web straps with buckles close the roll-up, and includes a web carrying handle.

STORAGE TIPS: *When more than one blanket is stored, the most convenient method of loading is to roll and insert each blanket into the canister independently. A single blanket can then be removed without removing the others. For maximum useful life, never fold, crease or compress insulating blankets while in storage.*

22

Cat. No.	Description	Fits Blanket Max Size in.(mm)	Dimensions in. (mm)	Capacity	Weight ea. lbs. (kgs)
P2	Canister	36 (914)	5 x 37 (127 x 940)	1-2 blankets	2 (.9)
P3	Canister	36 (914)	6 x 37 (152 x 940)	1-3 blankets	3 (1.4)
P4	Canister	36 (914)	7 x 37 (178 x 940)	1-4 blankets	3.5 (1.6)
P4H	Canister	36 (914)	7 x 37 (178 x 940)	1-4 blankets	3.5 (1.6)
P6	Canister	36 (914)	9 x 37 (229 x 940)	1-6 blankets	5 (2.3)
P3-47	Canister	46 (1168)	6 x 47 (152 x 1194)	1-2 blankets	4 (1.8)
22	Roll-up (vinyl)	22 (559)	56 x 42 (1651 x 1067)	1-4 blankets	1.5 (.68)
36	Roll-up (vinyl)	36 (914) or 46 (1168)	67 x 55 (1702 x 1397)	1-4 blankets	2.5 (1.1)
46	Roll-up (vinyl)	36 (914) or 46 (1168)	70 x 55 (1778 x 1397)	1-4 blankets	4 (1.8)

Switchboard matting is permanently placed in front of switchgear, motor control centers and other high voltage apparatus to provide personal protection for workers. It is also used when tending take-up and pay out reels and when adding or replacing conductors. Made from high quality Type II material, Class 2 matting is 1/4" (6.4mm) thick and is tested to 20kV, and Class 4 matting is 1/2" thick and tested to 40kV. Both Classes of matting comply with ASTM D178, Class 2 and Class 4 specifications. The corrugated surface acts as a safety tread while reducing the possibility of metal particles becoming embedded. Class 2 Switchboard matting is available in 25 yard rolls or custom cut to specified lengths, while Class 4 matting is sold in 20 yard rolls only.

Maximum Use AC Voltage Class 2, 17,000 volts; Class 4, 36,000 volts.

The **R96** vinyl/roll-up carrier is recommended as a ground barrier.

M24-2

Matting Cross-Section

R96

Cat. No.	ASTM Class	Type	Size in. (mm)	Weight ea. lbs. (kgs)
SWITCHBOARD MATTING				
M24-2	2	II	1/4 x 24 (6 x 610)	9 (4.1)
M30-2	2	II	1/4 x 30 (6 x 762)	12 (5.4)
M36-2	2	II	1/4 x 36 (6 x 914)	15 (6.8)
M48-2	2	II	1/4 x 48 (6 x 1219)	18 (8.2)
SWITCHBOARD MATTING				
M36-4*	4	II	1/2 x 36" x 60 feet long (12 x 914 mm x 18.3 m long)	684 (307.8)

All switchboard matting comply with current ASTM D178 standards
*Sold in full rolls only.

GROUND BARRIER		
R96	Carrier Vinyl Roll-Up / Ground Barrier	3.5 (1.6)

ARC SUPPRESSION BLANKET

ARC45-15

ARC45-40

Salisbury by Honeywell arc Protection blankets are now available in 4' x 5' and 4' x 8' sizes. Each size is available in 15kA or 40kA ratings. The 15kA blankets include convenient loops and the 40kA blankets include grommets to easily keep the blanket in place. These new blankets are sold individually or with a storage bag or storage bag and tie-strap kit.

The Arc Suppression Blanket is used as a barrier for protection from the explosive and incendiary effects of electrical arcs and flashes. These hazardous electrical discharges can be caused by faults in cables, in cable splices and joints, and at transformer terminals, or they may be generated by the operation of switch gear, circuit breakers and lightning arrestors. The blanket can be used for worker protection in underground vaults, switchyards, and other locations where electrical equipment poses a risk of exposure to explosive electrical discharges.

NOTE These products do not eliminate or reduce requirements for proper PPE for arc flash protection

WARNING
Because of the unpredictability of electrical Arcs, the Arc Protective Blanket (APB) may not totally contain the arc and flashes, but only reduce or limit explosive and incendiary effects. Properly installed APB's can reduce the risk of injury from the blast and heat. They do not provide any personal protection for hearing, eyes, smoke inhalation, hazardous gas inhalation, or burns.

WARNING
Arc Protective Blankets are not designed for electrical insulating protection. Using the Arc Protective Blanket for electrical insulating protection can result in serious injury or death.

MEETS NEW ASTM F2676 STANDARD

ASTM Standard for Testing of Arc Blankets

Arc protective blankets are used in many electrical applications to protect workers who are stationed near energized electrical parts. While these blankets have been used for years, there have been no testing criteria for their evaluation. A new ASTM International standard will be used to determine the effectiveness of arc protective blankets in suppressing the combined effect of an arc flash and an arc blast. The new standard, ASTM F2676, Test Method for Determining the Protective Performance of an Arc Protective Blanket for Electric Arc Hazards, was developed by Subcommittee F18.65 on Wearing Apparel, part of ASTM International Committee F18 on Electrical Protective Equipment for Workers.

This new standard gives companies the ability to evaluate blankets with a repeatable standard that can be done at many test labs using an electric arc and a high speed camera.

Cat. No.	Dimensions in. (mm)	Description	Weight ea. lbs. (kgs)
ARC45-15	48 x 60 (1219 x 1524)	15kA rating - navy blue	10 (4.5)
ARC45-40	48 x 60 (1219 x 1524)	40kA rating -gray/khaki	10 (4.5)
ARC48-15	48 x 96 (1219 x 2438)	15kA rating - navy blue	15 (6.8)
ARC48-40	48 x 96 (1219 x 2438)	40kA rating -gray/khaki	15 (6.8)
	-Add suffix "P" to include storage bag.	-Add suffix "PS" to include storage bag and tie-straps.	
	-Add suffix "C" to include P4 canister.	-Add suffix "CS" to include P4 canister and tie-straps.	
ARC142	1 x 42 (25.4 x 1067)	Single Kevlar Strap w/ Buckle	
ARC142-K16		Arc48 Strap Kit With 16 Buckles	4 (1.8)
ARC142-K12		Arc45 Strap Kit With 12 Buckles	3 (1.4)
P4	7 x 37 (178 x 940)	Canister holds 1-4 blankets w/ max. size 36" (914mm)	3.5 (1.6)

INSULATING PLASTIC GUARDS & COVERS

INSULATING PLASTIC GUARDS & COVERS TESTING

ASTM F 712-06 TABLE 3 Typical Electrodes for Testing Plastic Guard Equipment

Types of Guards	Energized Inner Electrode for All Tests [A]	Outer Ground Electrode[A]	
		Proof Test Withstand Voltage	Flashover Leakage Tests
Line guards and line guard connectors	Round metal tube or bar.	Complete electrode[B] shall be spaced back from openings through which the energized electrode protrudes during the test only as necessary to avoid flashover. Therefore, the entire area of each cover shall be tested as nearly as practical.	4 x 6" flexible conductive pad placed alternately on all exterior surfaces and across conductor opening of guard and assembled guard system joints spaced back from openings through which the energized electrode protrudes during the test only as necessary to avoid flashover at outer ends.
Insulator covers and deadend covers	Maximum conductor, hardware and insulator assembly for which rated or similar mock-up including mandrel[C] of conducive material approximate. [D]		
Pole guards, ridge pin and switch blade covers	[E] Round metal tube, fabricated mandrel[C] or cluster small metal tubes. [D]		
Arm guards Cutout covers	Round or rectangular metal tube or fabricated madrel[DC] Largest cutout with bare leads covered with equal rated line hose. Or similar mock-up including mandrel[C] of conductive material. [D]		
Structural barrier	Rectangular metal sheets approximately 3mm (0.06") thick, having smoothly rounded edges and corners, have been found to be satisfactory for this purpose. Also satisfactory are wet felt or sponge-top electrodes.		

[A] Moistened electrodes may be secured with rubber straps or blanket pins. Pressure-sensitive tape is helpful in securing dry metal foil electrodes.
[B] Suitable materials include: metal foil or screen; tap water-moistened sponge sheeting, or blanket made of wool, or similar material including synthetics.
[C] Thin metal sheet or screen wire secured on wood frames make suitable electrodes. Carved synthetic sponge moistened with tap water is suitable for small forms.
[D] The dimensions of the mandrel are to approximate the maximum size of equipment to which the guard system is to be applied.
[E] Metal canisters made for storing rubber blankets make suitable electrodes for pole guard tests.

Reprinted, with permission, from ASTM International, 100 Barr Harbor Drive, West Conshohocken, PA 19428. A copy of the complete standard may be obtained from ASTM, www.astm.org

guards and Covers are intended for brush contact applications. All guards can be coupled together to cover any length required.

Guards and covers are available in three different grades: Grade 1 with hot stick handles attached for application and removal and Grade 2 with eye fittings for standard shotgun sticks and Grade 3 without eye fittings. Guards are designed to nest within each other for storage.

The guards and covers are made from two different orange thermoplastics: Type I is an ABS standard cold weather high impact plastic and Type III is an ABS/PVC weather resistant material that offers advantages in tensile and impact strength, hardness, UV stability, and flame resistance.

ALWAYS FOLLOW YOUR COMPANY SAFETY PROCEDURES.

Rubber insulating equipment is realistically limited to Class 4 material in the design specification standards. Plastic guard equipment has been designed to go beyond these voltages and provide a satisfactory degree of worker protection. Major differences exist in use criteria between the rubber and the plastic guard equipment. Each glove, sleeve, or other article of rubber insulating equipment has a given safety factor for the phase to phase voltage on which it may be used and the class or proof voltage at which it is tested. Plastic guard equipment, however, is designed to provide a satisfactory safety factor only when used in a phase-to-ground exposure. If exposure is phase-to-phase, then a satisfactory safety factor is only provided if the exposure is covered-phase-to-covered-phase.

ASTM F712-06

TABLE 2 Minimum Flashover Test[A]

	Rating, kV	Max Use 60 Hz	Min Flashover Voltage Test ϕ-Ground kV		Criteria
	0-0[A]	0-Ground	60 Hz	DC	
2	14.6	8.4	14.0	20	No flashover other than momentary as a result of too-close spacing of electrode
3	26.4	15.3	25.0	35	
4	36.6	21.1	34.0	48	
5	48.3	27.0	43.0	61	
6	72.5	41.8	67.0	95	

[A] Cover-up materials are tested at values greater than the maximum use phase to ground values. The maximum use phase to phase values relate to guarded phase to guarded phase. The units are not rated for bare phase to guarded phase potentials.

Reprinted, with permission, from ASTM International, 100 Barr Harbor Drive, West Conshohocken, PA 19428. A copy of the complete standard may be obtained from ASTM, www.astm.org

AIR GAP® POLE GUARDS

Pole guards are installed before setting new poles to guard against accidental line contact. They also guard against pole contacts by personnel working in insulating aerial buckets or on platforms. Pole Guards are made from orange, Type I ABS, cold weather, high impact thermoplastic. Salisbury Pole Guards feature the unique Air Gap® design. Uniformly spaced dimples minimize the amount of surface area contacting the pole. This provides added insulation to keep electrical leakage to a minimum. When two pole guards are used to cover longer lengths, the Air Gap dimples nest together "locking" the two together with ample overlap. **This is an exclusive feature to Salisbury Pole guards.** The Air Gap design also allows for air flow between it and the pole minimizing moisture condensation and contamination buildup.

All Salisbury Pole Guards include drilled handles for easy application. Pole Guards should be used for brush contact. The opening should face away from possible line contacts, whenever possible. Pole Guards should be stored indoors to avoid prolonged exposure to UV rays and can be cleaned with a warm detergent solution.

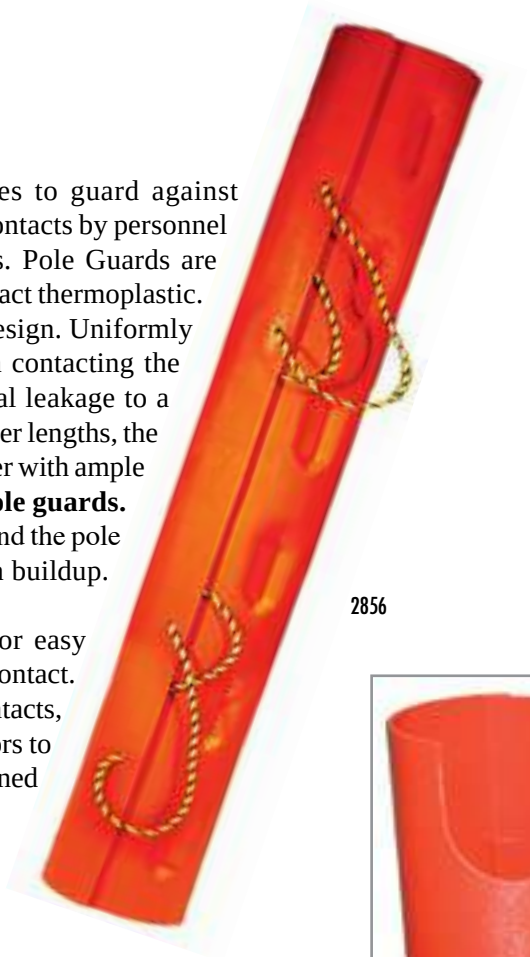

2856

The 21936 Pole Guard includes cut-out to allow clearance for a line post insulator base which is mounted to a utility pole.

Cat. No.	Length ft. (m)	Dia. in. (mm)	Class	Weight ea. lbs. (kgs)
2851	1' (.3)			3.3 (1.5)
2852	2' (.61)			6.3 (2.9)
2853	3' (.92)	6" (152.4)	4	9.0 (4.1)
2854	4' (1.2)			11.0 (5.0)
2856	6' (1.8)			17.0 (7.7)
1385	1' (.3)			3.6 (1.6)
1386	2' (.61)			7.0 (3.2)
1356	3' (.92)	9" (228.6)	4	10.0 (4.5)
1357	4' (1.2)			12.0 (5.4)
2496	6' (1.8)			19.0 (8.6)
2461	1' (.3)			5.0 (2.3)
2462	2' (.61)	12" (304.8)	4	8.0 (3.6)
2464	4' (1.2)			15.0 (6.8)
2466	6' (1.8)			22.0 (10.0)
21837	4' (1.2)	9" (228.6)	4 - FR Pole Guard	12.0 (5.4)
21936	2' (.61)	7" (177.8)	4	2.8 (1.27)

All guards are tested to ASTM F712

VERSA® AND LINK® GUARDS

Versa Guards® and
Link Guard® Cross Section

versa guards® and link guards® make use of air as well as the dielectric strength of plastic to provide total insulating value. Both guards have a 7" diameter and a hook shaped inner lip to keep the guard in place.

versa guards, with a voltage rating of 36.6 kV*, are designed so that two guards can be coupled together to cover most 13 kV single and double arm, pin and post constructions. A lighter 47" version (**2389**) of the standard 4.5' Versa Guard is available in a Type III ABS/PVC weather resistant material.

link guards, with a voltage rating of 72.5kV*, have inner and outer shells that run full length to include male and female couple ends. Two guards connected provide four overlapping thicknesses of plastic plus air at a joint.

Tee Connectors are used on horizontal and vertical posts and suspension insulator strings when plastic line guards are used on the conductor. Made from Type I, ABS plastic with eye fittings, the connector accommodates the male end of a guard. Available in two ratings: 72.5 kV* and 48.3 kV*. Accepts 34.5 kV pin insulators along with post and insulator strings.

*guarded Ø to guarded Ø.

Cat. No.	Description		Type	ASTM Voltage Class	Grade	Weight ea. lbs. (kgs)
VERSA GUARDS®- 4.5' (1.37 m)						
1686	ABS	Eye	I	4	2	8.8 (4.0)
1687	ABS	4' Stick	I	4	1	10.8 (4.9)
1688	ABS	6' Stick	I	4	1	11.8 ((5.4)
2373	ABS/PVC	Eye	III	4	2	8.8 (4.0)
2377	ABS/PVC	4 'Stick	III	4	1	10.8 (4.9)
2378	ABS/PVC	6' Stick	III	4	1	11.8 (5.4)
VERSA GUARDS®- 3.92' (1.19 m)						
2389	ABS/PVC	4' Stick	III	4	1	6.1 (2.8)
2689	ABS/PVC	Eye	III	4	2	8.1 (3.7)
LINK GUARDS- 4.5' (1.37 m)						
1680	ABS	Eye	I	6	2	10.5 (4.8)
1681	ABS	4' Stick	I	6	1	12.5 (5.7)
1682	ABS	6' Stick	I	6	1	13.5 (6.1)
2475	ABS/PVC	Eye	III	6	2	10.5 (4.8)
2476	ABS/PVC	4' Stick	III	6	1	12.5 (5.7)
2477	ABS/PVC	6' Stick	III	6	1	13.5 (6.1
TEE CONNECTORS						
2224	69 kV		I	6	2	7.8 (3.5)
2884	46 kV		I	5	2	6.0 (2.7 0

Bags are available on page C-10.

All guards are tested to ASTM F712

LIGHTWEIGHT CONDUCTOR COVERS

21315

21172

21173

lightweight Conductor Covers are ideal to cover long spans when weight is a consideration. They can be applied when wearing rubber gloves or with a fiberglass stick. Available with an eye for application with shotgun sticks. These covers have a voltage rating of 26.4 kV*. The inside diameter is 2". This product can connect with Salisbury 1.5" I.D. Class 3 or 4 flexible cover-up equipment.

The **21826 lightweight Conductor Cover** is a six (6', 1.8m) foot, cover rated Class 4 (36.6 kV*). It is applied using rubber gloves when following appropriate company work rules. The inside diameter is 3" making it useful on a wide range of conductor sizes.

The unique "connector-stop" molded into one end prevents covers from overlapping during installation. This eliminates wasted time when trucks have to be moved to reconnect sections that did not couple correctly. This cover is also compatible with Salisbury 1.5" I.D. Class 3 or 4 flexible rubber line hose.

All of our lightweight covers are made from safety orange Type I high density cross link polyethylene.

21234 Adapter Eye

*guarded Ø to guarded Ø.

21826

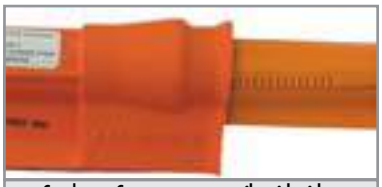

Conductor Covers connect easily with either plastic or rubber line hose

21826 Unique Connector Stop

Cat. No.	Description ft. (m)	ASTM Voltage Class	Grade	Weight ea. lbs. (kgs)
27 kV CONDUCTOR COVERS				
21172	5' (1.5) Cover w/ Eye	3	2	4.0 (1.8)
21173	5' (1.5) Cover w/o Eye	3	--	3.0 (1.4)
21315	5' (1.5) Cover w/ 4' (1.2) Fiberglass Stick	3	1	5.0 (2.25)
21234	Adapter Eye	3	--	1.5 (0.7)
35kV CONDUCTOR COVER				
21826	6' (1.8) Cover	4	--	6.5 (2.95)

All guards are tested to ASTM F712

Crossarm guards are available in two different styles: the 1370 pin type and the 1371 post type. They are used to prevent tie wires from contacting crossarms during hot line operations. Two different tie downs are provided: a neoprene and a polypropylene rope. Both are secured in the slots provided in the eye fitting. The post type model has an automatic gap closer which covers the insulator slot opening over the end of the arm.

The **Slide-On Crossarm guard** 736PH is applied by sliding the cover on to the arm from the end using the shotgun eye until the unit locks onto the insulator pins. The cover overlaps on top and has notches to ease application and removal.

Both of these guards are made from orange Type I ABS cold weather high impact plastic. These guards have a voltage rating of 36.6 kV*.

*guarded Ø to guarded Ø.

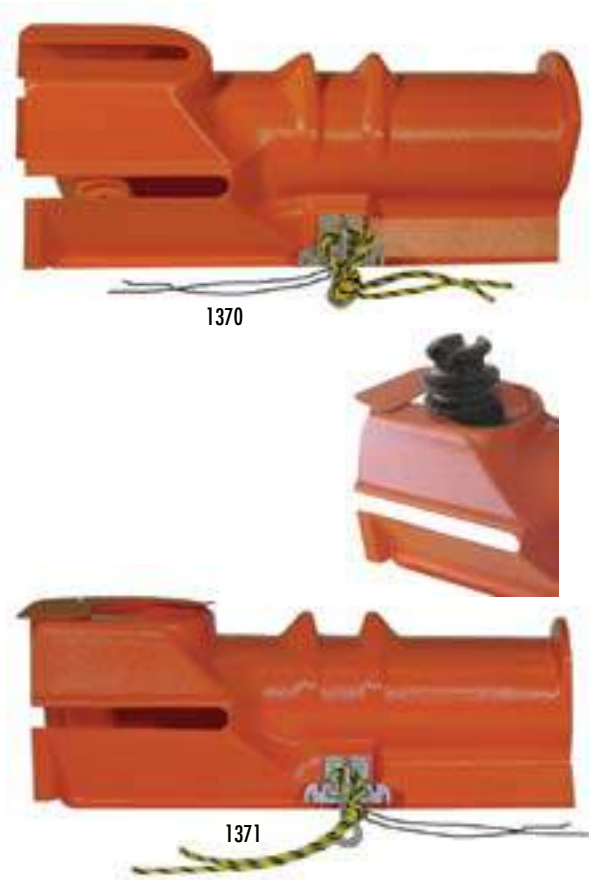

Cat. No.	Description	Dimensions in. (mm)	ASTM Voltage Class	Weight ea. lbs. (kgs)
1370	Crossarm or Pin Type Guard	9 x 9 x 25.5 (229 x 229 x 648)	4	5.7 (2.6)
1371	Crossarm or Post Type Guard	Fits Crossarm:5 x 6 (127 x 152)	4	6.0 (2.7)
736PH	Slide-On Crossarm Guard	7" I.D. x 36" (178 I.D. x 914)	4	4.5 (2)

All guards are tested to ASTM F712

SUBSTATION COVER-UP

BUS GUARDS

Substation Cover-up and barrier equipment is used during routine maintenance where accidental contact may occur. This barrier equipment is often used where outages are difficult to reach and the occurrence of accidental contact is high. These covers may be applied with rubber gloves or hot sticks. These covers are made from Type I orange ABS plastic. This equipment is not intended for permanent or semipermanent barrier or insulating applications. Use these covers to protect against accidental contact only. These covers are not to be left installed for extended periods of time especially when in contact with both a grounded and energized object.

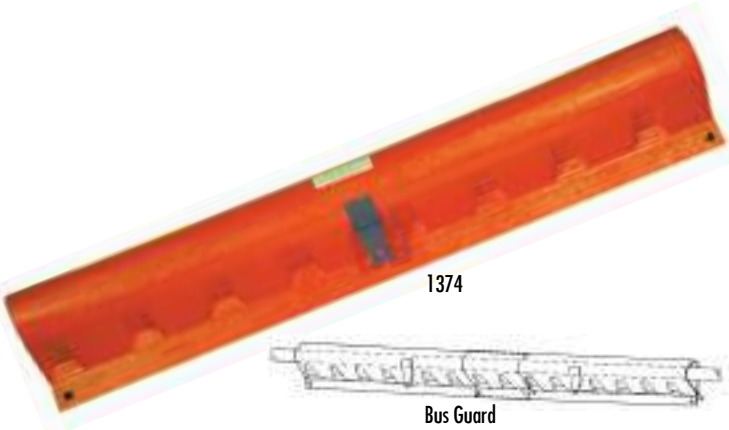

bus guards are easily interlocked with each other. To interlock units determine the length of bus to be covered. Place one unit on the bus then the other, pulling it over the first cover until the dimples interlock at the required length. This guard has a voltage rating of 36.6 kV*.

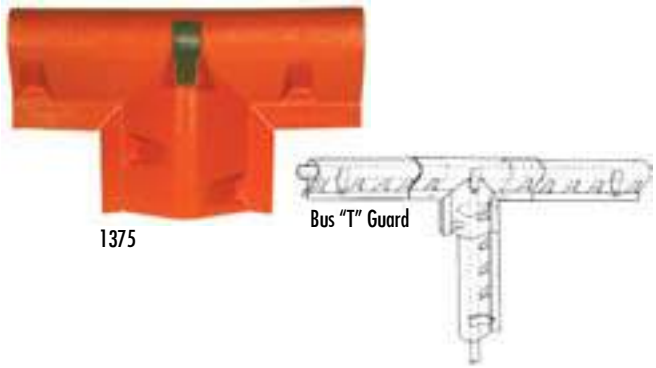

bus "T" guards interlock two or three bus guards at bus tap "T" connections and 90 degree angles. To interlock units, first position the bus guard then slide the "T" guard over the top interlocking the dimples. This guard has a voltage rating of 36.6 kV*.

bus End guards cover the ends of a substation bus supported by station post insulators. The slot and insulator grip hole can be easily enlarged in the field with a sharp knife. This cover also has a guide bead for a trim fit. This guard has a voltage rating of 26.4 kV*.

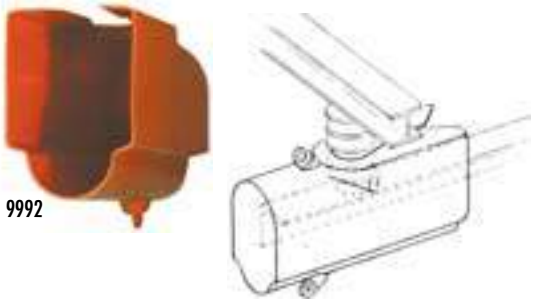

Eye kit is available on page C-10.

*guarded Ø to guarded Ø.

Cat. No.	Dimension in. (mm)	Description	ASTM Voltage Class	Weight ea. lbs. (kgs)
Bus Guard				
1374	5.25"x 9.5"x4.5' (133 x241x1.4m)	Impact Resistant	4	6.0 (2.7)
Bus "T" Guard				
1375	5"x15"x25" (127x381 x635)	ABS Plastic	4	4.0 (1.8)
Bus End Guard				
9992	8.5"x12"x24" (216x305x610)	UV Resistant High Density Cross Linked Polyethylene	3	5.0 (2.3)

All guards are tested to ASTM F712

All Bus Guards may be applied with rubber gloves or hot sticks. Contact your local Salisbury representative for Hot Stick purchasing or check out salisburybyhoneywell.com for more information on our line of hot stick products. Use Salisbury Insualting Rubber Blankets as additional or alternative cover-up in situations where Bus Guards may be used.

SUBSTATION COVER-UP

SWITCH JAW GUARD & BARRIER

Switch Jaw guards insulate the energized upper switch jaw and insulator when work is being done on the switch blade, lower insulator or other de-energized equipment ahead of the open switch. These guards easily slide over the upper insulator on open substation switches and lock over the bus. Jaw Guards are made from Type I UV resistant plastic. This guard has a voltage rating of 26.4 kV*.

2418

24455

Barrier and Switch Jaw Guard installed on a Substation Switch.

The **24219 Switch Jaw Cover** provides an insulated barrier to the energized upper switch jaw and insulator, when work is being done on the switch blade, lower insulator, or other de-energized equipment ahead of the open switch. This guard slides easily over the upper insulator on open substation neutral disconnect cabinet switches and locks over the bus. The 24219 Cover is made from Type I cold weather high impact plastic. This guard has a voltage rating of 14.6 kV*.

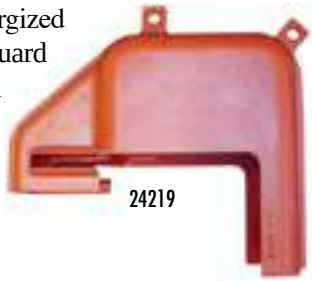

24219

T1

The **T1, Terminal Sleeve disconnect Switch** is used on open style disconnects and made from Type II SALCOR®, EPDM rubber.

Switch barriers slide between the last two skirts on the post or pin cap insulators of the substation disconnect switch. This locks the barrier in place. When switches are mounted back to back and work is needed on one, the barrier can be placed on the energized switch to form a visible, electrical and mechanical barrier. Work can then be done on the opposite switch or other de-energized equipment. This guard has a voltage rating of 36.6 kV*.

1376

*guarded Ø to guarded Ø.

NOTE: If your substation needs are not fulfilled by the products on this page, please contact your local Salisbury representative for custom applications.

Cat. No.	Dimensions in. (mm)	Description	ASTM Voltage Class	Weight ea. lbs. (kgs)
JAW GUARD				
2418	8" D. x 18" (203 D. x 457)	Use w/ switch 8"(203) Dia. Insulated	3	4 (1.8)
2424	8" D. x 24" (203 D. x 610)		3	5 (2.3)
24455	8" D. x 16" (203 D. x 406)		2	2.25 (1.14)
2413	13" D. x 24" (330 D. x 610)	Use w/ switch 13"(330) Dia. Pin Cap Insulators	3	7 (3.2)
JAW COVER & TERMINAL SLEEVE				
24219		Jaw Cover	2	4 (1.8)
T1	10" x 2" I.D. (254 x 51 I.D.)	Terminal Sleeve		.33 (.15)
BARRIER				
1376	.125"x43"x52" (3.2x1092x1320) 5" (127) slot to center	Orange Type I High Impact ABS Plastic	4	12 (5.5)

bags for line guards and Pole guards come in two different sizes and can hold two nested line guards.

The 1871 **Pole guard bag** is designed to hold two nested pole guards.

All of these bags are made from soil resistant vinyl coated nylon and equipped with a drawstring and mail bag lock.

The **applicator Eye Kit** is used to apply a new or extra shotgun eye where needed. If a Bus or "T" guard needs to be shortened or inverted, this kit allows modifications to be made. Clear PVC pipe cement may be used to secure the eye. Directions are included.

The **Insulating barrier Sheet** can be used to create barriers in the field. This sheet is made from Type I ABS plastic and can be worked with ordinary hand tools, saws, tin snips and drills. It can also be hot formed using a heat gun. For example, this sheet can be bent at right angles over a table top to produce flanges for joining with other parts. Pipe adhesive can be used to join to other parts. The rated puncture is 50kV. This sheet is not intended for permanent or semipermanent barrier or insulating applications. It should be used for accidental brush applications. The 2842 barrier material meets the requirements of ASTM F712, 9.1.1 Type 1 Guards. The final application and classification of the barrier/cover is the responsibility of the user.

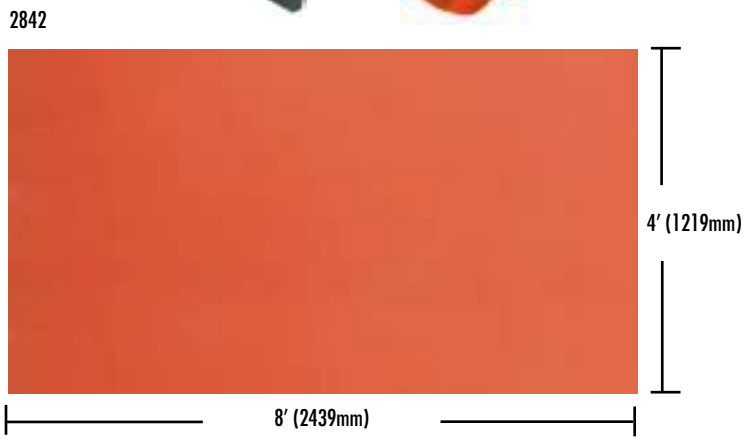

Cat. No.	Dimensions ft. (m) in. (mm)	Weight ea. lbs. (kgs)
BAGS - LINE GUARDS		
1841	2 - 6' (1.8) line guards or 2 - 9" x 6' (229 x 1.8) Line Guards	4.5 (2.0)
1933	2 - 4.5' (1.4) line guards or 2 - 9" x 4' (229 x 1.22) Line Guards	3.5 (1.6)
BAGS - POLE GUARDS		
1871	2 - 12" x 6' (305 x 1.8) Pole Guards	5.2 (2.4)
EYE KIT		
1378	1 eye per kit	.25 (.11)
BARRIER SHEET		
2842	4' x 8' x .125" (1.2m x 2.4m x 3.2)	36 (16.4)

The **universal Hot Cover** is used to provide additional cover-up and clearances. This cover is made from orange Type I polyethylene plastic. The hot stick eye allows this cover to be placed and removed with a shotgun type clamp stick or with rubber gloves. To secure in place use the elastic tie-down cord. This cover can be used on overhead or underground energized cable terminators, potheads or while inverted, on lightning arrestors. This cover has a voltage rating of 26.4 kV*.

816

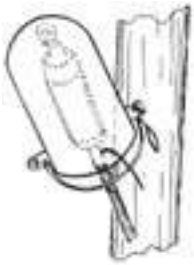

The **Pole bracket and Insulator base Cover** guards against accidental contact with pole, bracket and insulator base during routine maintenance. It is made from an orange UV resistant Type I polyethylene plastic. The Grade 2 hot stick eye allows this cover to be applied and removed with a hot stick or with rubber gloves. It covers metal or fiberglass brackets 8-12" long and pole mounting plates. This cover also interlocks with a pole insulator. This cover has a voltage rating of 26.4 kV*.

4333

Pole Bracket and Insulator Base Cover

The **underground distribution Elbow Cover** covers primary elbows and spade terminals during routine maintenance. It covers up to the face plate and cable connection. This cover is made from orange Type I polyethylene plastic. The hot stick eye allows this cover to be applied and removed with a hot stick. This cover self locks for a secure fit in confined areas. The bead can be trimmed in the field to meet clearance requirements. This cover has a voltage rating of 26.4 kV*.

Elbow

4314

Elbow Cover Application

*guarded Ø to guarded Ø.

Cat. No.	Description	ASTM Voltage Class	Weight ea. lbs. (kgs)
816	Hot Cover 8" x 16" (203 x 406)	3	2.5 (1.1)
4314	Underground Distribution Elbow Cover 15" x 14.25" (381 x 362)	3	2.0 (.9)
4333	Pole Bracket & Insulator Base Cover 20" x 25" (508 x 635)	3	2.5 (1.1)

All guards are tested to ASTM F712

OUTAGE PROTECTION

OUTAGE PROTECTION

FAQ

Q: Why should I use outage protection?

A: The cost of animal caused outages to the utilities is preventable. Animals cause power outages daily, creating time lost to utilities. Salisbury offers an easy solution to this expensive problem.

Animals cannot be stopped, but these products can prevent them from causing costly outages. It's only a matter of time before an animal caused outage happens. Salisbury's Outage Protection Product Line includes the essential items you need to protect yourself from costly outages.

All of these products are completely made from material that is resistant to the effects of UV and ozone. Designed to withstand the test of time, sun and weather, to keep you protected longer.

Designed for linemen. These lightweight products are easy to use and install.

NOTE

Outage protection is not to be used as Personal Protective Equipment (PPE).

SILICONE BUSHING COVERS

Standard Salisbury bushing Covers and **Salisbury Tri-Port® bushing Covers** are made from Ozone and UV resistant *silicone* rubber, maximizing the outdoor durability and tracking resistance. **These covers have been accepted by Rural utilities Service (RuS).**

Bushing Covers protect against wildlife contacts between energized equipment and ground by insulating exposed energized bushing parts.

Standard and **Tri-Port bushing Covers** interlock with the top weathershed of the bushing and are securely fastened by inserting lock buttons (provided). The **21116TC, Standard bushing Cover**, includes the **21644 Tube Closure**. The 21644 Tube Closure provides an easier and quicker way to securely close the standard bushing cover.

Bushing Covers can be installed without disconnecting equipment using rubber insulating gloves. Covering a small area of the lead wire, the opening can be trimmed to accommodate larger wires or 5/8" and 3/4" Salisbury Stinger Covers.

Cone bushing Covers

For complete 360 degree coverage, the BC512 is the right choice. Complete with upper and lower trim rings for a custom fit size and internal ribs for added air flow and water drainage. Made from Ozone and UV resistant *silicone* rubber, the BC512 permanently protects bushings from all sources of potential outages. Installation requires de-energizing equipment.

21116 - Standard

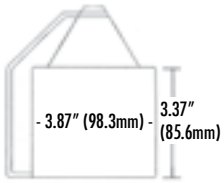

Standard Bushing Guard

21116 TC- Standard

21644

21317 - Tri-Port®

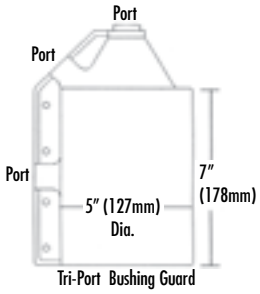

Tri-Port Bushing Guard

BC512

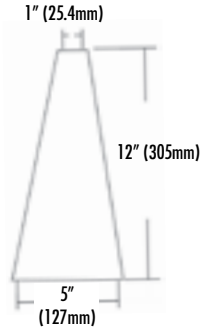

Cat. No.	Description	Dimensions in. (mm)	Quantity	Flashover Test Voltage	Weight ea. lbs. (kgs)
BUSHING COVERS					
21116	Cover Only	-	24 pcs.	16 kV	16 (7.3)
21116TC	Cover Only w/ 21644	-	24 pcs.	16 kV	16 (7.3)
21644	Tube Closure	-	-	-	-
21183	Cover Kit w/Stinger Cover*	.375 x 18 (9.5 x 457)	24 pcs.	n/a	20 (9)
BC512	Cone Bushing Cover	12H x 5 W (305 H x 127 W)	1	n/a	1.5 (.7)
TRI-PORT® BUSHING COVERS					
21317	Cover Only		24 pcs.	16 kV	28 (12.7)
24140	Cover Kit w/ Stinger Cover*	3/8 x 18 (9.5 x 457)	24 pcs.	n/a	35 (16)

*** See page D-5 for more Stinger Covers**

COMPLETE BUSHING-STINGER COVER

Complete bushing-Stinger Cover
This product is made from UV resistant PVC plastic to maximize the outdoor durability. The Complete Bushing/ Stinger Cover interlocks with the top weathershed of the bushing and securely fastens by inserting lock buttons (provided). The Complete Bushing/Stinger Cover can be installed without disconnecting equipment using rubber insulating gloves. This product offers an integrated stinger cover which will cover the lead wire for an easy solution.

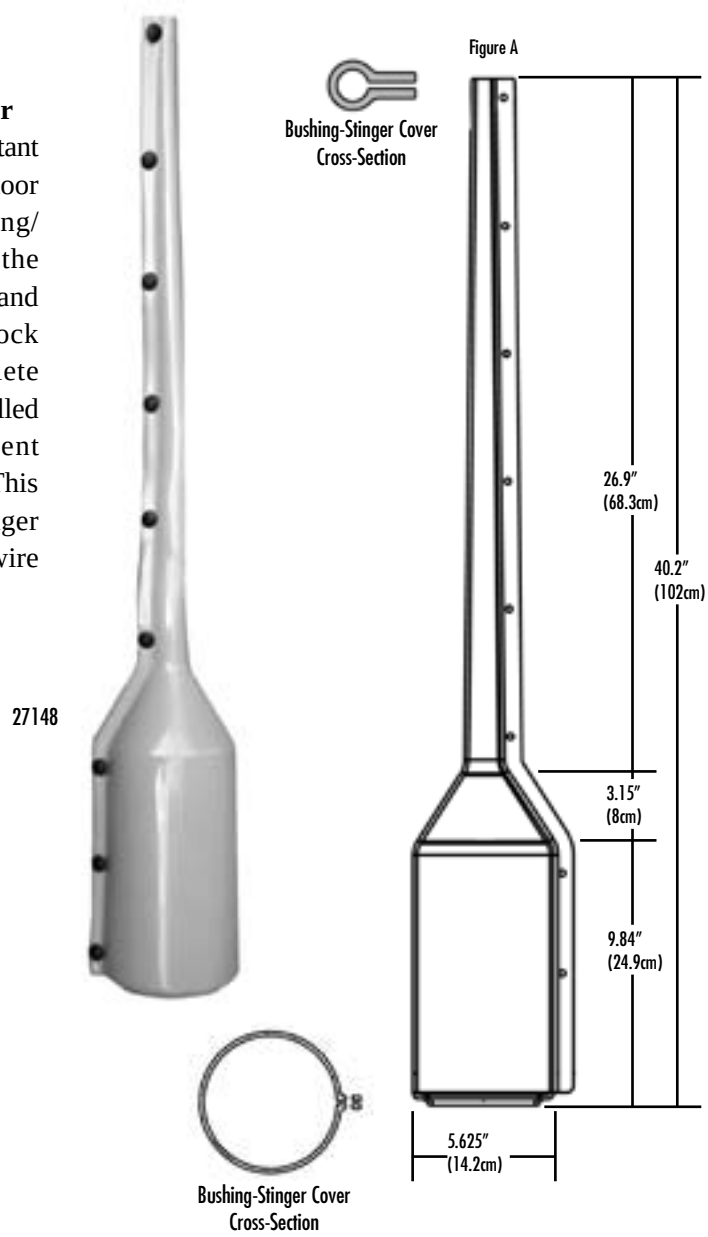

Cat. No.	Description	Dimensions in. (cm)	Quantity	Weight ea. lbs. (kgs)
COMPLETE BUSHING-STINGER COVER				
27148	Bushing Cover & Stinger Cover Unit	see figure A	20 pcs.	48 (21.9)

Stinger Covers protect against phase to phase and phase to ground wildlife contacts. **These covers have been accepted by Rural utilities Service (RuS).**

The stinger cover can be installed without disconnecting the lead wire from the bushing. Available in three diameters, it is easily cut in the field to the needed length.

Stinger covers are track resistant and made from Ozone and UV resistant SALCOR® elastomer in a grey color. The covers are proven to provide years of reliable service either independently or when used with bushing covers.

Stinger Cover Cross-Section

38-50SC

Cat. No.	I.D. in. (mm)	Dimensions ft. (m)	Quantity	Flashover Test Voltage kV	Weight lbs. (kgs)
EPDM					
38-2SC	3/8 (9.5)	2 (.61)	25 pcs.	10.5	9.5 (4.3)
38-50SC	3/8 (9.5)	50 (15.3)	1 coil	10.5	9.5 (4.3)
38-12SC	3/8 (9.5)	12 (3.7)	4 pcs.	10.5	9.5 (4.3)
38-18SC	3/8 (9.5)	18" (457mm)	50 pcs.	10.5	11 (5)
38-100SC	3/8 (9.5)	100 (30.5)	1 coil	10.5	16 (7.25)
58-12SC	5/8 (15.9)	12 (3.7) coil	4 pcs.	12.5	22 (10)
58-50SC	5/8 (15.9)	50 (15.3) coil	1 pc.	12.5	21 (9.5)
58-100SC	5/8 (15.9)	100 (30.5) coil	1 pc.	12.5	45(20.5)
34-12SC	3/4 (25.4)	12 (3.7) coil	4 pcs.	14.9	22 (10)
34-25SC	3/4 (25.4)	25 (7.6) coil	2 pc.	14.9	22 (10)

For sizes and lengths other than those listed above, contact your local Salisbury representative.

INSTANT INSULATION

Instant Insulation may be installed as permanent cover to protect against outages caused by weather, trees and animals. Instant Insulation resists ozone and ultraviolet deterioration while remaining flexible even at sub-zero conditions.

Instant Insulation is made of orange or grey SALCOR® elastomer. Instant Insulation is sold in three diameters, each 12 feet in length. Each include six nylon UV resistant bar-lock cable ties to secure it to the conductor.

Instant Insulation can be installed using the **2494 applicator**. To install, insert one end of the Instant Insulation into the applicator prongs, then roll and coil the insulation as shown. Secure the coil end with tape, cable ties, or rubber bands. To install, release the secured end and the Instant Insulation will unroll and enclose the conductor.

1127

2494

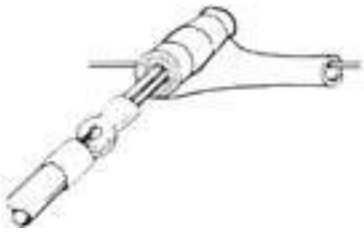

Cat No.	Dimensions in.	Dimensions mm	Color	Weight ea. lbs.	Weight ea. kgs
INSTANT INSULATION 12' / 3.6m long					
1127	.75 I.D.	19 I.D.	Grey	7	3.2
1128	.75 I.D.	19 I.D.	Orange	7	3.2
1129	1.00 I.D.	25 I.D.	Grey	8	3.6
1130	1.00 I.D.	25 I.D.	Orange	8	3.6
1131	1.25 I.D.	32 I.D.	Grey	10	4.5
1132	1.25 I.D.	32 I.D.	Orange	10	4.5
2494		Universal Hot Stick Applicator		1	.5

GREENJACKET®
"It Fits"

Salisbury by Honeywell is proud to offer Greenjacket® Outage Protection products and services. Here is more information about this great new service. For additional information please visit GreenjacketSalisbury.com.

1. It is the only industry comprehensive product line designed for energized installation

2. It is custom designed to precisely fit each piece of equipment – "It Fits"

3. It is offered as part of a service where site plans are made to identify what exactly is needed for coverage

WHaT WE OFFER

Greenjacket provides world-class patented products, tools, and processes for preventing animal-caused power outages at electrical substations. Our customized, turnkey outage protection solutions make it easy for managers to select the best option for improving power reliability. Greenjacket custom-manufactures its dielectric covers to ensure that each cover has the right fit for the electrical component being protected. We provide a product that is quick and easy to install—even in an energized environment.

HOW WE dO IT

1. We evaluate schematics and/or images of existing facilities to develop a budgetary estimate for a solution.
2. On agreement, we conduct a site assessment to determine points of risk in the substation, then use 3D photogrammetry to obtain equipment dimensions off energized equipment.
3. We create a Site Protection Plan that includes a prioritized, itemized list of the protective covers required to mitigate bird- and animal-caused outages. The plan includes detailed installation instructions.
4. The product is manufactured using existing and/or custom-developed moulds, as required to protect the substation that has been evaluated.
5. Product is delivered to the customer's site for installation. Greenjacket provides optional consulting support for both customer and contractor based installations.
6. Follow-up risk mitigation programs are available to optimize ongoing risk management.

THE valuE WE dElIvER

- **Improved Power Reliability:** by reducing the number of bird- and animal-caused contacts, the number of power interruptions is reduced.
- **dollar Savings:** bird and animal-caused outages can result in the costly replacement of equipment, expensive overtime repair charges, and fire-drill management of work schedules.
- **Increased Revenues:** outages can dramatically reduce billable electric services to customers or negatively impact revenues through production downtime.
- **Improved Community and Public Relations:** outages create stress for everyone, from the customer through to power system managers and executive teams.
- **Reduced Penalties:** wildlife protection agencies are increasing the scope and dollar amount of fines related to animal "takes"; fines currently range as high as $500,000 per incident.
- **Comprehensive, Turnkey Solutions:** no more piecemeal coverage with ill-fitting products. Greenjacket provides a customized solution that is tailored to fit the specific components of a substation.

GLOVES & SLEEVES

GLOVES & SLEEVES

Rubber and SALCOR® Protective Equipment

Rubber insulating gloves are available in six ASTM defined voltage classes. Rubber insulating sleeves are available in Class 00 through 4. The chart below identifies the class, proof test voltage and maximum allowable exposure voltage.

For an 8.5 x 11 reprint of this chart, contact your local Salisbury representative.

Protective Rubber Equipment Labeling Chart

for Salisbury Linemen's Natural Rubber and SALCOR® Rubber Protective Equipment

Class Color	Proof Test Voltage AC / DC	Max. Use Voltage* AC / DC	Rubber Molded Products Label	Glove Label	Rubber Dipped Sleeve Label
00 Beige	2,500 / 10,000	500 / 750		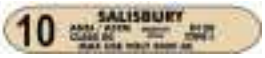	
0 Red	5,000 / 20,000	1,000 / 1,500			
1 White	10,000 / 40,000	7,500 / 11,250		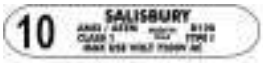	
2 Yellow	20,000 / 50,000	17,000 / 25,500			
3 Green	30,000 / 60,000	26,500 / 39,750			
4 Orange	40,000 / 70,000	36,000 / 54,000			

Insulating Gloves and Sleeves must have a color coded label to meet appropriate ASTM Specifications.

* Max. Use Voltage when worn with leather protectors.

Manufactured for outstanding protection, comfort and long-life

Rubber insulating gloves are among the most important articles of personal protection for electrical workers. Incorporating high dielectric and physical strength, flexibility and durability, Salisbury rubber insulating gloves have earned the reputation for superior performance–meeting and exceeding the requirements of current ASTM D120 specifications and IEC EN60903 Standards.

Salisbury rubber insulating gloves are manufactured by dipping porcelain forms into a tank of liquefied rubber. The thin layer of rubber which results is allowed to dry and the process is repeated until the required thickness is reached. Depending on the voltage class of the glove, this dipping-drying-dipping cycle may need to be repeated over 30 times. After the desired thickness is achieved, the gloves are allowed to dry. Once dry, they are cut to length, the reinforcing bead is rolled, and the ASTM label and manufacturing information is applied along with any additional permanent marking that may be requested.

The gloves are cured in an autoclave under steam pressure and heat. After curing, the gloves are visually inspected. Gloves with visual imperfections are rejected. The gloves are then given a halogenation treatment (chlorination) to increase the comfort and wearability. The gloves are electrically tested following ASTM D120/IEC 903 specifications. Following the electrical test, the gloves are given a final visual inspection. The gloves are then ready to be boxed and shipped.

ARE YOU NOT SURE WHAT GLOVES YOU NEED?

Salisbury has made it easy with the Salisbury Glove Configurator™

Glove Configurator

Visit www.salisburybyhoneywell.com to use Salisbury's exclusive Glove Configurator™. This interactive web tool allows you to easily determine which Salisbury gloves you need to meet your requirements.

MAKING A PROPER INSPECTION

OSHA 1910.137 states "Insulating equipment shall be inspected before each day's use and immediately following any incident that can reasonably be suspected of having caused damage. Insulating gloves shall be given an air test, along with the inspection." Salisbury's New **g100** (Patent Pending), with **g100a adapter for Class 00 and 0** and smaller size gloves, and the **g99,** without additional adapter, are the perfect answer for inflating your gloves for inspection.

The **g99** is a simple, easy to use, portable glove inflator. The G99 provides a quality means of inspecting gloves in the field. The glove is secured to the inflator using a nylon strap and fastened with a hook and pile closure. Inflation is accomplished by pumping the bellows of the inflator against any surface. **nOTE: gloves should be expanded no more than 1.5 times their normal size for Type I, and 1.25 times normal for Type II SalCOR.**

SALISBURY ADVANTAGE

The **g100** is also a simple and easy to use, portable glove inflator. The G100 operates exactly like the G99, but includes an additional **g100a** adapter to also inspect Class 00 and 0 and smaller gloves. To use the adapter, the glove is secured to the G100A adapter using a nylon strap with a hook and pile closure. The adapter, with glove attached, is then placed on top of the inflator to be inflated for inspection.

G100A

G100 with inflated lo-volt glove ready for inspection.

INF Series Glove Inflators & Sleeve Expanders

Proper safety requires frequent inspection of gloves and sleeves. These glove inflators and sleeve expanders provide an efficient way to conduct complete and thorough visual inspections before and after use in the field. Easy to install. Simple to operate. Accommodates all sleeve and glove sizes. Minimum floor space. Compressed air source required.

Cat. No.	Description
G99	Glove Inflator Kit
G99B	Replacement Bag
G99S	Replacement Strap
G99V	Replacement Check Valve
G100	Glove Inflator Kit w/ Adapter
G100A	Lo-Volt Glove Adapter
INF-1	Standard Bench Model Inflator with Hand Pump
INF-2	Standard Bench Model Inflator with Air-Line Connection
INF-3	Standard Floor Model
INF-4	Bench Model Air-Bag Inflator for High Voltage Gloves
INF-5	Bench Model Air-Bag Inflator for High and Low Voltage Gloves
INF-6	Standard Sleeve Expander
INF-7	Replacement Glove Inflator Boots for Air Bag Glove Inflators
INF-8	Replacement Bladders for Sleeve Expander (with closed ends) - Set of three
INF-9	Single Replacement Bladders for Sleeve Expander (with closed ends) - Outside Bladder only
INF-10	Hand Held Glove Inflator

INF-1

INF-6

SALISBURY LINEMEN'S GLOVES

LOW VOLTAGE - ASTM CLASS 00, 0

Measure the circumference around the palm.

Selecting the right size, length and style

Salisbury linemen's gloves are available in a full range of sizes, from 7 through 12, including half sizes on 8, 9, and 10. Proper fit is important. To determine glove size, measure the circumference around the palm. Allow for additional room if fabric glove liners are to be worn, especially with thermal liners.

SALISBURY ADVANTAGE

Type I and Type II gloves are extremely flexible to make working with small parts easy. The gloves meet or exceed ASTM D120 and IEC EN60903 Standards.

E011Y Gloves being manufactured.

Class 00 and 0 gloves are available in 11 and 14 inch lengths. **Class 00 Electrical Insulating Rubber gloves** are made from red or black Type I natural rubber, blue Type II SALCOR®, or in contrasting blue/orange Type II SALCOR. The contrast between the outer orange color against the inner blue color makes inspecting for cuts and tears easier when the glove is inflated or stretched.

Class 0 Electrical Insulating Rubber gloves are available in red, black, yellow, and contrasting black/yellow colors in Type I Natural Rubber. The contrast between the outer yellow color against the inner black color makes inspecting for cuts and tears easier when the glove is inflated or stretched. These gloves are also available in blue or contrasting blue/orange colors Type II SALCOR rubber.

E0011BL/9

E0014BLO/9

E011Y/10

E011R/9

Cat. No. Breakdown for Class 00 Gloves

	Class	Length	Color	Size
E	00	11	R, B, BL, or BLO	7, 8, 8H
				9, 9H
E	00	14	R, B, BL, or BLO	10, 10H
				11, 12

R=red B=black Type I Natural Rubber
BL=blue BLO=blue in, orange out :Type II SALCOR
Example: E0011BL/8 **NOTE:** Size 11H no longer available.

Cat. No. Breakdown for Class 0 Gloves

	Class	Length	Color	Size
E	0	11	Y, B, R, BL, BLO, or BY	7, 8, 8H
				9,9H
E	0	14	Y, B, R, BL, BLO, or BY	10, 10H
				11, 12

R=red B=black Y=yellow:Type I Natural Rubber
BY=black in, yellow out:Type I Natural Rubber
BL=blue BLO=blue in, orange out :Type II SALCOR
Example: E014R/9 **NOTE:** Size 11H no longer available.

SALISBURY LINEMEN'S GLOVES

HIGH VOLTAGE - ASTM CLASS 1, 2, 3, 4

Class 1 through 4 gloves are available in the industry standard color black, or in contrasting two-color combinations. The contrast between the thin outer color against the inner color makes inspecting for cuts and tears easier when the glove is inflated or stretched.

Class 1 through 4 gloves are available in 14, 16 and 18 inch lengths. A **straight cuff** is standard on 14" (356 mm), 16" (406 mm) & 18" (457 mm) gloves. The straight cuff is the default style.

A **contour cuff** is angled to prevent bunching or binding at the elbow when the arm is bent. Available on all 18" (457mm) gloves only.

The **bell cuff** accommodates heavier winter clothing and allows for greater air flow in warmer weather. These are available for Class 1 through 4 gloves. Bell cuff gloves are not available in sizes 7, 8 or 8H.

Straight Cuff
E316YB/10

Contour Cuff
E218CYB/10

Bell Cuff
E214BCRB/10

Cat. No. Breakdown for Class 1,2,3,4 Gloves

	Class	Glove Length in.	Cuff Style	Color	Size
E	1	14, 16 or 18	BC***, C	B, YB or RB	7, 8, 8H
E	2	14, 16 or 18	BC***, C	B, YB or RB	9,9H
E	3*	14, 16 or 18	BC***, C	B, YB or RB	10, 10H
E	4**	14, 16 or 18	BC***, C	B, YB or RB	11, 12

BC***=bell cuff C=contour cuff (Contour cuff available for 18" only.)

***available in sizes 8 through 12 including half sizes only**

****available in sizes 9 through 12 including half sizes only**

*****bell cuff gloves available in sizes 9 through 12 including half sizes**

B=black YB=Y inside, B out RB=R inside, B out:Type I Natural Rubber

Example: E116BCYB/10

NOTE: Size 11H no longer available.

SALISBURY LINEMEN'S MITTENS

HIGH VOLTAGE - ASTM CLASS 1, 2, 3, 4

Salisbury lineman's mittens are made from the same durable, lightweight rubber as the five finger gloves yet keep the user warmer during harsh temperatures. The three finger mitten allows for precise hand movement as well.

Class 1 through 4 mittens are available in the industry standard black or in contrasting two-color combinations. The contrast between the thin outer color against the inner color makes inspecting for cuts and tears easier when the glove is inflated or stretched.

Class 1 through Class 2 mittens are available in 14, 16 and 18 inch lengths. Class 3 through Class 4 mittens are available in 16 and 18 inch lengths. A **bell cuff** design is standard on all mittens. BC=Bell Cuff.

Mittens are available in sizes 9, through 11 full sizes only.

EM216BCRB/10

Cat. No. Breakdown for Class 1,2,3,4 Gloves

	Class	Glove Length in.	Cuff Style	Color	Size
EM	1	14, 16 or 18	BC	B, YB or RB	9
EM	2	14, 16 or 18	BC	B, YB or RB	10
EM	3	16 or 18	BC	B, YB or RB	11
EM	4	16 or 18	BC	B, YB or RB	

Bell Cuff colors B=black YB=Yellow inside, Black out RB=Red inside, Black out

leather Protector gloves should always be worn over Rubber Insulating Gloves to provide the needed mechanical protection against cuts, abrasions and punctures. All Salisbury protectors are steamed pressed on curved hand forms to insure proper fit over Rubber Gloves. Manufactured from top grade leather, all are sewn with heavy duty nylon thread in the "gunn cut" inseam construction pattern. Each protector for Class 1-4 gloves are equipped with a nonmetallic buckle on the pull strap and an extra wide leather reinforcement over the thumb seam. Protectors for Class 00 and 0 gloves are available with non-metallic buckle and pull strap or elastic wrist.

all Salisbury leather Protectors meet aSTm F696 standards.

It is the responsibility of the purchaser to specify the overall length of the protector gloves. The Clearance Table shows the minimum distance which shall be allowed between the protector glove cuff and the bead of the rubber glove per ASTM F496 Specifications.

WaRnIng: do not use leather protectors alone for protection against electric shock. Serious injury or death will result. always use a properly rated insulating glove for the voltage being worked.

Proper care of leather protectors is essential to user safety. Inspect the leather protectors when inspecting rubber gloves. Metal particles, imbedded wire, abrasive materials or any substance that could physically damage the rubber gloves must be removed from the protector before use.

The minimum distance from the leather protector cuff to the bead of the rubber glove for this Class 2 glove is 2 inches.

CLEARANCE TABLE FOR LEATHER PROTECTORS PER ASTM F496 - Table 4

Glove Class	Min. Distance Between Protectors and Rubber Gloves in.	mm
00, 0	1/2	13
1	1	25
2	2	51
3	3	76
4	4	102

Adapted, with permission, from F496-08 Standard Specification for In-Service Care of Insulating Gloves and Sleeves, copyright ASTM International, 100 Barr Harbor Drive, West Conshohocken, PA 19428. A copy of the complete standard may be obtained from ASTM, www.astm.org.

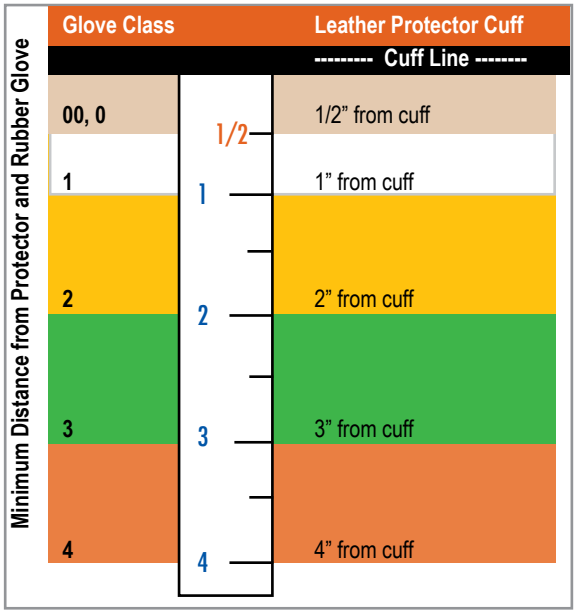

SALISBURY ADVANTAGE

156 Premium Series

Salisbury's SALCOR® cuff provides maximum protection.

These protectors are made from specially tanned Grade A Red Boulevard buffed leather and an orange colored SALCOR "Super Cuff" in the 4" (102 mm) and 6" (152 mm) cuff lengths. The "Super Cuff" has better characteristics than leather or vinyl cuffs; it does not absorb water, has greater track resistance, and creepage.

Cat. No.	Cuff Length in. (mm)	OAL Length in. (mm)	Weight ea. lbs. (kgs)
156-4	4 (102) Straight Cuff	12 (305)	1 (.5)
156-6	6 (152) Straight Cuff	14 (356)	1.2 (.5)

Available in dual sizes: 8/8.5, 9/9.5, 10/10.5, 11/11.5, 12

156-4

156-6

IlP Series

Manufactured from top grain cowhide, or goatskin, these protectors provide excellent protection for rubber insulating gloves at a very economical price. Cowhide cuffs are tough leather on palm side and orange vinyl on the back, while the goatskin cuffs are green leather on palm side and orange vinyl on back. Full complement of styles from low-volt through 16" contour cuff. Comes in size 7, dual sizes 8/8.5 through 11/11.5 and size 12.

IlPm Series mitten Protector

Manufactured from top grain cowhide, these protectors offer excellent comfort and protection. The ILPM Series mitten protectors feature adjustable straps with non-metallic buckles and are stitched with polyester thread for strong seams. Cuffs are tough leather on palm side and orange vinyl on the back of the hand. Comes in sizes 9, 10 and 11.

IP Series

Manufactured from top grain cowhide or goatskin, these protectors offer excellent comfort and protection. The LP Series protectors feature adjustable straps with non-metallic buckles and are stitched with polyester thread for strong seams. Cuffs are tough leather on palm side and orange vinyl on the back of the hand. Comes in sizes 7 to 12, including half sizes 8 1/2 to 11 1/2.

Cat. No.	OAL Length in. (mm)	Weight ea. lbs. (kgs)
ILP SERIES - COWHIDE		
ILP3S*	12 (305)	1 (.5)
ILP4S*	13 (330)	1 (.5)
ILP5S*	14 (356)	1.2 (.5)
ILP6S* / **	15 (381)	1.2 (.5)
ILP7C* / **	16 (406)	1.5 (.7)
ILP10*	10 (254)	.7 (.32)
ILP10A* w/ pull strap	10 (254)	.7 (.32)
*To specify goatskin, use ILPG. Goatskin not available in size 7. Available in dual sizes: 7, 8/8.5, 9/9.5, 10/10.5, 11/11.5, 12 ** Not available in size 7.		
ILPM SERIES - COWHIDE		
ILPM3S	12 (305)	1 (.5)
ILPM4S	13 (330)	1 (.5)
ILPM5S	14 (356)	1.2 (.5)
Available in sizes: 9, 10, 11		
LP SERIES		
LP3S	12 (305)	1 (.5)
LP4S	13 (330)	1 (.5)
LP5S	14 (356)	1.2 (.5)
LP6S	15 (381)	1.2 (.5)
LP7C	16 (406)	1.5 (.7)
LP10	10 (254)	.7 (.32)
LP10A w/ pull strap	10 (254)	.7 (.32)
To specify goatskin, use LPG. Available in single sizes: 8, 8.5, 9, 9.5, 10, 10.5, 11, 11.5, 12		

ILPG10

ILPG10A

ILPM5S

ILP7C

LPG3S

LP7C

LPG5S

GLOVE STORAGE & GLOVES KITS

Proper storage extends the service life of linemen's gloves and sleeves.
Folds and creases strain rubber and cause it to crack from ozone prematurely. By storing rubber gloves in the right size bag, and never forcing more than one pair into each bag, equipment will lie flat and last longer.

Salisbury bags are constructed of heavy duty canvas duck and are double stitched and riveted at stress points for extra durability. Canvas bags feature a D ring for hanging in trucks or on work belts. Bags feature tapered gussets with wide opening tops for easy insertion.

glove and Protector Combo bags contain two layered pockets in one bag. Now, both a pair of gloves and protectors can be properly stored in one convenient bag. Never worry about having to bring more than one bag from job site job site.

GB116 GB116GC

Cat. No.	For Glove length in. (mm)	Dimensions inches (mm)	Weight ea. lbs. (kgs)
26 oz. CANVAS GLOVE BAGS			
GB112	11 (280)	9" x 14" (229 x 356)	1 (.5)
GB114	14 (356)	9" x 16" (229 x 406)	1 (.5)
GB116	16 (406)	9" x 18" (229 x 457)	1.2 (.6)
GB118	18 (457)	9" x 20" (229 x 508)	1.5 (.7)
26 oz. CANVAS GLOVE BAGS w/ goggle case			
GB114GC	14 (356)	9" x 16" (229 x 406)	1 (.5)
GB116GC	16 (406)	9" x 18" (229 x 457)	1.2 (.6)
GB118GC	18 (457)	9" x 20" (229 x 508)	1.5 (.7)
14.75 oz. CANVAS GLOVE & PROTECTOR BAGS			
GPB112	12 (305)	9" x 14" (229 x 356)	1 (.5)
GPB114	14 (356)	9" x 16" (229 x 406)	1 (.5)
GPB116	16 (406)	9" x 18" (229 x 457)	1.2 (.6)
GPB118	18 (457)	9" x 20" (229 x 508)	1.5 (.7)
GLOVE & PROTECTOR COMBO BAGS			
2C16	14 (356) 16 (406)	9" x 18" (229 x 457)	1.2 (.6)
2C18	18 (457)	9" x 20" (229 x 508)	1.5 (.7)

SALISBURY ADVANTAGE

glove Kits

Salisbury's insulating rubber gloves are necessary for every electrical worker's complete safety. And to insure your safety, Salisbury's leather protectors provide needed protection from cuts, abrasions, and punctures. To keep these safety items in top condition, proper storage is very important.

GK011BL/9

Product Numbering Chart for Glove Kits

	Class	Length (inches)	Color	Size of Gloves (choose one below)
GK	00	11 or 14	B, R, BL	7, 8, 9, 10, 11, 12
GK	0	11 or 14	R, BL, B, Y	7, 8, 9, 10, 11, 12
GK	2	14, 16, or 18	B, RB	7, 8, 9, 10, 11, 12

Example: GK011BL/9

Type I Natural Rubber available in: R=Red, Y=Yellow, B=Black, RB=Red in, Black out

Type II SALCOR® Rubber available in: BL=Blue

Note: If you require test date stamping, please specify when ordering.

Rubber Insulating Sleeves extend coverage of the arm from the cuff of rubber insulating gloves to the shoulder– fully protecting these areas from accidental contact with energized conductors and equipment. Salisbury sleeves feature a reinforcing fold at the cuff. This fold is preferred over a rolled bead because it adds less bulk to the cuff and fits into the glove easier without pushing. Two different processes are used to manufacture insulating sleeves; dipping and molding. Both meet the current requirements of ASTM D1051 and offer the same high level of quality and protection.

Sizing

Sleeves should be selected to fit the arm comfortably, covering from the top of the shoulder to inside the top of the glove. Regular size sleeves are the shortest and have the smallest arm and wrist openings. To minimize the possibility of the sleeves pushing gloves off the hand, size the sleeve to the shortest length possible while maintaining complete coverage to the shoulder.

Sizing Linemen's Sleeves

STRAIGHT ARM SLEEVE- Figure 1	A in. (mm)	B in. (mm)	C in. (mm)	D in. (mm)
Small	24.25 (616)	15.13 (384)	12.5 (317)	5.75 (146)
Regular	26.25 (667)	15.5 (394)	11.25 (286)	5.5 (140)
Large	28.5 (724)	17 (432)	12.87 (327)	6.87 (175)
Extra Large	30 (762)	19 (483)	13.25 (337)	6.87 (175)

EXTRA CURVED ARM SLEEVE- Figure 2	A in. (mm)	B in. (mm)	C in. (mm)	D in. (mm)
Small	24.25 (616)	15.13 (384)	12.5 (317)	5.75 (146)
Regular	26.5 (673)	15.5 (394)	12.25 (311)	5.25 (140)
Large	27.75 (705)	16 (406)	12.87 (327)	6.87 (175)
Extra Large	29.5 (749)	17.5 (445)	12.87 (327)	7 (178)

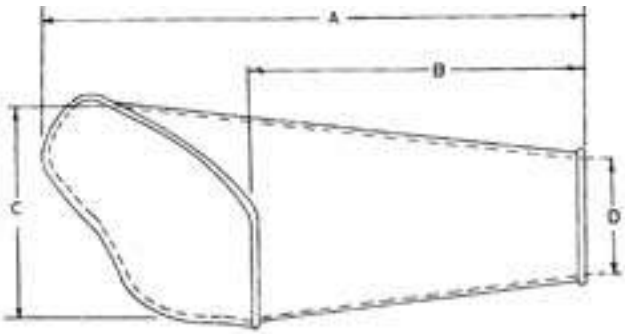

Figure 1

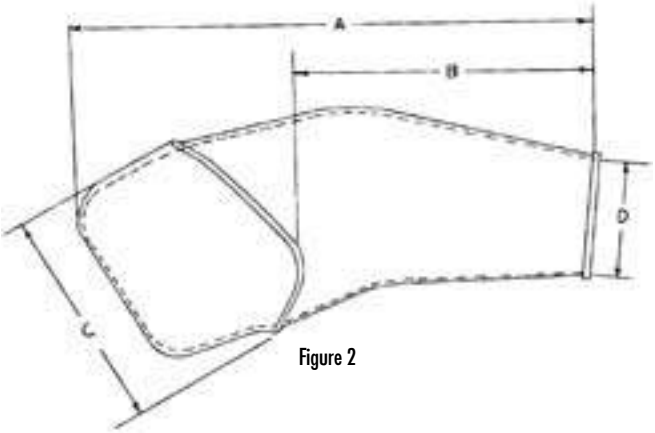

Figure 2

LINEMEN'S SLEEVES

DIPPED

SALISBURY ADVANTAGE

dipped sleeves are manufactured in the same way as Salisbury rubber insulating gloves. Porcelain forms are dipped into liquefied rubber, dried, trimmed, marked and cured. Every sleeve receives the same quality inspections and electrical testing before shipping. Dipped sleeves are available in the same colors as dipped gloves, including two color combinations.

Salisbury is the only manufacturer that offers two popular styles of dipped lineman's sleeves: straight and extra-curved. Both styles are available in every color or color combination, size, and voltage class. Most importantly, all are made to the same rigid levels of quality demanded by Salisbury.

Only Salisbury offers both dipped and molded sleeves.

Extra-Curved Arm
D2LYR-EC

Straight Arm
D2RYB-ST

Cat. No. Breakdown for Dipped Type I Sleeves

Voltage Class	Size	Color
D0	S, R, L or XL	Y=yellow
D1	S, R, L or XL	B=black
D2	S, R, L or XL	YB=Y inside, B out
D3	S, R, L or XL	RB=R inside, B out
D4	S, R, L or XL	YR=Y inside, R out

S=small, R=regular, L=large
XL=extra large
Example: D2LYB-ST

Add suffix "-ST" to order straight cuff or "-EC" to order extra-curved cuff

MOLDED

molded sleeves are manufactured by either injection or compression molding methods. The advantage these methods offer is the ability to produce sleeves of Type I or SALCOR® Type II synthetic rubber. SALCOR sleeves provide the same high quality and electrical protection as natural rubber, with the added benefit of being resistant to ozone and ultraviolet radiation. Type I sleeves are available in black, yellow or maroon. Type II SALCOR sleeves are black or orange. Molded sleeves are available in curved arm style only.

Black
Type I
2RB

Yellow
Type I
3LY

Orange
Type II
2ROS

Cat. No. Breakdown for Molded Type I Sleeves

Voltage Class	Size	Color
1	R or L	Y
2	R, L or XL	B, Y, M
3	R or L	Y, M
4	R or L	M
R=regular L=large XL=extra large		B=black Y=yellow
Example: 2LB		M=maroon

Cat. No. Breakdown for Molded Type II Sleeves

Voltage Class	Size	Color
1	R or L	BS or OS
2	R, L or XL	BS or OS
R=regular L=large XL=extra large		BS=black SALCOR
Example: 2LOS		OS=orange SALCOR

Proper storage extends the service life of linemen's sleeves. Folds and creases strain rubber and cause it to crack from ozone prematurely. By storing rubber sleeves in the right size bag, and never forcing more than one pair into each bag, equipment will lie flat and extend the life of the product.

Salisbury bags are constructed of heavy duty canvas duck and are double stitched and riveted at stress points for extra durability. Canvas bags feature a D ring for hanging in trucks or on work belts. Bags feature tapered gussets with wide opening tops for easy insertion.

SALISBURY ADVANTAGE

The **T32** bag contains a **crush resistant** lining to create a more protective environment for your sleeves.

Sleeve buttons, straps, and harnesses are required to wear rubber insulating sleeves properly. Four buttons are required per pair of sleeves. Two straps are required per pair of sleeves. One harness is required per pair of sleeves.

B22

Two-piece sleeve button

4 required per pair of sleeves

B2

One piece sleeve button

4 required per pair of sleeves

Cat. No.	For Sleeve length in. (mm)	Dimensions inches (mm)	Weight ea. lbs. (kgs)
CANVAS SLEEVE BAG			
T31	–	30" x 9.5" (762 x 241mm)	1.5 (. 7)
T32	–	30" x 13" (762 x 330 mm)	3 (1.4)
BUTTONS			
B2	–	One Piece Sleeve Button	.2 (.01)
B22	–	4 Screw Type Buttons	.8 (.04)
STRAPS			
S1	15"(381mm) Strap w/ 4 B2 Buttons		.1 (.005)
HARNESS			
H1	Harness w/ 4 B2 Buttons		1 (.45)

S1

H1

liner gloves enhance the comfort of wearing Rubber Insulating Gloves in every season. Liners provide warmth in the cold season and absorb perspiration in the warm months. Many styles and fabrics are available with either an open or knit wrist.

The knit wrist style grips the wrist rather than allowing the cuff to roll down and bunch at the palm. All Liner Gloves are for year round use with Rubber Insulating Gloves and Mittens. All liners are made from stretch fabric that can fit any hand size.

The **l Series** has a tough outer cotton fabric while the inner lining is soft and comfortable. The **lmKC Series** is light, airy and allows ease of movement. The **lmKW Series** is made from a wool blend fabric that moves easily yet gives a substantial layer of lining.

The **89 Series** is Salisbury's classic summer and winter glove liner. Liners absorb perspiration from hands. The summer liner is white in color and 100% cotton. The winter blend is a rust color and 100% acrylic.

L10JK L10J

L12J L12MKC

L10MKW 89/1402 89/4702

Cat. No.	Description	Wrist Style	Length in. (mm)	Weight ea. lbs. (kgs)
L10JK	Jersey Style, Light Weight, Seams Out	Knit	10 (254)	.14 (.06)
L10J	Jersey Style, Light Weight, Seams Out	Open	10 (254)	.12 (.06)
L12J	Jersey Style, Light Weight, Seams Out	Open	12 (305)	.14 (.07)
L10MKC	Machine Knit, 100% Cotton	Knit	10 (254)	.12 (.05)
L12MKC	Machine Knit, 100% Cotton	Knit	12 (305)	.12 (.05)
L10MKW	Machine Knit, Wool Blend	Knit	10 (254)	.14 (.06)
L12MKW	Machine Knit, Wool Blend	Knit	12 (305)	.14 (.07)
89/1402	White Machine Knit, 100% Cotton	Knit	10 (254)	.12 (.06)
89/4702	Rust Machine Knit, 100% Acrylic	Knit	10 (254)	.12 (.06)

One size fits all.

Salisbury's **SalPOl gloves** protect hands during cold weather jobs. The black split cowhide leather has a 3M Thinsulate* lining to keep hands warm. For extra warmth a long knit wrist is sewn into the safety cuff to keep out snow and ice. The glove also has a full leather index finger, knuckle strap, leather fingertips, and pull patch.
*Thinsulate is a registered Trademark of the 3M Company.

SP-L

drivers Work gloves set the standard for quality at an affordable price. Combining comfort, durability and economy, Salisbury leather Drivers Work Gloves meet the tough challenges of today's demanding workplace. Available in lined or unlined styles. The bindings are color coded to indicate size: red-small, green-medium, brown-large, purple-extra large.

I95/217/WHS

linemen Work gloves are designed specifically for use by linemen and offers many of the quality features found in our leather protectors. Made from high quality grain cowhide or goatskin, this glove is soft and flexible, while still being highly abrasion and cut resistant for long wear.

LW2SPE

SALPOL GLOVES			
Cat. No.	Description	Length in. (mm)	Weight ea. lbs. (kgs)
SALPOL GLOVES			
SP-S	Small Size Polar Glove	n / a	.5 (.23)
SP-L	Large Size Polar Glove	n / a	.5 (.23)

DRIVERS & LINEMEN WORK GLOVES		
Cat. No.	Description	Weight ea. lbs. (kgs)
I95/217/WHS*	Unlined	.3 (.14)
I95/317/WHS*	Lined	.3 (.14)
*Add "-S" for small, "-M" for medium, "-L" for large, "-XL" for extra-large.		
LW2SPE**	Cowhide leather, natural pigskin cuff	.4 (.18)
LWG2SPE**	Goatskin leather, natural pigskin cuff	.4 (.18)
**Add "-M" for medium, "-L" for large, "-XL" for extra-large.		

1461 1460 10-4 1451

S99 S5 SS30

Rub-OuT® is a non-petroleum-based hand cleaner for workers who wear rubber gloves and sleeves. Dissolves and removes grease, oil, ink, tar, pipe dope, creosote, paint and more without harming natural rubber or SALCOR® rubber. Cleans with or without water. Contains natural skin conditioners and leaves a fresh citrus scent.

Salisbury's **Rub-OuT® Towelettes** are premoistened heavy duty hand cleaner towels that work fast to loosen, dissolve, and absorb dirt and grease, and will not harm rubber gloves! Our powerful yet safe cleaning agents work together with an absorbent, nonscratching abrasive cleaning towel. The citrus-based formula easily removes soil from your hands and leaves them cleaned and conditioned anywhere you're working. *And after cleaning your hands there is enough absorbency to clean your tools and other surfaces with the same towel.* These shop size (10.5" x 12.25") durable towels quickly remove tough-to-clean substances including lubricants, tar, oils, wax, caulk and much more.

TEn-FOuR® glOvE duST is a cooling, frictionless powder that absorbs moisture and perspiration when wearing rubber gloves. Provides extra comfort while preventing gloves from getting sticky. The 5-oz. bottle easily fits in a pocket or glove bag. The 4-quart bulk package is used in test labs as a dusting powder when cleaning and testing.

SuPER SalCO® Cleaner is a concentrated detergent with a special grease release formula that removes oils, grease and dirt from natural rubber and SALCOR rubber equipment. Suitable for washing linemen's rubber gloves, sleeves and other specialty equipment, by hand or in commercial washing machines. Also works well on fiberglass and other materials. Just dilute with water, apply with a rag or sponge and rinse thoroughly.

Cat. No.	Description	Weight ea. lbs. (kgs)
RUB-OUT® HAND CLEANER		
1451	16 oz. (.45kg) can, 12/pack	16 (7.3)
1452	4.5 lbs. (2kgs) cans, 6/pack	28 (12.7)
1453	Dispenser for 4.5lb. (2kg) can	1 (.5)
RUB-OUT® TOWELETTES		
1460	Bucket of 60, 6 buckets / Case	14 (6.4)
1461	Single Packets, 100 Singles / Case	3 (1.4)
TEN-FOUR® GLOVE DUST		
10-4	12 @ 5 oz. (170g) squeeze bottles	5.5(2.2)
10-4-4QT	4 quarts (3.8 ltrs.) bulk, single	8 (3.6)
SUPER SALCO® DETERGENT		
S4	1 gal (3.8 ltr.) jugs, 4 pack	54(24.5)
S5	5 gal (19 ltr.) drum	49 (22.3)
S55	55 gal (208 ltr.) drum	540 (245)
SALCON® SILICONE SPRAY		
S99	Aerosol can	16 oz. (.454)
SUNSCREEN 30		
SS30	100 towelettes	6 (2.72)

SalCOn® Silicone Spray is specially formulated to reduce friction on SALCOR or natural rubber products. Reduces surface creepage on rubber gloves and sleeves. Forms an oxygen barrier which helps reduce corona cutting and weather checking on rubber equipment. May also be used to spray spark plugs and battery terminals in damp weather to assist in starting.

SunSCREEn 30 is a non-oily sunscreen that does the job for at least four hours. Safe for leather and rubber gloves, leaves no residue—no slippery hands. Large convenient towelettes.

PROTECTIVE FOOTWEAR

PROTECTIVE FOOTWEAR

FAQ

Q: What is the difference between the yellow/black Salisbury ASTM F2413-05 EH Footwear and the red/black ASTM Dielectric Footwear?

A: The yellow/black Salisbury ASTM F2413-05 EH Footwear are manufactured per the requirements of ASTM F2413-05 EH. Which means the outsole of these overshoes and boots have been lot tested to 20,000 volts to the electrical hazard requirements of ASTM F2413-05. Salisbury's red/black ASTM dielectric footwear conforms with ASTM F1117 and are all 100% tested to the electrical hazard requirements of ASTM F1116 at 20,000 volts.

Q: What are the benefits of ASTM Dielectric Footwear?

A: ASTM Dielectric Footwear protects ground workers from step and touch potential in the whole work zone, not just one confined work area, like a grounding mat.

ASTM Dielectric Footwear can help reduce the amount of electrical workers in a work area since they are not confined.

ASTM Dielectric Footwear allows personnel to safely mount and dismount equipment in the work zone.

ASTM Dielectric Footwear allows personnel to safely retrieve material from truck bins.

ASTM DIELECTRIC FOOTWEAR

DEEP HEEL OVERSHOES - 100% TESTED TO 20KV

51508

51509

21405

21406

aSTm dielectric Footwear provides extra safety when climbing ladders and poles where the deep heel cavity can lock onto the rungs. These boots and overshoes are 100% waterproof and made from premium grade ozone resistant rubber. The construction is hand-layered in full-cut patterns to fit over work boots. The fabric lining makes them easy to get on and off. The sole has a durable construction with a non-skid bar tread outsole.

all of Salisbury's aSTm dielectric Footwear conforms with aSTm F1117 and all are 100% TESTEd to the electrical hazard requirements of aSTm F1116 at 20,000 volts.

ASTM Dielectric Footwear comes in four styles all with pole-climbing reinforcement patch. The **Overshoe** is available without buckles or with two buckles. The **Overboot** with adjustable side strap features a 14" height or a 17" height. The attached buckle and hardware is nonmetallic.

nEW Improved Overshoes-Salisbury now offers improved 51511 non-buckle overshoe and 51512 2-buckle overshoe. The improved overshoes include a bob sole with aggressive tread for better traction. The deep heel and improved arch are specially designed for climbing ladders comfortably. The wider opening allows for easier on/off.

51512

51511

BOB SOLE

Cat. No.	Description	Sizes in. (mm)	Weight pr. lbs. (kgs)
21405	17", 1 Buckle Overboot	Whole Sizes 7 - 16	5.8 (2.6)
21406	14" 1 Buckle Overboot	Whole Sizes 7 - 17	5.0 (2.3)
51508	Non-Buckle Overshoe	Whole Sizes 7 - 17	3.3 (1.5)
51509	2 Buckle Overshoe	Whole Sizes 7 - 17	4.4 (2)
51511	Bob Sole - Non-Buckle Overshoe	Whole Sizes 7 - 16	3.3 (1.5)
51512	Bob Sole - 2 Buckle Overshoe	Whole Sizes 7 - 16	4.4 (2)

NOTE: When ordering, add size as suffix to part number. Be sure to add a space between the part number and size. Example: 51511 7

ASTM F2413-05 EH FOOTWEAR

DEEP HEEL OVERSHOES, OUTSOLE TESTED TO 20KV

aSTm F2413-05 EH deep Heel Overshoes provide extra safety when climbing ladders and poles where the deep heel cavity can lock onto the rungs. These boots and overshoes are made from an ozone resistant yellow rubber that's 100% waterproof. The construction is hand-layered in full-cut patterns to fit over work boots. The fabric lining makes them easy get on and off. The sole is an anti-skid bar tread. **The outsole of these overshoes and boots have been lot tested to 20,000 volts to the electrical hazard requirements of aSTm F2413-05.**

ASTM F2413-05 EH Deep Heel Overshoes come in three styles all with pole-climbing reinforcement patch. The **Storm Rubber Overshoe** is available without buckles or with two buckles. The **Full-Cut Overshoe** with adjustable side strap features a 17" height.

51581

51530

Anti-Skid
Bar Tread

21402

Cat. No.	Sizes	Description in. (mm)	Weight pr. lbs. (kgs)
21402	Whole Sizes 7-17	17" (432) Overshoe	5.8 (2.6)
51530	Whole Sizes 6-17	2-Buckle	4.4 (2)
51581	Whole & Half Sizes 7-12, Whole Sizes 6, 13-17	Storm Rubber	3.3 (1.5)

NOTE: When ordering, add size as suffix to part number. Be sure to add a space between the part number and size. Example: 51511 7

ASTM F2413-05 EH FOOTWEAR

OVERSHOES, OUTSOLE TESTED TO 20KV

aSTm F2413-05 EH Overshoes are made from an ozone resistant yellow rubber. The construction is hand-layered in full-cut patterns to easily fit over work boots. These overshoes are 100% waterproof. The lining is fabric so they easily slip on and off. The sole is an anti-skid bar tread. **The outsole of these overshoes and boots have been lot tested to 20,000 volts to the electrical hazard requirements of aSTm F2413-05.**

ASTM F2413-05 EH Overshoes are available in two styles: a Storm Rubber Overshoe and an 11" 4-Buckle Arctic both with a pole-climbing reinforcement patch.

51824

Anti-Skid
Bar Tread

31924

SERVUS by Honeywell

Cat. No.	Sizes	Description in. (mm)	Weight pr. lbs. (kgs)
31924	Whole Sizes 6-17	11" (279) 4-Buckle Arctic	4.6 (2.1)
51824	Whole & Half Sizes 7-12 Whole Sizes 13-16	Storm Rubber	3.25 (1.5)

NOTE: When ordering, add size as suffix to part number. Be sure to add a space between the part number and size. Example: 51511 7

ASTM F2413-05 EH FOOTWEAR

OVERSHOES, OUTSOLE TESTED TO 14KV

aSTm F2413-05 EH Overshoes are made from yellow ozone resistant rubber that's 100% waterproof. The construction is hand-layered in full-cut patterns to easily slip over work shoes. The lining is fabric so they easily slip on and off. **The outsole of these overshoes and boots have been lot tested to 14,000 volts to the electrical hazard requirements of aSTm F2413-05.**

ASTM F2413-05 EH Overshoes come in two styles. The **deep Heel lineman's Storm Rubber** has a diamond V-grip outsole and pole-climbing reinforcement patch. The **11" 4-buckle** has an anti-skid bar tread sole and heel.

SERVUS by Honeywell

Diamond V-grip Outsole

51510

31910

Anti-Skid Bar Tread

Cat. No.	Sizes	Description in. (mm)	Weight pr. lbs. (kgs)
31910	Whole Sizes 7-17	11" (279) 4-Buckle	3.8 (1.7)
51510	Whole & Half Sizes 6-12, Whole Sizes 13-17	Deep Heel Storm Rubber	3.1 (1.4)

NOTE: When ordering, add size as suffix to part number. Be sure to add a space between the part number and size. Example: 51511 7

INSULATED JUMPERS

INSULATED JUMPERS

FAQ

Q: What are the benefits of the Sure-lok® Jumper clamp?

A: The Salisbury Sure-lok Jumper clamp is an improvement over other jumper clamps available. The Sure-lok features a ratchet-type locking mechanism (patent pending), which guarantees the clamp not to loosen once it is installed on a line.

Loose Jumper clamps not only jeopardize your safety but can also cause fires and power outages. Even when torqued using wrenches or pliers, traditional clamps will eventually loosen from line vibrations and thermal cycling. This clamp tightens with a ratchet action using one hand, with no extra tools for a secure, positive connection. It can't come loose until you want it to. Pull and turn the locking knob and it loosens like any traditional clamp.

SALISBURY ADVANTAGE

Insulated bypass jumper sets consist of three basic components: one pair of clamps, one pair of ferrules, and a length of insulated cable. Many of the most popular jumper sets are listed on the following pages associated with each of the different types of jumper clamps. When a custom jumper is required, follow this procedure to ensure that a complete and functional jumper is specified.

If you need assembled jumper sets, quickly, please contact your local Salisbury Representative for more information.

Let Salisbury professionally assemble your sets for you.

All Salisbury Insulating Jumpers meet ASTM F2321 standards.

Insulated Jumper Checklist

1. Specify the style of insulated clamps. All of the clamps are hand installed wearing rubber insulating gloves, accept either shrouded or unshrouded ferrules, and accept insulated cable up to 4/0, 35kV. Insulated jumper clamps are sold in pairs.

2. Specify the size and length of insulated cable. Salisbury offers 15kV cable from #2 to 4/0. 25 and 35 kV cable are both available in sizes 1/0 and 2/0. Be sure to specify the length of the cable chosen.

3. Specify the size and style of ferrules required. The size of the ferrule will be determined by the size of the cable. Specify the appropriate ferrule catalog number for either shrouded or unshrouded ferrules. Both types are sold in pairs.

4. Specify if the jumpers are to be factory assembled. A complete jumper set with crimped ferrules and installed jumper clamps will be supplied. Salisbury has state of the art computer controlled crimping available.

5. Specify if there are any special requirements. This could include heat shrink tubing, special assembly instructions, markings, packaging etc.

The Salisbury Sure-lok® Jumper Clamp

The Salisbury Sure-lok® Jumper clamp is a revolutionary improvement over any other jumper clamp in the world. Featuring a ratchet type locking mechanism (patent pending), this is the only clamp available guaranteed not to loosen once installed on a line.

Loose Jumper clamps not only jeopardize your safety but can also cause fires and power outages. Even when torqued using wrenches or pliers, traditional clamps will eventually loosen from line vibrations and thermal cycling. This clamp tightens with a ratchet action using one hand, with no extra tools for a secure, positive connection. It can't come loose until you want it to. Pull and turn the locking knob and it loosens like any traditional clamp.

Available in our exclusive SALCOR® material and the industry's most durable single piece clear plastic jumper clamps.

Custom built assemblies are available. Contact your local Salisbury Representative for more information.

1786

2261
SALCOR® Sure-lok®

	Cat. No.	Main Line Range	Max Amps Continuous	Rating	OAL Length in. (mm)	Weight ea. lbs. (kgs)
SALCOR®	**2261**	477 MCM (.9"-.162")	400	36 kV Ø-Ø	11.5 (292 mm)	10 (4.5)
SALCOR®	**2271**	954 MCM (1.25"-.162")	400	21 kV Ø-GRD	11.5 (292 mm)	11 (5)
Clear Plastic	**1786**	477 MCM (.9"-.162")	400	36 kV Ø-Ø	11.5 (292 mm)	8 (3.6)
Clear Plastic	**2116**	954 MCM (1.25"-.162")	400	21 kV Ø-GRD	11.5 (292 mm)	10 (4.5)

SALCOR® INSULATED JUMPER CLAMPS

SalCOR® Jumper Clamps are available in two main line sizes with a maximum use voltage of 35kV.

The **SalCOR Jumper Clamp** not only provides a superior grip, but also resists ozone cutting and tracking. Being molded of rubber, these handles are inherently impact resistant and extremely durable. The body and jaw are made from a copper base alloy. The lower ring contact is made of self lubricating bronze. Assemble jumpers with insulated jumper cable and 5/8”- 11 NC threaded ferrules. Assembled kits are sold with a 10 ft. (3m) cable and unshrouded ferrules.

Custom built assemblies are available. Contact your local Salisbury Representative for more information.

2260

2270

Cat. No.	Main Line Range	Max Amps Continuous	Rating	OAL Length in. (mm)	Weight ea. lbs. (kgs)
2260	477 MCM (.9”-.162”)	400	36 kV Ø-Ø	11.5 (292 mm)	10 (4.5)
2270	954 MCM (1.25”-.162”)	400	21 kV Ø-GRD	11.5 (292 mm)	11 (5)

Assembled 10 ft. / 3m Jumper Sets (Unshrouded Ferrules)

	Jumper Cat. No.	Cable Size	Cable Cat. No.	Ferrule Cat. No.	Max Amps Continuous	Weight ea. lbs. (kgs)
2260 Clamp	**2264**	#2-15 kV	2754	2022	200	10.9 (4.9)
	2265	1/0-15 kV	2755	2023	250	13.5 (6.1)
	2266	2/0-15 kV	2756	2024	300	14.8 (6.8)
2270 Clamp	**2274**	#2-15 kV	2754	2022	200	11.9 (5.4)
	2275	1/0-15 kV	2755	2023	250	14.6 (6.8)
	2276	2/0-15 kV	2756	2024	300	15.9 (7.2)

CLEAR PLASTIC & FRP INSULATED JUMPER CLAMPS

Salisbury's superior stress cracking resistant Clear Jumper Clamps are available in two main line sizes with a maximum use voltage of 35kV. Assemble these clamps with insulated jumper cable and 5/8" - 11 NC threaded ferrules.

Clear Plastic Jumper Clamps are compact, lightweight, and virtually unbreakable. The transparency allows easy inspection of the ferrule and cable inside of the handle. The body and jaw are made from a copper base alloy. The lower floating ring contact is bronze. These handles should be cleaned only with a mild detergent to maintain the transparency of the handle. Assembled kits are sold with a 10 ft. (3m) cable and unshrouded ferrules.

FRP Jumper Clamps are designed for maximum loads, voltages, and cables. During a temperature rise test at 25% overload, these clamps heated 35% less than 4/0 cu. cable. Blunted points on the handle provide optimum grip, resist impact, and will not soften with overloads. The body and jaw are made from a copper based alloy. The lower jaw is made of self lubricating bronze. The assembled jumpers are sold with a 10ft. (3m) or 12 ft. (3.7m) cable and unshrouded ferrules.

Custom built assemblies are available. Contact your local Salisbury Representative for more information.

2115

1785

Clear Jumper with Cable

1610

Cat. No.	Main Line Range	Max Amps Continuous	Rating	OAL Length in. (mm)	Weight ea. lbs. (kgs)
1610	954 MCM (1.25"-.162")	400	36 kV Ø-Ø 21 kV Ø-GRD	11 (279)	14 (6.4)
1785	477 MCM (.9"-.162")	400	36 kV Ø-Ø	11.5 (292 mm)	8 (3.6)
2115	954 MCM (1.25"-.162")	400	21 kV Ø-GRD	11.5 (292 mm)	10 (4.5)

Assembled 10 ft. / 3m Jumper Sets (Unshrouded Ferrules)

	Jumper Cat. No.	Cable Size	Cable Cat. No.	Ferrule Cat. No.	Max Amps Continuous	Weight ea. lbs. (kgs)
1785 Clamp	**2067**	#2-15 kV	2754	2022	200	9.9 (4.5)
	2178	2/0-15 kV	2756	2024	300	13.9 (6.3)
2115 Clamp	**2074R1**	#2-15 kV	2754	2022	200	10.9 (4.9)
	2164	2/0-15 kV	2756	2024	300	14.8 (6.8)
	2174R1	1/0-15 kV	2755	2023	250	16.8 (7.6)

Assembled Jumper Sets (Unshrouded Ferrules)

	Jumper Cat. No.	Cable Length	Cable Size	Cable Cat. No.	Ferrule Cat. No.	Max Amps Continuous	Weight ea. lbs. (kgs)
1610 Clamp	**2772**	10'	2/0-15kV	2756	2024	300	5.8 (2.9)
	2773	10'	4/0-15kV	2757	2025	400	20.3 (9.2)
	2450	10'	1/0-15kV	2755	2023	250	15 (6.8)
	2066	12'	1/0-35kV	2059	2023	250	20.3 (9.2)
	20876	12'	2/0-35kV	4370	2024	300	21.5 (9.8)

Stirrup Clamps are used to convert a hand installed jumper into a stick installed jumper. The stirrup is designed to accept all conventional jumper heads.

The **Hot Jumper Parking Stand** safely holds either hand or stick installed hot bypass jumpers. This insulated tool removes the risk of accidental contact with the uninstalled end of an energized jumper. Installs by hand using rubber insulating gloves or with a standard shotgun stick. The fiberglass jumper hanger bar will accommodate standard size mechanical jumper heads.

The **Connector link** connects two insulated jumpers to create a longer jumper length. After the two clamps are connected to the link, the assembly can be wrapped with a small rubber insulating blanket.

21132RG

Parking Stand Installation with Shotgun Stick

4245

2750

Cat. No.	Main Line Range	Description	Max. Amps Continuous	Weight ea. lbs. (kgs)
2750	--	Connector Link	400	.3 (.1)
21132RG	1033 MCM ASCR to #6 Sol. 1.25"-.16" (32-4.1mm)	Hot Jumper Stirrup Clamp	400	3.0 (1.4)
4245	954 MCM ACSR to #6 Sol. 1.14"- .16" (29- 4.1 mm)	Parking Stand for Hot Jumpers	n / a	3.5 (1.6)

STICK INSTALLED FLEXIBLE JUMPERS

Stick Installed Flexible Jumpers can be manufactured for hot stick operations using Salisbury heavy-duty eye clamps. Clamps are rated for continuous current and fit all standard shotgun type hot sticks. For ease of application, a Hanger Stud is recommended. Shrouded ferrules are not recommended for use with eye type clamps.

Custom built assemblies are available. Contact your local Salisbury Representative for more information.

2300

Cat. No.	Main Line Range	Max Amps Continuous	Components	Rating	Weight ea. lbs. (kgs)
2300	1431 ACSR to #6 Sol. 1.5"- .16"	250	2#1895 Alum "C" Clamp 1#1928A Hanger Stud 1#2027 Alum Ferrule 10' #2755 1/0 15kV Cable	15 kV Ø-Ø	16 (7.3)
2308		200	2#1895 Alum "C" Clamp 1#1928A Hanger Stud 1#2026 Alum Ferrule 12' #2754 #2 15kV Cable	15 kV Ø-Ø	10.8 (4.9)
2317		250	2#2195 Alum "C" Clamp 1#1928A Hanger Stud 1#2027 Alum Ferrule 12' #2059 1/0 35kV Cable	35 kV Ø-Ø	16 (7.3)
2318		300	2#2318 Alum "C" Clamp 1#1928A Hanger Stud 1#2620 Alum Ferrule 12' #2756 2/0 15kV Cable	15 kV Ø-Ø	15.6 (7.1)
2559	1033 ASCR to #6 Sol. 1.25"- .16"	250	2#1853 Alum Duckbill Clamp 1#1858A Hanger Stud 1#2027 Alum Ferrule 10' #2755 1/0 15kV Cable	15 kV Ø-Ø	16 (7.3)
2877	795 ASCR to #8 Sol. 1.12"- .12"	250	2#2532 Alum "C" Clamp 1#2537A Hanger Stud 1#2027 Alum Ferrule 10' #2755 1/0 15kV Cable	15 kV Ø-Ø	11 (5.0)
9976		250	2#9985 Brnz "C" Clamp 1#9983A Hanger Stud 1#2023 Cu Ferrule 10' #2755 1/0 15kV Cable	15 kV Ø-Ø	12 (5.4)
9977		250	2#2937 Brnz "C" Clamp 1#9983A Hanger Stud 1#2023 Cu Ferrule 10' #2059 1/0 35kV Cable	35 kV Ø-Ø	12.5 (5.6)

Flexible Insulated Jumper Cables are lightweight and resistant to oil, heat, moisture, ozone and abrasion. The cable is embossed every three feet with conductor size and kV rating.

All jumper cables use fine stranded conductor and a new EPR low temperature Unipass orange CV cured jacket. The fine stranded copper conductor is alloy coated and assembled in a unidirectional rope lay for extra flexibility. The conductor has a semiconducting shield surrounding it to relieve voltage stress and improve dielectric strength and service life.

Cable meets requirements of ASTM F2321.

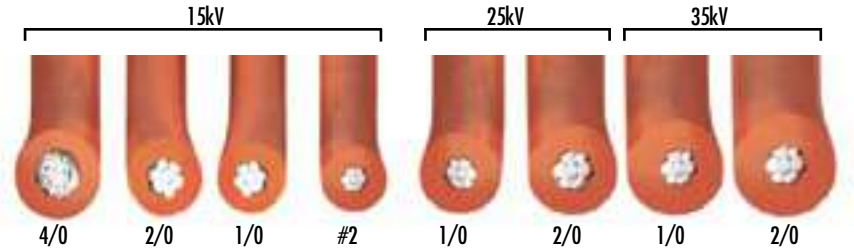

Cat. No.	Size & Str. AWG	kV Rating Ø to Ø	Nominal Ø to Grd	Str. Dia. in. (mm)	O.A. Dia. in. (mm)	Max Amps Continuous	Weight per 1000 ft. lbs.	kgs
2754	#2-259W	15	10	.320 (8.1)	.75 (19)	200	440	199
2755	1/0-413W	15	10	.403 (10.2)	.83 (21)	250	600	272
2756	2/0-427W	15	10	.456 (11.5)	.90 (23)	300	710	322
2757	4/0-437W	15	10	.592 (15.0)	1.01 (25.6)	400	1050	476
21300	1/0-413W	25	15	.403 (10.2)	1.06 (27)	250	650	295
21060	2/0-427W	25	15	.456 (11.5)	1.10 (28)	300	750	341
2059	1/0-413W	35	20	.403 (10.2)	1.22 (31)	250	950	431
4370	2/0-427W	35	20	.48 (12.1)	1.31 (33.1)	300	1060	482

FERRULES

SHROUDED / UNSHROUDED

Ferrules are manufactured in two different styles: unshrouded and shrouded. Shrouded ferrules are compressed on both the conductor and the insulating jacket of the high voltage EPR cable to reduce bending stress. Shrouded ferrules are designed to be used on glove-installed high voltage jumpers. Unshrouded ferrules are crimped to the conductor strands only and can be used on either stick- or glove-installed jumpers.

Ferrules are manufactured of 99.5% pure copper with industry standard 5/8”-11 NC threads. Ferrules are topped with a brass hex jam nut and toothed stainless steel lockwasher.

shrouded

unshrouded

Cat. No. Pair	Cable Size	Strand Die Codes T&B	Jacket Die Codes T&B	Burndy Die Number	Weight ea. lbs. (kgs)
SHROUDED					
2012	#2-15 kV ERP	66	106	-	1.2 (.5)
2013	1/0-15 kV ERP	66	106	-	1.2 (.5)
2014	2/0-15 kV ERP	66	106	-	1.1 (.5)
2015	4/0-15 kV ERP	66	106	-	0.9 (.4)
21353	1/0-25 kV	66	112	-	1.1(.5)
21354	2/0-25 kV	66	112	-	1.1 (.5)
21356	2/0-35 kV	66	125	-	1.1 (.5)
UNSHROUDED - Tin Plated			**Strand Die Codes**		
2022	#2	50	-	U243	0.5 (.2)
2023	1/0	50	-	U243	0.4 (.2)
2024	2/0	60	-	U245	0.4 (.2)
2025	4/0	66	-	U247	0.6 (.3)

Add suffix “A” to the catalog number when requesting a custom insulated jumper set.

TEMPORARY PROTECTIVE GROUNDING EQUIPMENT

TEMPORARY PROTECTIVE GROUNDING EQUIPMENT

NOTE:

When ordeing assemblies of grounding products, please make sure all items included in the assembly are only from the product line found within this section. Including items from other grounding equipment sections of this book will add additional shipping time.

Grounding Configurator™

The Grounding Configurator™ makes ordering grounding equipment simple and easy. This interactive web tool allows you to easily build the proper temporary grounding equipment for your specific needs. The step by step process takes out the guess work, and makes it easy to change components until the most appropriate ground set is developed.

Just go to our web site and give it a try. You will be prompted from start to finish. All you need to know is the maximum fault current, its duration and the size of cable required on the fault, and the configurator will do the rest. No more second guessing quantities or parts to be sure that you have put together a ground set that will function just as you expect. When you finish, enter your personal information and the configurator will instantly provide you with the bill of materials including part numbers. All that's left to do is to place the order!

Salisbury's Grounding Configurator™ 48-Hour Shipping

Need grounding equipment fast? Salisbury's 48-Hour Shipping Grounding Configurator™ works just as great as our standards Grounding Configurator, but it includes only our quick-ship items. Get the grounding equipment you need as fast as you need it.

Visit **salisburybyhoneywell.com** to use the exclusive Grounding Configurator™ and 48-Hour Grounding Configurator™.

How to specify temporary protective grounding assemblies.

A grounding assembly in its basic form consists of two clamps, one pair of ferrules and a length of cable.

The clamps can be identical to each other or quite different depending on each grounding application. Because of this, ground clamps are sold individually, not in pairs. Salisbury offers a wide variety of clamps including C-clamps, flat jaw clamps, socket clamps, duckbill clamps and specialty clamps for unique situations. Clamps are offered in either bronze or aluminum alloys and are manufactured to meet the current specifications of ASTM F 855.

To attach a clamp to the grounding cable requires the use of a ferrule. Ferrules are compressed on the strands of the cable to provide a low resistance permanent connection. The size of the ferrule is determined by the size of the cable. Ferrules are available in aluminum or plated copper. Plated copper ferrules can be used with either aluminum or bronze clamps. Two ferrules are required for each assembly therefore they are sold in pairs. Ferrules are manufactured to the specifications of ASTM F 855.

The final component that makes up a ground set is the grounding cable itself. The size of the cable is dependent on the short circuit current capacity of the system being grounded. Once this is determined, only the length of the cable and the color of the jacket need to be specified to complete the assembly.

Ground Set Checklist

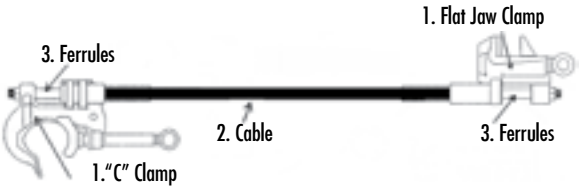

1. Specify the clamps. Two are required for a complete assembly. The maximum amperage of the clamp is designated by the ASTM grade of each clamp. Be sure that the clamp will meet or exceed the maximum amperage rating of the ground cable that it will be used with.

2. Specify the cable. Once the short circuit capacity of the system has been determined, choose the appropriate size cable. Specify the cable length, and the color of the jacket desired.

3. Specify the ferrules. One pair of ferrules is required per assembly. The size of the ferrule must match the size of the cable that it will be used with. Specify whether copper or aluminum, and threaded or plain.

4. Specify the options. List any optional equipment that is desired. This can include hanger studs, contact studs, heat shrink tubing, markings, clear strain relief, etc.

Options also include a ground set label. These optional labels include the date of manufacture and are available upon request when ordering.

DUCK BILL GROUNDING CLAMPS

.96", 1.1", AND 1.65" SIZES

1793

21030

1853

21754

1855 - Stick Mounted Duck Bill Clamp

	Cat. No.	Eye & Clamp Description	ASTM Grade / Class	Main Line Range	Continuous Current Rating	Weight ea. lbs. (kgs)
BRONZE	**556 KCM SMOOTH JAW BRONZE DUCK BILL --Gravity Actuated - "V" Thread**					
	1793	Eye w/ strain relief sleeve	4 / A Smooth Jaw	556 MCM ACSR to #6 .96" - .16" 24mm - 4mm Dia.	350 RMS Amps 60 Hz	1.3 (.6)
	21080	Eye w/o strain relief sleeve				1.1 (.5)
	1797*	Mounted w/ strain relief sleeve				4.3 (2)
	2093	Hanger Stud only				.4 (.1)
ALUMINUM	**1.1" SMOOTH JAW ALUMINUM DUCK BILL --Spring Loaded - "V" Thread**					
	21030	Eye w/ strain relief sleeve	5 / A Smooth Jaw	795 KCM ACSR to #6 1.1" - .16" 28mm - 4mm Dia.	400 RMS Amps 60 Hz	1.1 (.5)
	21059	Eye w/o strain relief sleeve				1.0 (.5)
	21081*	Mounted w/ strain relief sleeve				4.3 (2)
	21754	Hanger Stud only				.3 (.1)
	1.66" SERRATED JAW ALUMINUM DUCK BILL --Spring Loaded - "V" Thread					
	2553	Eye w/o strain relief sleeve	5 / B Serrated Jaw	1590 MCM ACSR to #6 1.65" - .16" 42mm - 4mm Dia.	400 RMS Amps 60 Hz	1.4 (.6)
	1855*	Mounted w/ strain relief sleeve				4.7 (2.1)
	21754	Hanger Stud only				.3 (.1)
	1.66" SERRATED JAW ALUMINUM DUCK BILL - Acme thread					
	1853	Eye w/ strain relief sleeve	5 / B Serrated Jaw	1590 MCM ACSR to #6 1.65" - .16" 42mm - 4mm Dia.	400 RMS Amps 60 Hz	1.5 (.7)

*Mounted: 1.25" dia x 6' Fiberglass Hot Stick permanently mounted

"C" TYPE GROUNDING CLAMPS

.83" AND 1.12" SIZES

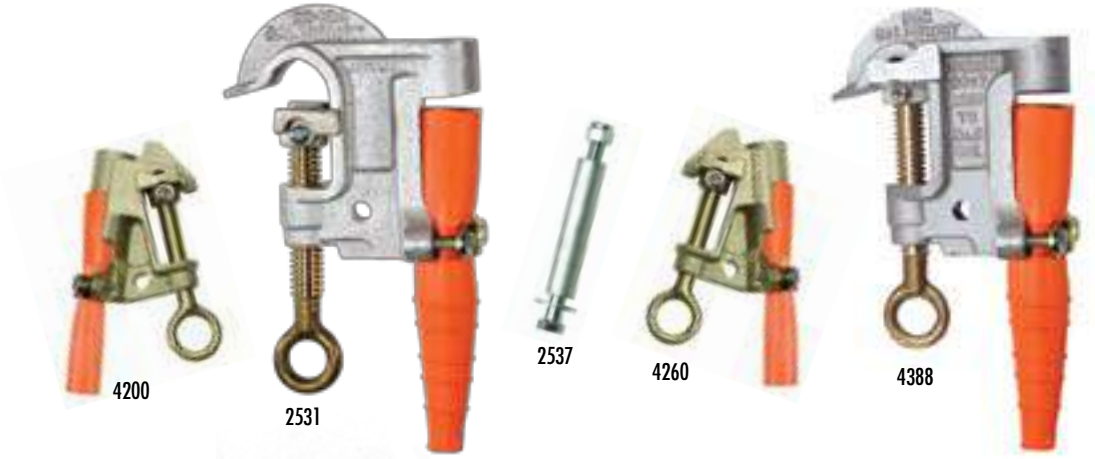

	Cat. No.	Eye & Clamp Description	ASTM Grade / Class	Main Line Range	Continuous Current Rating	Weight ea. lbs. (kgs)
BRONZE	**477 MCM BRONZE "C" CLAMP w/ Curved Lower Jaw - "V" Thread**					
	4200	Eye	5 / A	477 MCM 18 x 1 ACSR		1.1 (.5)
		w/ strain relief sleeve	Smooth Jaw	to		
	21067	Eye		#8	400 RMS Amps	1.0 (.4)
		w/o strain relief sleeve			60 Hz	
	4260	Eye	5 / B	.83" - .12"		1.1 (.5)
		w/ strain relief sleeve	Serrated Jaw	21mm - 3mm Dia.		
	21068	Eye				1.0 (.4)
		w/o strain relief sleeve				
	2093	Hanger Stud only				.4 (.2)
ALUMINUM	**1" ALUMINUM "C" CLAMP - Acme thread**					
	2531	Eye	5 / A	795 MCM 26 x 7 ACSR		1.1 (.5)
		w/ strain relief sleeve	Smooth Upper	to		
	2532	Eye	Jaw w/	#8		1.1 (.5)
		w/o strain relief sleeve	Flat Lower Jaw			
	2533*	Mounted			400 RMS	4.2 (19)
		w/ strain relief sleeve			60 Hz	
	4388	Eye	5 / B	1.12" - .12"		1.5 (.7)
		w/ strain relief sleeve	Smooth Upper	29mm - 3mm Dia.		
	4389	Eye	Jaw w/			1.1 (.5)
		w/o strain relief sleeve	Curved Lower Jaw			
	2537	Hanger Stud only				.2 (.1)

*Mounted: 1.25" dia x 6' Fiberglass Hot Stick permanently mounted

"C" TYPE GROUNDING CLAMPS

1.12" SIZES

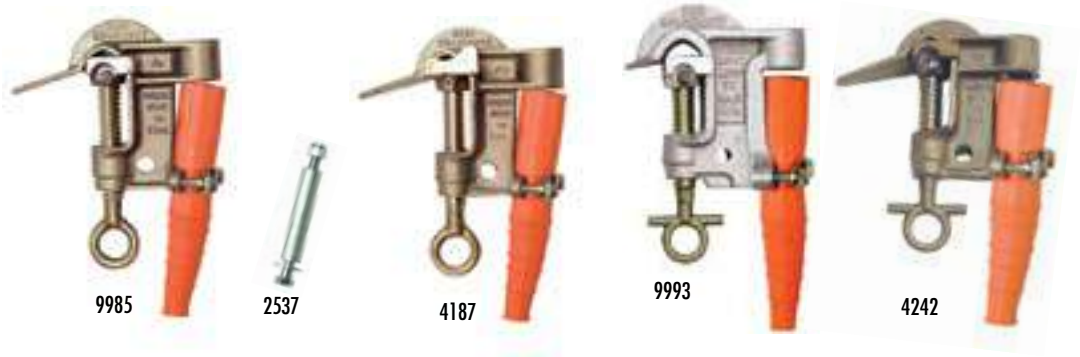

	Cat. No.	Eye & Clamp Description	ASTM Grade / Class	Main Line Range	Continuous Current Rating	Weight ea. lbs. (kgs)
BRONZE	**1" Bronze "C" Clamp - Acme thread**					
	9985	Eye	5 / A Smooth Jaw	795 MCM 26 x 7 ACSR to #8	400 RMS Amps 60 Hz	1.9 (.9)
		w/ strain relief sleeve				
	2937	Eye				1.8 (.8)
		w/o strain relief sleeve				
	4280*	Mounted		1.12" - .12" 29mm - 3mm Dia.		4.9 (2.2)
		w/ strain relief sleeve				
	4187	Eye	5 / B Serrated Jaw			1.9 (.9)
		w/ strain relief sleeve				
	2537	Hanger Stud only				.4 (.2)
BRONZE	**GRADE 5 "T" / EYE "C" CLAMP - Acme Thread**					
	4242	"T" w/ strain sleeve & "T" eye screw	5 / A Smooth Jaw	795 MCM 26" x 7"ACSR to #6	400 RMS Amps 60 Hz	1.9 (.9)
ALUMINUM	**9993**	"T" w/ strain sleeve & "T" eye screw		1.12" - .16" 29mm - 4mm Dia.		1.6 (.7)

*Mounted: 1.25" dia x 6' Fiberglass Hot Stick permanently mounted

"C" TYPE GROUNDING CLAMPS

1.26" AND 1.5" SIZES

4255

24410

1895

21099

9983

	Cat. No.	Eye & Clamp Description	ASTM Grade / Class	Main Line Range	Continuous Current Rating	Weight ea. lbs. (kgs)
BRONZE	**1.25" BRONZE "C" CLAMP - Acme Thread**					
	9984	Eye	5 / A			2.2 (1.0)
		w/ strain relief sleeve	Smooth Jaw			
	1897	Eye	w/			2.1 (.9)
		w/o strain relief sleeve	Flat Lower Jaw	1035.5 KCM ACSR		
	4255	Eye	5 / A	to #6		2.2 (1.0)
		w/ strain relief sleeve	Smooth Jaw		400 RMS Amps	
	21069	Eye	w/		60Hz	2.1 (.9)
		w/o strain relief sleeve	Curved Lower Jaw	1.26 " - .16"		
	4279	Eye	5 / B	32mm - 4mm Dia.		2.2 (1.0)
		w/ strain relief sleeve	Serrated Jaw			
	21070	Eye	w/			2.1 (.9)
		w/o strain relief sleeve	Flat Lower Jaw			
	9983	Hanger Stud only				.4 (.2)
ALUMINUM	**1.25" ALUMINUM "C" CLAMP - Acme Thread**					
	24410	Eye	5 / A	1035.5 KCM ACSR		2.2 (1.0)
		w/ strain relief sleeve	Smooth Jaw	to #6	400 RMS Amps	
			w/ Flat Lower Jaw	1.26 " - .16"	60Hz	
				32mm - 4mm Dia.		
	1.5" ALUMINUM "C" CLAMP, w/ flat lower jaw - Acme Thread					
	1895	Eye				1.7 (.8)
		w/ strain relief sleeve				
	2195	Eye		1431 KCM ACSR		1.5 (.7)
		w/o strain relief sleeve	5 / B	to #6	400 RMS Amps	
	1896*	Mounted	Serrated Jaw	1.5" - .16"	60 Hz	4.8 (2.1)
		w/ strain relief sleeve		to #6		
	21099	"T"		38mm - 4mm Dia.		1.7 (.8)
		w/ strain relief sleeve				
	1928	Hanger Stud only				.2 (.1)

*Mounted: 1.25" dia x 6' Fiberglass Hot Stick permanently mounted

"C" TYPE GROUNDING CLAMPS

2" SIZES

21074

Now Grade 5H!

1928

20882

Now Grade 5H!

ALUMINUM

	Cat. No.	Eye & Clamp Description	ASTM Grade / Class	Main Line Range	Continuous Current Rating	Weight ea. lbs. (kgs)
	2 " ALUMINUM "C" CLAMP w/ Curved Lower Jaw - Acme Thread					
Now Grade 5H!	**21074**	Eye	5H / A			2.1 (1.0)
		w/ strain relief sleeve	Smooth Jaw	3000 KCM ACSR		
	21075	Eye	5 / A		400 RMS Amps	2 (.9)
		w/o strain relief sleeve	Smooth Jaw	to #6		
Now Grade 5H!	**20882**	Eye	5H / B		60 Hz	2.1 (1.0)
		w/ strain relief sleeve	Serrated Jaw			
	21077	Eye	5 / B	2"-.16"		2 (.9)
		w/o strain relief sleeve	Serrated Jaw	51mm - 4 mm		
	1928	Hanger Stud only				.2 (.1)

"C" TYPE GROUNDING CLAMPS

2.4" SIZE

1924 - Stick Mounted "C" Type Clamp

1923

4377

1921

4295

Now Grade 5H!

	Cat. No.	Eye & Clamp Description	ASTM Grade / Class	Main Line Range	Continuous Current Rating	Weight ea. lbs. (kgs)
ALUMINUM	**2.4 " ALUMINUM "C" CLAMP w/ Flat Lower Jaw - Acme Thread**					
	1923	Eye				2.1 (1.0)
		w/ strain relief sleeve				
	4377	Eye strain relief				2.1 (1.0)
		sleeve & oval eye	5 / A			
	4240	Eye	Smooth Jaw	2.0" I.P.S.		2.0 (1.0)
		w/o strain relief sleeve		to #6		
	1924*	Mounted				5.1 (2.3)
		w/ strain relief sleeve			400 RMS Amps	
	1921	Eye			60 Hz	2.2 (1.0)
		w/ strain relief sleeve		2.4" - .16"		
	4390	Eye strain relief	5 / B	61mm - 4mm Dia.		2.2 (1.0)
		sleeve & oval eye	Serrated Jaw			
	1922*	Mounted				5.2 (2.3)
		w/ strain relief sleeve				
	1928	Hanger Stud only				
BRONZE	**2.4" BRONZE "C" CLAMP w/ flat lower jaw - Acme Thread**					
	4295	Eye		2.0 " I.P.S. to #6		4.1 (1.8)
		w/ strain relief sleeve	5H / A		400 RMS Amps	
	4311	Eye	Smooth Jaw	2.4" - .16"	60 Hz	4.0 (1.7)
		w/o strain relief sleeve		61mm - 4 mm Dia.		

Now Grade 5H!

*Mounted: 1.25" dia x 6' Fiberglass Hot Stick permanently mounted

PRESSURE TERMINAL CLAMPS

These **Duckbill** and **"C" Clamps** feature pressure terminations for use with plain ferrules. Made of high strength aluminum, with bronze eye-screws, these Grade 5 clamps are designed for smooth operation and long service life. Duckbill clamps for all grounding applications from .16 to 1.1" diameter. "C" clamps for all grounding applications from .06 to 1.26" diameter.

Flat Jaw Grounding Clamps are now available with pressure terminals for use with plain cable ferrules. These clamps are made of a high strength aluminum, and a bronze eye screw or "T" handle for durability and smooth operation. Also featured is a hardened aluminum alloy serrated insert. This insert is designed to grip tightly to flat surfaces and cut through surface contamination and oxidation for low resistance contact. The pressure termination is designed on an angle keeping the cable out of the way during installation. The cable termination is angled to minimize interface with the "T" handle or eye when installing or removing the clamp.

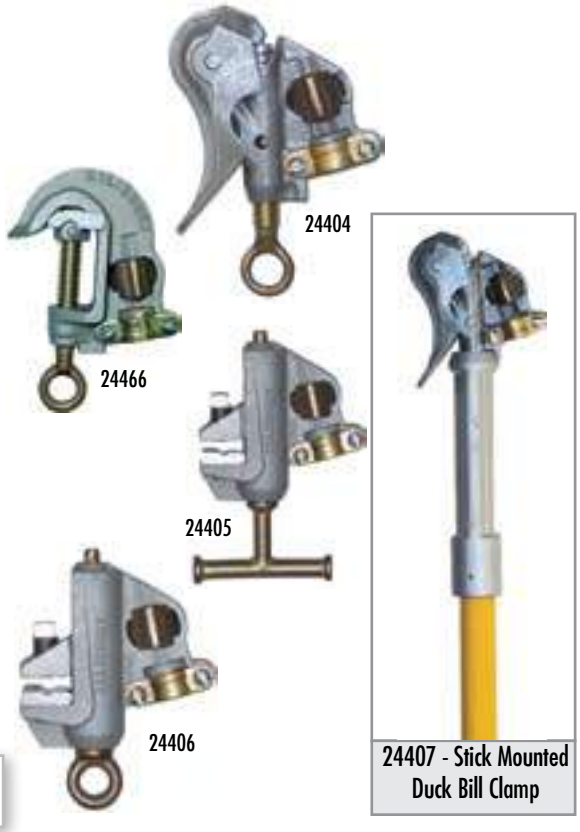

Salisbury's **24438 Plain Ferrule 4-way Connector** is available on page H-25.

ALUMINUM

Cat. No.	Eye & Clamp Description	ASTM Grade / Class	Main Line Range	Continuous Current Rating	Weight ea. lbs. (kgs)
1.1" SMOOTH JAW ALUMINUM --Spring Loaded - "V" Thread					
24404	Duckbill	5 / A	795 KCM ACSR	400 RMS Amps	1.5 (.68)
	Eye w/o strain relief sleeve	Smooth Jaw	to #6	60 Hz	
			1.1" - .16"		
			28mm - 4mm Dia.		
1.25" SMOOTH JAW ALUMINUM --Spring Loaded - Acme Thread					
24466	"C" Type	5 / B	1035.5 KCM ACSR	400 RMS Amps	2.2 (1.0)
	Eye w/o strain relief sleeve	Serrated	to #6	60 Hz	
			1.26" - .06"		
			32mm - 1.5mm Dia.		
24407	Stick mounted duckbill clamp				4.5 (2.05)
21754	Hanger Stud only				.3 (.1)
2" SMOOTH JAW ALUMINUM --Spring Loaded - Acme Thread					
21942	"C" Type	5 / B	1035.5 KCM ACSR	400 RMS Amps	2.2 (1.0)
	Eye w/o strain relief sleeve	Serrated	to #6	60 Hz	
			1.26" - .06"		
			32mm - 1.5mm Dia.		
ALUMINUM FLAT JAW Grounding Clamp - Acme Thread					
24405	"T" screw	5 / B	1.5" - .06"	400 RMS Amps	2.1 (.9)
	no strain relief sleeve	Serrated Jaw	Flat or Square	60Hz	
24406	Eye screw		1.26" - .06"		2.0 (.9)
	no strain relief sleeve		32 - 1.5 mm Dia.		

GROUNDING CLAMPS FOR SUBSTATION BUSES

ALUMINUM

Cat. No.	Eye & Clamp Description	ASTM Grade / Class	Main Line Range	Continuous Current Rating	Weight ea. lbs. (kgs)
3.5" ALUMINUM "C" CLAMP for Substation Buses - Acme Thread					
4282	Eye w/ strain relief sleeve	5 /A Smooth Jaw w/ Flat Lower Jaw	3" - 1.5" I.P.S. 3.5" - 1.75" 89mm - 44mm Dia.	400 RMS Amps 60 Hz	2.8 (1.3)
4283*	Mounted w/ strain relief sleeve				5.8 (2.5)
21953 (21953 Now Grade 5H!)	Eye w/ strain relief sleeve	5H /A Smooth Jaw w/ Flat Lower			
4341	Eye, strain relief w/ sleeve & long eye screw (Main line range 3.5"-.16"(89-4mm)	5 /A Smooth Jaw w/ Flat Lower Jaw	3" I.P.S. to #6 3.5" - .16" 89mm - 4 mm Dia.		2.9 (1.4)
21985†	Eye, strain relief sleeve & long eye screw	6 / B Serrated Jaw w/ Flat Lower Jaw		450 RMS Amps 60 Hz	3.0 (1.5)
6.62" ADJUSTABLE ALUMINUM " C " CLAMP for Round, Square, Rectangle or "H" Section Substation Buses - Acme Thread					
2991 (2991 Now Grade 5H!)	Eye w/ strain relief sleeve	5H / A Smooth Jaw w/ Flat Lower			6.9 (3.1)
2993**	Eye w/ welded single contact stud	5 / A Smooth Jaw w/ Flat Lower Jaw	6.12" I.P.S. 6.62" - .4" 168mm - 10mm Dia.	400 RMS Amps 60 Hz	7.0 (3.2)
9967**	Eye w/ welded double contact stud				7.3 (3.3)
4378	Eye, strain relief sleeve & oval eye				6.9 (3.1)

*Mounted: 1.25" dia x 6' Fiberglass Hot Stick permanently mounted
**No Ferrule Connection
†Accepts 3/4 - 10 ferrule threads

GROUNDING CLAMPS

FOR FLATS, ANGLES & ROUNDS

Flat Jaw Grounding Clamps are available with either a large "T" handle or with an eye for clampstick application. The handles and eyes are designed so that the cable will not interfere with the torquing of the clamp. The set screw that secures the clamp to a flat surface is located on the movable jaw on all designs. When tightened, the set screw forces the fixed jaw of the clamp firmly against the flat ensuring a consistent low resistance current path directly through the body of the clamp to the cable connection. With other designs having a set screw on the fixed jaw, current is required to flow through mechanical connections between the movable jaw, the eye screw, and the body of the clamp before passing to the cable connection.

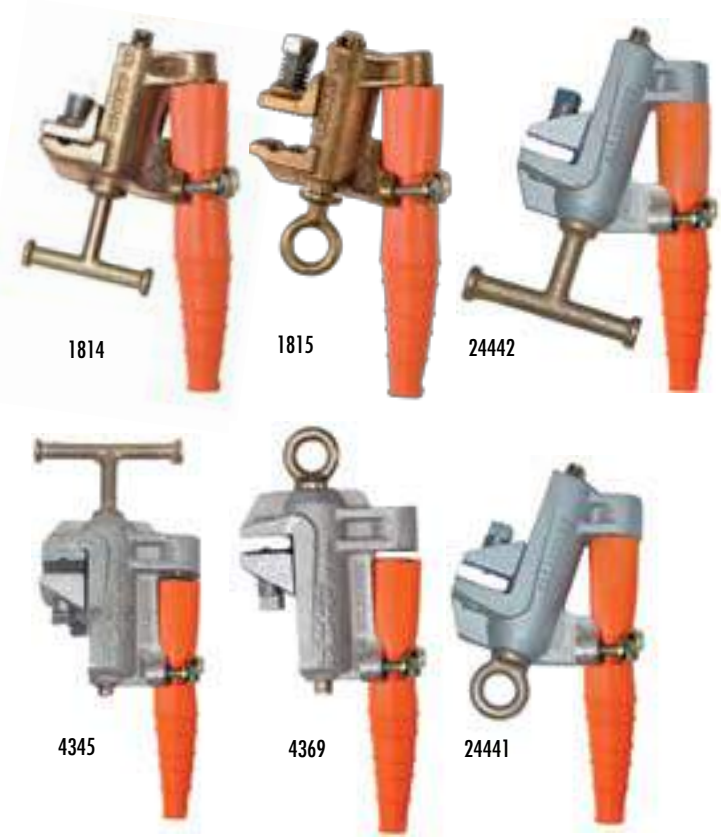

	Cat. No.	Eye & Clamp Description	ASTM Grade / Class	Main Line Range	Continuous Current Rating	Weight ea. lbs. (kgs)
BRONZE	**GRADE 3 BRONZE FLAT JAW Grounding Clamps - "V" Thread**					
	1814	"T" w/ strain	3 / B	1.5" - .06"	300 RMS Amps	1.7 (.8)
		sleeve & "T" screw	Serrated Jaw	Flat or Square	60Hz	
	1815	Eye w/ strain		1.26" - .06"		1.6 (.7)
		sleeve & eye screw		32mm - 1.5 mm Dia.		
ALUMINUM	**GRADE 5 ALUMINUM FLAT JAW Grounding Clamp - Acme Thread**					
	4345	"T" w/ strain	5 / B	1.5" - .06"	400 RMS Amps	2.1 (.9)
		sleeve & "T" screw	Serrated Jaw	Flat or Square	60Hz	
	24442	"T" w/ strain				2.1 (.9)
		sleeve & "T" screw				
	4369	Eye w/ strain		1.26" - .06"		2.0 (.9)
		sleeve & eye screw		32mm - 1.5 mm Dia.		
	24441	Eye w/ strain				2.0 (.9)
		sleeve & eye screw				

*Mounted: 1.25" dia x 6' Fiberglass Hot Stick permanently mounted

HEAVY DUTY DUAL-PURPOSE CLAMPS

The **Heavy Duty Bronze "C" Type Flat Jaw Clamp** with anti-blow off keeper is made to fit structural angles, flats, and copper or copperweld stranded grounding assemblies. To install, first use an abrasive cloth or wire brush to clean the surface to be clamped. Then, wipe the surface clean, position the clamp, finger tighten and set the screws. Use a wrench to secure and tighten. A 2667 clamp with contact stud offers greater versatility.

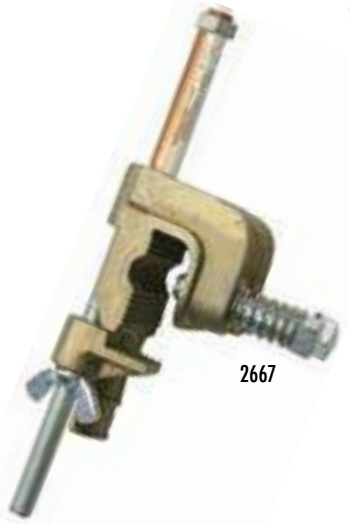

2667

2567

Now Grade 5H!

2567 Now Grade 5H!

Cat. No.	Eye & Clamp Description	ASTM Grade / Class	Main Line Range	Continuous Current Rating	Weight ea. lbs. (kgs)
2567	w/ Strain Relief Sleeve 5/8"-11NC Connection	5H / B Serrated Jaw	Angles & Flats: 2.5"-4" WX (64-101 x 3-19mm) Rounds: .25"-.75" (6-19mm) Dia.	5/8-11UNC Max. Cable Size 4/0 Type V Compression Ferrules	4 (1.8)
2577	w/ Strain Relief Sleeve 3/4"-10NC Connection	6 / B Serrated Jaw	Angles & Flats: 2.5"-4" WX (64-101x3-19mm) Rounds: .25"-.75" (6-19mm) Dia.	3/4-10UNC Max. Cable Size 250 MCM Type V Compression Ferrules	4 (1.8)
2667	2567 Clamp w/ Contact Stud	5 / B Serrated Jaw	Angles & Flats: 2.5"-4" WX (64-101 x 3-19mm) Rounds: .25"-.75" (6-19mm) Dia.	5/8-11UNC Max. Cable Size 4/0 Type V Compression Ferrules	5 (2.3)

Cutout Clamps are applied with a clampstick into the bottom hinge contact of a cutout. This clamp can be used as part of a ground assembly or by using a contact stud using a standard grounding assembly with "C" clamps from the stud to ground.

Lightweight, heavy duty **Stringing Ground** installs anywhere along the length of conductor to provide a continuous grounding bond, even if the conductor is slack. Constructed of high-strength aluminum alloy with large diameter sheaves and bronze bushing bearings. Side opening for quick, easy installation. Adjustable compression spring assures proper contact for different sizes of conductor and for easy passage of splices. In tests, this clamp withstood a 25kA, 28 cycle short circuit. The three options for a ground tap connection are: termination for ground cables, contact/hanger stud and connector for ground wire.

Cutout Clamp with Contact Stud

Cutout Clamp Jumper Assembly

	Cat. No. & Description		ASTM Grade / Class	Main Line Range	Continuous Current Rating	Weight ea. lbs. (kgs)
BRONZE	**BRONZE CUTOUT CLAMPS - "V" Thread**					
	4310	Eye	Grade 5	5/8 - 11 UNC	400 RMS Amps	2.1 (1.1)
		w/ ferrule connection		Max. Cable Size: 470		
	4373	Eye		Type VI		3.3 (1.5)
		w/ contact stud				
	4379	Contact stud only		Threaded Stud	60 Hz	1.2 (.5)
				Compression Ferrule		
ALUMINUM	**STRINGING GROUND**					
	2155	Stringing ground	Alloy Rollers	1033.5 KCM ACSR-		5.3 (2.4)
			Smooth Contacts	to #2 Sol	300 RMS Amps	
			5 / A	1.26"-.25"		
				32mm - 6mm Dia	60 HZ	
				Splice: 1.5" (38mm) Dia		

BALL & SOCKET SYSTEM

SOCKET CLAMP & BALL STUD "C" CLAMP

The **Ball and Socket Grounding System** allows for variable angle accessibility. This system is compact and lightweight. There are fixed grounding points on the socket clamp. The 21190 Socket Clamp, made from bronze alloy, has a socket size of 1 inch (25.4mm) and a threaded bore boss of 5/8"-11 UNC. The socket clamp has an integral cable support with strain relief sleeve.

The Ball Stud "C" Clamp is an universal clamp that can be used in substations and on overhead lines. This universal clamp can be used as a socket clamp on a 1 inch (25.4mm) Ball Stud and as a 1 ½ inch (38mm) C-Clamp on overhead lines. The eye screw is not extended beyond the body of the clamp, minimizing possible thread damage during handling. Double lead V-thread allows for faster installation, minimizing worker fatigue. External and internal ball studs assembly can be used as a current carrying contact stud.

See page J-3 for ball socket studs and accessories available for both Ball & Socket clamps and Ball Stud "C" Clamps.

21190

NEW

22675

Specifications for Ball Stud "C" Clamp

- Aluminum clamp body
- Double lead V-thread eye screw is bronze alloy
- ASTM Type 1, Class A, Grade 5 rating
- Fault current ratings:
  - 43,000 Amps – 15 cycles
  - 30,000 Amps – 30 cycles
- Ferrule attachment:5/8" x 11 UNC for Grade 5 rating
- Grounding cable: #2 min size to 4/0 max size

Cat. No.	Description	ASTM Grade	Continuous Current Rating	Weight ea. lbs. (kgs)
21190	w/ Strain Relief Sleeve	5	400 Amps	1.2 (.54)
21277	w/o Strain Relief Sleeve	5	400 Amps	1.1 (.5)
22675	1" Ball Stud C-Clamp w/ strain relief	5	400 Amps	2.7 (x)
22704	1" Ball Stud C-Clamp w/o strain relief	5	400 Amps	2.6 (x)

Grounding Cables are made with extra flexible strand of soft drawn #30 AWG (.01") copper and are available in three different jackets.

The yellow thermoplastic elastomer jacketed cable is the standard for grounding service. It provides a combination of economy, flexibility, and durability. The service temperature ranges from 200º to -50ºF per ASTM F 855, Type I requirements.

The black thermoplastic elastomer jacketed cable has a smaller diameter and thinner jacket material giving it better flexibility than the yellow cable. The service temperature ranges from 200º to -50ºF per ASTM F 855, Type I requirements.

The PVC transparent flexible thermoplastic jacketed cable allows easy inspection for strand breakage. The flexibility decreases with low temperatures. The service temperature ranges from 140º to -40ºF per ASTM F 855, Type III requirements.

The silicone transparent flexible thermoplastic jacketed cable allows easy inspection for strand breakage. The service temperature ranges from 302º to -40ºF per ASTM F 855, Type I requirements.

	Cat No.	Size	Strand Dia. in. (mm)	Jacket in. (mm)	Short Circuit Withstand AMPS, RMS, 60Hz 15 Cycles	30 Cycles	Continuous Current AMPS, RMS, 60Hz	Wt. / 1000 ft. lbs. (kgs)
YELLOW	**2136**	#2-665W	.35 (8.9)	.5 (12.7)	14500	10000	200	282 (127)
	2137	1/0-1064W	.45 (11.4)	.62 (15.7)	21000	15000	250	488 (221)
	2138	2/0-1330W	.49 (12.4)	.65 (16.5)	27000	20000	300	537 (243)
	2139	4/0-2109W	.62 (1.7)	.83 (21.1)	43000	30000	400	836 (379)
BLACK	**2636**	#2-665W	.35 (8.9)	.47 (12)	14500	10000	200	263 (119)
	2637	1/0-1064W	.45 (11.4)	.58 (14.7)	21000	15000	250	404 (183)
	2638	2/0-1330W	.49 (12.4)	.63 (16)	27000	20000	300	497 (225)
	2649	3/0-1672W	.55 (14)	.72 (18.3)	36000	25000	350	680 (308)
	2639	4/0-2109W	.62 (1.7)	.78 (19.8)	43000	30000	400	770 (349)
PVC CLEAR	**2128**	#2-665W	.35 (8.9)	.53 (13.5)	14500	10000	200	289 (131)
	2129	1/0-1064W	.45 (11.4)	.64 (16.3)	21000	15000	250	520 (235)
	2133	2/0-1330W	.49 (12.4)	.7 (17.8)	27000	20000	300	546 (247)
	2288	4/0-2109W	.62 (1.7)	.84 (21.3)	43000	30000	400	841 (381)
CLEAR SILICONE	**21930**	2/0-1330W	.49 (12.4)	.62 (15.7)	27000	20000	300	487 (221)
	21931	4/0-2109W	.62 (1.7)	.78 (19.8)	43000	30000	400	579 (263)

THREADED GROUNDING FERRULES

Salisbury compression **Threaded Grounding Ferrules** provide low resistant connection to cable strands with a threaded stud that securely screws into a clamp. Nut and lock washers increase contact pressure and secure the assembly. Tin plated copper ferrules can be used on either bronze or aluminum body clamps. All Salisbury threaded grounding ferrules are unshrouded and manufactured with a 5/8-11 UNC threaded stud and meets the requirements of ASTM F855.

	Cat. No. Pair	ASTM Grade	Size	Installing Die Codes T&B	Burndy Die Numbers	Weight ea. lbs. (kgs)
ALUMINUM	**2026**	1	#2	50	-	.2 (.1)
	2027	2	1/0	50	-	.2 (.1)
	2620	3	2/0	60	-	.3 (.1)
	2640	5	4/0	71	-	.3 (.1)
COPPER	**2022**	1	#2	50	U243	.5 (.2)
	2023	2	1/0	50	U243	.4 (.2)
	2024	3	2/0	60	U245	.4 (.2)
	4277	4	3/0	66		.6 (.3)
	2025	5	4/0	66	U247	.6 (.3)

Add suffix "A" to the catalog number when requesting a custom insulated grounding set.

PLAIN SHROUDED & UNSHROUDED FERRULES

Plain Ferrules are designed for use with all grounding clamps that feature pressure terminal including the 1" duckbill and 1.5" flat jaw clamp.

Copper Ferrules are available in two different styles: unshrouded and shrouded. Shrouded ferrules are compressed on both the conductor and the jacket of the cable to reduce bending stress. Unshrouded ferrules are crimped on the conductor strands only. These ferrules are manufactured of tin plated, 99.5% pure copper.

Aluminum Ferrules are available in two different styles: unshrouded and shrouded. Shrouded ferrules are compressed on both the conductor and the jacket of the cable to reduce bending stress. Unshrouded ferrules are crimped on the conductor strands only.

plain shrouded

plain unshrouded

	Cat. No. Pair	Cable Size	Strand Die Codes T&B	Jacket Die Codes T&B	Burndy Die Number	Weight ea. lbs. (kgs)
COPPER	**SHROUDED**					
	24424	#2	50	71	-	0.3 (.14)
	24425	1/0	50	71	-	0.35 (.16)
	24426	2/0	60	76	-	0.4 (.18)
	24427	4/0	66	106	-	0.45 (.20)
	UNSHROUDED					
	24420	#2	50	-		0.3 (.14)
	24421	1/0	50	-	U243	0.3 (.14)
	24422	2/0	60	-	U245	0.35 (.16)
	24423	4/0	66	-	U247	0.35 (.16)
ALUMINUM	**SHROUDED**					
	24434	#2	50	71	-	0.1 (.045)
	24436	2/0	60	76	-	0.15 (.07)
	24437	4/0	71	106	-	0.15 (.07)
	UNSHROUDED					
	24430	#2	50	-	-	0.12 (.54)
	24431	1/0	50	-	-	0.12 (.54)
	24432	2/0	60	-	-	0.16 (.073)
	24433	4/0	71	-	-	0.16 (.073)

Add suffix "A" to the catalog number when requesting a custom insulated grounding set.

Strain Relief Sleeves reinforce cables at the termination points when used with the cable support system. This decreases strand damage to cables from age or mishandling which reduces current carrying capacity and service life. SALCOR® Strain Relief Sleeves accept all grounding cables #2 through 4/0. Sleeve assembly consists of two parts: the inner sleeve which is discarded if the cable diameter exceeds .72" and tapered outer sleeve, 6.5" long, which can be cut to match the diameters. Clear strain relief sleeves and heat shrink are available to fit ground clamps.

Cat. No.	Description	Weight ea. lbs. (kgs)
CABLE STRAIN RELIEF SLEEVES		
0786	Tapered Outer SALCOR Sleeve Only	.1 (.04)
1758	Inner SALCOR Sleeve Only	.1 (.04)
1788	Complete SALCOR Strain Relief Assembly	.1 (.04)
2633	Clear Sleeve for 4/0 Grounding Cable	.1 (.04)
2983	Clear Sleeve for #2 to 2/0 Grounding Cable	.1 (.04)
20886	Clear Heat Shrink, 5"(127mm) for All Grounding Cables	.1 (.04)

SINGLE GROUNDING ASSEMBLIES & SETS

Salisbury offers a variety of single grounding assemblies. These single ground assemblies offer versatility to the user when performing temporary grounding.

For ordering convenience, completed **Single Grounding Assemblies** are listed which cover many standard application needs. Modification to these sets to meet specific needs can be made. Contact your local Salisbury representative for assistance or visit www.whsalisbury.com/configurator/ to use our helpful online grounding configurator.

24309

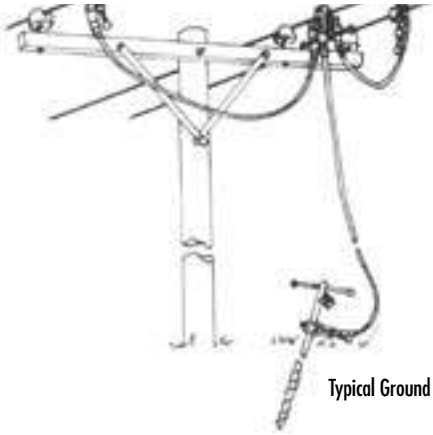

Typical Ground Cluster Set

Cat. No.	Description	ASTM Grade	Weight ea. lbs. (kgs)
SINGLE GROUNDING ASSEMBLIES			
24309	2 ea. #1895 Serrated Aluminum "C" Clamp 1.5" 1 pr. #2024 Ferrules 6 ft. #2138 2/0 Cu. Cable yellow	3	5.9 (2.7)

Optional ground set label available upon request when ordering.

SINGLE GROUNDING ASSEMBLIES & SETS

Cat. No.	Description	ASTM Grade	Weight ea. lbs. (kgs)
SINGLE GROUNDING ASSEMBLIES			
2299	2 ea. #1895 Serrated Aluminum "C" Clamp 1.5" 1 ea. #1928 Hanger Stud, 1 pr. #2027 Ferrules 6 ft. #2137 1/0 Cu. Cable	2	5.9 (2.7)
2319	2 ea. #1923 Smooth Aluminum "C" Clamp 2.4" 1 ea. #1928 Hanger Stud, 1 pr. #2620 Ferrules 10 ft. #2138 2/0 Cu. Cable	3	8.7 (3.9)
2320	1 ea. #1923 Smooth Aluminum "C" Clamp 1 ea. #4345 Aluminum Flat Jaw "T" Handle Clamp 1 pr. #2620 Ferrules, 15 ft. #2138 2/0 Cu. Cable	3	7.4 (3.4)
2321	2 ea. #1793 Bronze Duck Bill 556 KCM 1 ea. #2093 Hanger Stud, 1 pr. #2023 Ferrules 6 ft. #2137 1/0 Cu. Cable	2	5.4 (2.5)
2329	2 ea. #1921 Serrated Aluminum "C" Clamp 2.4" 1 ea. #1928 Hanger Stud, 1 pr. #2620 Ferrules 10 ft. #2138 2/0 Cu. Cable	3	9 (4.1)
2556	2 ea. #1852 Smooth Aluminum Duck Bill Clamp 1.66" 1 ea. #1858 Hanger Stud, 1 pr. #2027 Ferrules 6 ft. #2137 1/0 Cu. Cable	2	5.2 (2.4)
2558	2 ea. #1853 Serrated Aluminum Duck Bill Clamp 1.25" 1 ea. #1858 Hanger Stud, 1 pr. #2027 Ferrules 6 ft. #2137 1/0 Cu. Cable	2	5.5 (2.5)
2876	2 ea. #2531 Smooth Aluminum "C" Clamp 1.0" 1 ea. #2537 Hanger Stud, 1 pr. #2027 Ferrules 6 ft. #2137 1/0 Cu. Cable	2	4.9 (2.2)
9975	2 ea. #9985 Smooth Bronze "C" Clamp 1.0" 1 ea. #9983 Hanger Stud, 1 pr. #2023 Ferrules 6 ft. #2137 1/0 Cu. Cable	2	6.9 (3.1)
9982	2 ea. #9984 Smooth Bronze "C" Clamp 1.25" 1 ea. #9983 Hanger Stud, 1 pr. #2023 Ferrules 6 ft. #2137 1/0 Cu. Cable	2	8.3 (3.7)

Optional ground set label available upon request when ordering.

SINGLE POINT DISTRIBUTION GROUNDING SET

This **Single Point Distribution Grounding Set** creates an equal potential zone on the working structure. This is accomplished by bonding all conductors and the structure to a ground source using individual assemblies as shown in the adjacent drawing.

Going from either the ground rod or the system ground to the pole mounted contact bar under the worker's feet, to the assemblies bonding the conductors creates an equal potential zone.

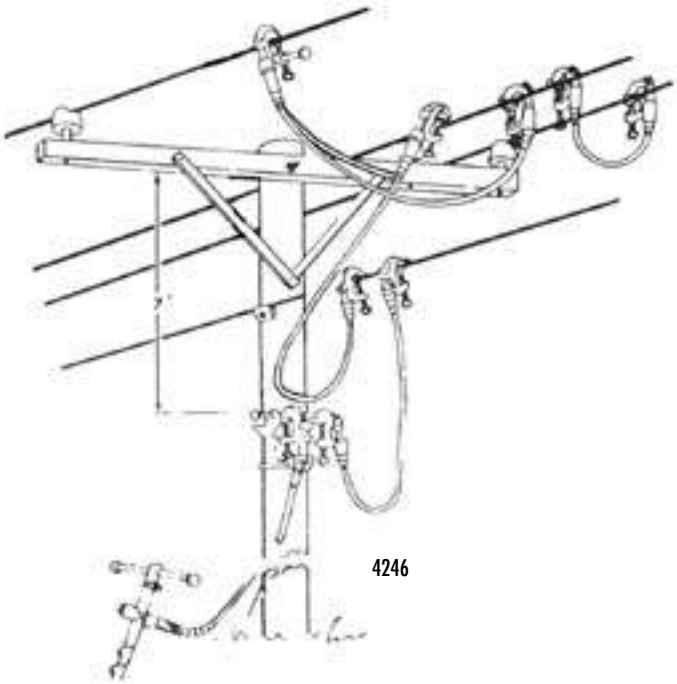

Cat. No.	Description	ASTM Grade	Weight ea. lbs. (kgs)
4246	Complete Distribution Grounding Set 10 ea. #2531 Smooth Aluminum "C" Clamps 795 KCM 1 ea. #9998 Aluminum Pole Mount Contact Bar 5 pr. #2026 Ferrules 3 ea. #2537 Hanger studs 60 ft. #2636 # Cu. Cable 1 ea. #2103 Screw Ground Rod w/ Connector	1	45.5 (20.6)

Additional Single Point Sets are available. Contact your local Salisbury representative.
Optional ground set label available upon request when ordering.

3 WIRE UNIVERSAL GROUNDING CLUSTERS & SETS

Grounding Clusters are used to make it easy for a single line worker to apply multiple grounding assemblies on a three phase system. All clusters have an option of a ground lead by using the extra connection point on each cluster. Three wire clusters are recommended for three phase Delta systems. Complete grounding cluster assemblies are available from the factory. Specify cable size and length required and assembly will be made to your specifications.

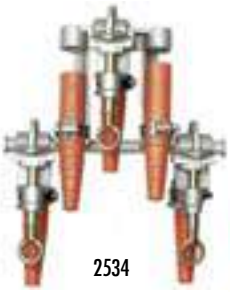
2534

1957

2547

1790

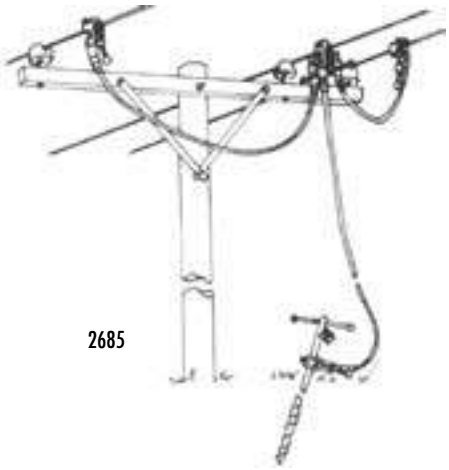
2685

Cat. No.	Description	ASTM Grade	Weight ea. lbs. (kgs)
1790	Cluster w/ 3 #1793 Smooth Jaw 556 KCM Bronze Duck Bill Clamps	4	6 (2.7)
1957	Cluster w/ 3 #1895 Serrated Jaw 1.5" Aluminum "C" Clamps	5	6.4 (2.9)
2534	Cluster w/ 3 #2531 Smooth Jaw 1" Aluminum "C" Clamps	5	4.9 (2.2)
2547	Cluster w/ 3 #1853 Serrated Jaw 1.66" Aluminum Duck Bill Clamps	5	5.4 (2.5)
2685	Assembled Ground Cluster Set 1 ea. #2516 Serrated Aluminum "C" Clamp 1.25" Cluster 74 ft. #2637 1/0 Cu. Cable 3 pr. #2027 Ferrules, 1 ea. #2103 Screw Ground Rod 1 ea. #2654 Storage Bag	2	54.2 (24.6)
4248	Assembled Ground Cluster Set 1 ea. #1790 Smooth Bronze Duck Bill Cluster 76 ft. #2636 #2 Cu. Cable 3 pr. #2022 Ferrules, 1 ea. #2103 Screw Ground Rod 1 ea. #2654 Storage Bag	1	54.2 (24.6)

Clusters are also available with Mounted Clamps, consult the factory for more information.
Optional ground set label available upon request when ordering.

4 WIRE UNIVERSAL GROUNDING CLUSTERS & SETS

Grounding Clusters are used to make it easy to apply multiple grounding assemblies easy for a single line worker. All clusters have an option of a ground lead by using the extra connection point on each cluster. Four wire clusters are recommended for three phase Wye systems. Complete grounding cluster assemblies are available from the factory. Specify cable size and length required and assembly will be made to your specifications.

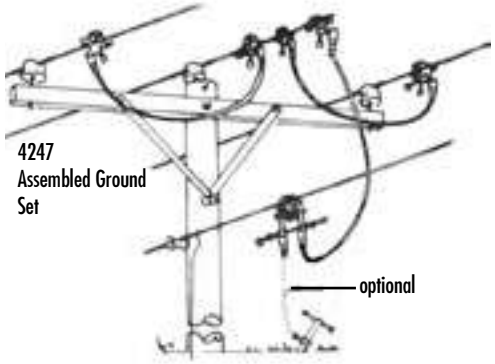

Cat. No.	Description	ASTM Grade	Weight ea. lbs. (kgs)
1794	Cluster w/ 6 #1793 Smooth Jaw 556 KCM Bronze Duck Bill Clamps	4	9 (4.1)
2192	Cluster w/ 6 #1895 Serrated Jaw 1.5" Aluminum "C" Clamps	5	11.8 (5.4)
2536	Cluster w/ 6 #2531 Smooth Jaw 1" Aluminum "C" Clamps	5	8.8 (4)
2604	Cluster w/ 6 #1853 Serrated Jaw 1.66" Aluminum Duck Bill Clamps	5	6.2 (2.8)
2682	Assembled Ground Cluster 1 ea. #1794 Smooth Bronze Duck Bill Cluster 18 ft. #2636 #2 Cu. Cable 3 pr. #2022 Ferrules 1 ea. #2654 Storage Bag	1	14.5 (6.6)
4247	Assembled Ground Cluster 1 ea. #2536 Smooth Aluminum "C" Cluster 18 ft. #2637 1/0 Cu. Cable 3 pr. #2027 Ferrules 1 ea. #2654 Storage Bag	2	18 (8.2)

Clusters are also available with Mounted Clamps, consult the factory for more information.
Optional ground set label available upon request when ordering.

4 WAY CONNECTOR

The **2680 4-way connector** ground set provides an excellent system for the grounding of a 3 phase system.

4-way connectors are used to create a common connection between the conductor leads and the ground lead of a ground set.

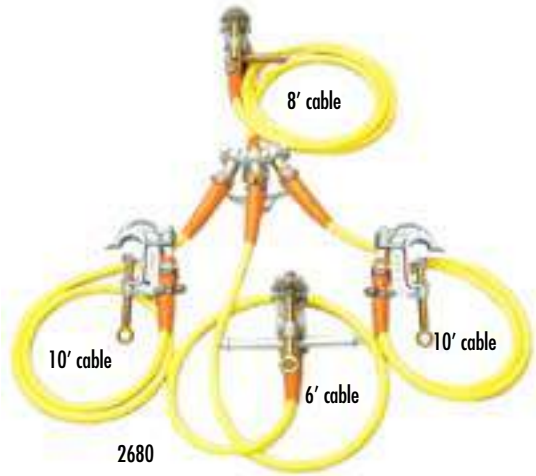

2680

2374

21702

24438

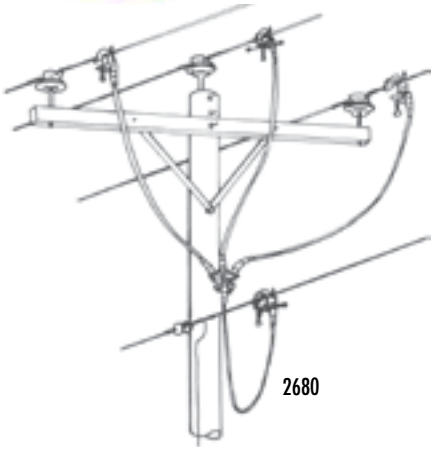
2680

Cat. No.	Description	ASTM Grade	Weight ea. lbs. (kgs)
2680	Four Way Connector Ground Set - Grade 2 21 kA 15 cycles 1 #2374 Four Way Connector w/ Sleeves 4 #1895 1.5" Serrated Jaw Clamps w/ Sleeves 1 #2427 Double Hanger Stud, 1 #2402 Contact Stud 34 ft. #2137 1/0 Cu. Cable 4 pr. #2027 Ferrules	2	28 (12.7)
2374	Threaded Ferrule Four Way Connector	5	1.8 (.8)
21702	Threaded Ferrule Four Way Connector 1 ¾ long x 2 ¼ dia.	5	.5 (.23)
24438	Plain Ferrule Four Way Connector	5	2 (.9)

GROUNDING SETS

FOR SPECIAL APPLICATIONS

Listed are some typical complete personal protection ground sets for common line construction. These sets, although practical for many applications, are shown as a guide to help determine individual system needs and for ease of ordering. Variations of these sets may be requested to meet specific situations or user preferences. Your local Salisbury representative can answer any questions you have on personal protection grounding needs and applications.

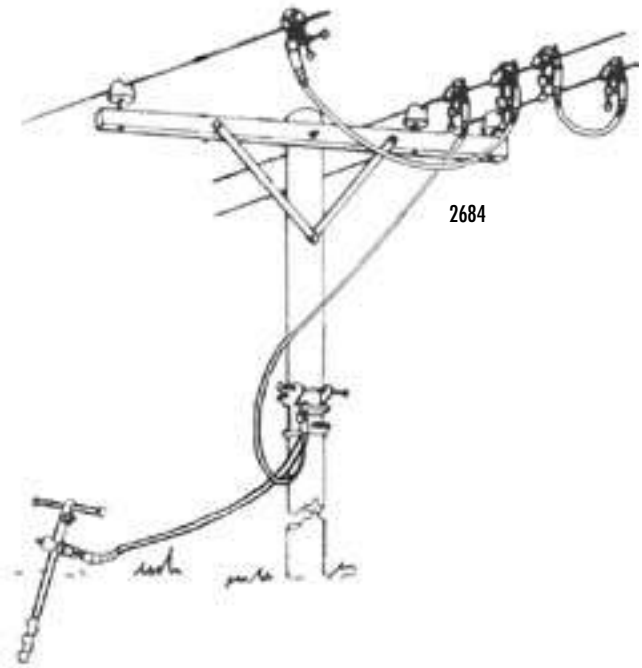

Cat. No.	Description	ASTM Grade	Weight ea. lbs. (kgs)
COMPLETE 3 PHASE DELTA			
2684	2 ea. #20880 Contact Bar 7 ea. #1895 Serrated Aluminum "C" Clamp 1.5" 84 ft. #2637 1/0 Cu. Black Cable, 4 pr. #2027 Ferrules 2 ea. #1928 Hanger Studs, 1 ea. #2654 Storage Bag 1 ea. #2103 Screw Ground Rod	2	63.5 (28.8)
4249	2 ea. #20880 Contact Bar 7 ea. #2531 Smooth Aluminum "C" Clamp 795 KCM 86 ft. #2637 1/0 Cu. Cable, 4 pr. #2027 Ferrules 2 ea. #2537 Hanger Studs, 1 ea. #2654 Storage Bag 1 ea. #2103 Screw Ground Rod	2	63.5 (28.8)
COMPLETE 4 WIRE WYE			
4276	1 ea. #20880A Contact Bar 7 ea. #2531 Smooth Aluminum "C" Clamp 795 KCM 32 ft. #2637 1/0 Cu. Cable, 4 pr. #2027 Ferrules 3 ea. #2537 Hanger Studs, 1 ea. #2654 Storage Bag	2	34 (15.4)

Optional ground set label available upon request when ordering.

DEAD FRONT GROUNDING JUMPERS & ELBOWS

Dead Front Ground Sets are supplied with an insulated grounding elbow, yellow jacketed copper grounding cable, and a 1815 bronze flat jaw ground clamp for the ground connection. **Grounding Elbows** are equipped with arc quenching tips as provided on standard load break elbows.

Both 15kV and 25kV elbows are available with connectors for 1/0 or 2/0 cable. Assembled sets for 15kV and 25kV are available for single phase or three phase grounding requirements. The fault duty rating for 200 amp grounding elbows is 10kA for 10 cycles per IEEE 386. Standard three phase sets have a 4 ft. tail connecting to a 2374 four wire connector with 2 ft. leads for the elbows. Sets can be factory assembled to customer specifications.

22630

Elbow

2962

Cat. No.	Description	Weight ea. lbs. (kgs)
INSULATED GROUNDING ELBOWS		
2910	15kV Elbow w/ 1/0 Cable Connector	1.7 (.7)
2912	15kV Elbow w/ 2/0 Cable Connector	1.7 (.7)
2935	25kV Elbow w/ 1/0 Cable Connector	2 (.9)
2936	25kV Elbow w/ 2/0 Cable Connector	2 (.9)
ASSEMBLED GROUNDING SETS		
2961	15kV Single Phase, 6 ft. 1/0 Cable w/ Bag	10 (4.5)
2962	15kV Single Phase, 6 ft. 1/0 Cable w/o Bag	8 (3.6)
2963	15kV Three Phase, 1/0 Cable w/ Bag	22 (10)
22630	15kV Three Phase, 1/0 Cable w/o Bag	20 (9)
2971	25kV Single Phase, 6 ft. 1/0 Cable w/ Bag	13 (5.9)
22631	25kV Single Phase, 6 ft. 1/0 Cable w/o Bag	11 (5)
2973	25kV Three Phase, 1/0 Cable w/ Bag	24 (10.9)
22632	25kV Three Phase, 1/0 Cable w/o Bag	22 (10)

Optional ground set label available upon request when ordering.

ASTM F855-09 Table 1 - Protective Grounding Clamp Ratings

TABLE 1 Protective Ground Cable, Ferrule, Clamp and Assembly Ratings for Symmetrical Current

Grade	Grounding Clamp Torque Strength, min				Short Circuit Properties[A]							Continuous Current Rating, A RMS, 60 Hz
	Yield[B]		Ultimate		Withstand Rating, Symmetrical kA RMS, 60 Hz			Ultimate Rating Capacity[CD], Symmetrical kA RMS, 60 Hz				
	lbf·in.	n·m	lbf·in.	n·m	15 cycles (250 ms)	30 cycles (500 ms)	Copper Cable Size	15 cycles (250 ms)	30 cycles (500 ms)	60 cycles (1 s)	Maximum Copper Test Cable Size	
1	280	32	330	37	14	10	#2	18	13	9	2/0	200
2	280	32	330	37	21	15	1/0	29	21	14	4/0	250
3	280	32	330	37	27	20	2/0	37	26	18	4/0	300
4	330	37	400	45	34	25	3/0	47	33	23	250 kcmil	350
5	330	37	400	45	43	30	4/0	59	42	29	250 kcmil	400
6	330	37	400	45	54	39	250 kcmil or 2 2/0	70	49	35	350 kcmil	450
7	330	37	400	45	74	54	350 kcmil or 2 4/0	98	69	48	550 kcmil	550

[A] Withstand and ultimate short circuit properties are based on performance with surges not exceeding 20 % asymmetry factor (see 9.1 and 12.3.4.2).
[B] Yield shall mean no permanent deformation such that the clamp cannot be reused throughout its entire range of application.
[C] Ultimate rating represents a symmetrical current which the assembly or individual components shall carry for the specified time.
[D] Ultimate values are based upon application of Onderdonk's equation to 98 % of nominal circular mil area allowed by Specifications B 172 and B 173.

Reprinted, with permission, from ASTM F 855-09 Standard Specification for Temporary Protective Grounds to Be Used on De-energized Electric Power Lines and Equipment Table 1, copyright ASTM International, 100 Barr Harbor Drive, West Conshohocken, PA 19428. A copy of the complete standard may be obtained from ASTM, www.astm.org

ASTM F855-09 Table 2 - Grounding Cable Ferrule and Assembly Ratings

TABLE 2 Ultimate Assembly Rating for High *X/R* Ratio Applications

Grade	Size	High Asymmetrical Test Requirements			
		Rating Rated Current (kA)	*X/R* = 30 1st Cycle Current Peak (kA) X 2.69	Last Cycle Current Peak (kA)	Test Duration (cycles)
1H	No. 2	15	41	23	15
2H	1/0	25	65	37	15
3H	2/0	31	84	46	15
4H	3/0	39	105	58	15
5H	4/0	47	126	70	15
6H	250 MCM	55	148	82	15
7H	350 MCM	68	183	101	15

NOTE 1—The above current values are based on electromechanical test values.
NOTE 2—Assemblies that have been subjected to these shall not be re-used.
NOTE 3—For use with currents exceeding 20 % asymmetry factor.
NOTE 4—See X4.7.2 for additional information.
NOTE 5—Alternate testing circuits are available for laboratories that cannot achieve the above requirements. See Appendix X4 for details.

Reprinted, with permission, from ASTM F 855-09 Standard Specification for Temporary Protective Grounds to Be Used on De-energized Electric Power Lines and Equipment Table 2, copyright ASTM International, 100 Barr Harbor Drive, West Conshohocken, PA 19428. A copy of the complete standard may be obtained from ASTM, www.astm.org

safety line

TEMPORARY PROTECTIVE GROUNDING EQUIPMENT

safety line

TEMPORARY PROTECTIVE GROUNDING EQUIPMENT

NOTE:

Salisbury by Honeywell's Safety Line grounding equipment offers solutions for all applications. This line of temporaty protective grounding equipment offers a wide variety of products to meet many individual needs. These products are available in complete assemblies or individual components.

PLEASE NOTE: When ordeing assemblies of grounding products, please make sure all items included in the assembly are only from the product line found within this section. Including items from other grounding equipment sections of this book will add additional shipping time.

Grounding Configurator™

The Grounding Configurator™ makes ordering grounding equipment simple and easy. This interactive web tool allows you to easily build the proper temporary grounding equipment for your specific needs. The step-by-step process takes out the guess work, and makes it easy to change components until the most appropriate ground set is developed.

Just go to our web site and give it a try. You will be prompted from start to finish. All you need to know is the maximum fault current, its duration and the size of cable required on the fault, and the configurator will do the rest. No more second guessing quantities or parts to be sure that you have put together a ground set that will function just as you expect. When you finish, enter your personal information and the configurator will instantly provide you with the bill of materials including part numbers. All that's left to do is to place the order!

Visit **salisburybyhoneywell.com** to use the exclusive Grounding Configurator™.

How to specify temporary protective grounding assemblies.

A grounding assembly in its basic form consists of two clamps, one pair of ferrules and a length of cable.

The clamps can be identical to each other or quite different depending on each grounding application. Because of this, ground clamps are sold individually, not in pairs. Salisbury offers a wide variety of clamps including C-clamps, flat jaw clamps, socket clamps, duck bill clamps and specialty clamps for unique situations. Clamps are offered in either bronze or aluminum alloys and are manufactured to meet the current specifications of ASTM F 855.

To attach a clamp to the grounding cable requires the use of a ferrule. Ferrules are compressed on the strands of the cable to provide a low resistance permanent connection. The size of the ferrule is determined by the size of the cable. Ferrules are available in aluminum, copper and tin plated copper, shrouded and non-shrouded. Plated copper ferrules can be used with either aluminum or bronze clamps. Two ferrules are required for each assembly therefore they are sold in pairs. Ferrules are manufactured to the specifications of ASTM F 855.

The final component that makes up a ground set is the grounding cable itself. The size of the cable is dependent on the short circuit current capacity of the system being grounded. Once this is determined, only the length of the cable and the color of the jacket need to be specified to complete the assembly.

Ground Set Checklist

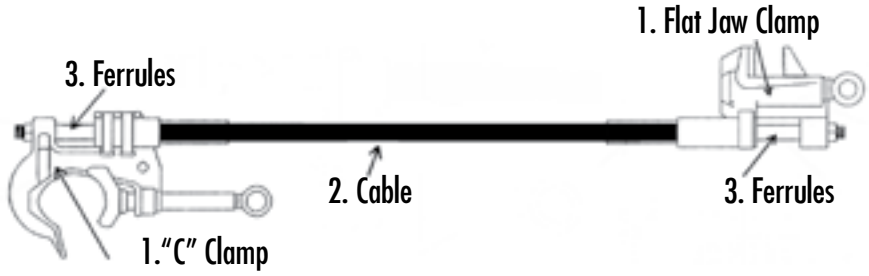

1. Specify the clamps. Two are required for a complete assembly. The maximum amperage of the clamp is designated by the ASTM grade of each clamp. Be sure that the clamp will meet or exceed the maximum amperage rating of the ground cable that it will be used with.

2. Specify the cable. Once the short circuit capacity of the system has been determined, choose the appropriate size cable. Specify the cable length, and the color of the jacket desired.

3. Specify the ferrules. One pair of ferrules is required per assembly. The size of the ferrule must match the size of the cable that it will be used with. Make sure to specify whether the ferrule should be copper or aluminum and threaded or plain.

4. Specify the options. List any optional equipment that is desired. This can include hanger studs, contact studs, heat shrink tubing, markings, clear strain relief, etc.

Options also include a ground set label. These optional labels include the date of manufacture and are available upon request when ordering.

Additional Screw Options Available Where Designated

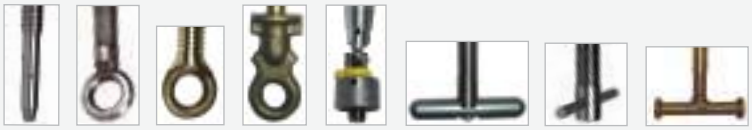

B	E	EB	PG	QC	RT	T	TB
Bayonet	Stainless Steel Eye	Bronze Eye	Posigrip	Quick Change	Removable T-Handle	Stainless Steel T-Handle	Bronze T-Handle

Bayonet Ferrule

Installs/removes ground heads equipped with bayonet studs.

98B Quick Change 1 lbs. (0.45 kgs)

Add suffix "U" for Universal, "Q" for Quick Change

DUCK BILL GROUNDING CLAMPS

1.13", AND 1.63" SIZES

Strain Relief System

767E

767PSE

768E

Open Duck Bill Clamp: Includes springs that keep jaw open for easy application.

760SRS6E

ALUMINUM

Cat. No.	Eye & Clamp Description	ASTM Grade / Class	Main Line Range	Continuous Current Rating	Weight ea. lbs. (kgs)
1.13" SMOOTH JAW ALUMINUM DUCK BILL CLAMPS - Threaded - w/o strain relief system					
767E	Eye, Stainless Steel	3 / A	795 KCM ACSR		1.4 (0.63)
			to #6	300 RMS Amps	
768E	Eye, Stainless Steel	Smooth Jaw	.19" - 1.13"	60Hz	1.4 (0.63)
	Open Clamp		4.8mm - 28.7mm		
1.63" SMOOTH JAW ALUMINUM DUCK BILL CLAMPS - Threaded					
767PSE	Eye, Stainless Steel	3 / A		300 RMS Amps	1.6 (0.73)
	w/ AL Parking Stand	Smooth Jaw		60Hz	
760006E	Eye, Stainless Steel				3.0 (1.36)
		5 / A	954 KCM ACSR		
760SR6E	Eye, Stainless Steel		to #6	400 RMS Amps	2.2 (1.00)
	w/ strain relief system	Smooth Jaw			
760SR6PSE	Eye, Stainless Steel		.19" - 1.63"	60Hz	1.6 (0.73)
	w/ AL parking stand &		4.8mm - 41mm		
	w/ strain relief system				
7600S6E	Eye, Stainless Steel				3.0 (1.36)
		5 / B			
760SRS6E	Eye, Stainless Steel	Serrated			2.2 (1.00)
	w/ strain relief system				
1.63" SMOOTH JAW ALUMINUM DUCK BILL CLAMPS - Pin - w/o strain relief system					
761E	Eye, Stainless Steel	3 / A	954 KCM ACSR to #6	300 RMS Amps	1.4 (0.63)
	w/ AL Parking Stand	Smooth	.19" - 1.63" 4.8mm - 41mm	60Hz	

Additional screw options available. See page 3 or contact your local Salisbury Representative for more information.

"C" TYPE GROUNDING CLAMPS

.75" SIZES

7640001EB

7640CMS1E

	Cat. No.	Eye & Clamp Description	ASTM Grade / Class	Main Line Range	Continuous Current Rating	Weight ea. lbs. (kgs)
ALUMINUM	**0.75" ALUMINUM "C" CLAMP - Threaded - w/o strain relief system**					
	7640001E	Eye, Stainless Steel	5 / A	2 ∅ KCM ACSR		1.0 (0.45)
	7640001EB	Eye, Bronze	Smooth Jaw	to #6	400 RMS Amps	1.0 (0.45)
	76400S1E	Eye, Stainless Steel	5 / B	.19" - .75"	60Hz	1.0 (0.45)
	76400S1EB	Eye, Bronze	Serrated Jaw	4.8mm - 19mm		1.0 (0.45)
BRONZE	**0.75" BRONZE "C" CLAMP - Threaded - w/o strain relief system**					
	7640CM1E	Eye, Stainless Steel	5 / A Smooth Jaw	2 ∅ KCM ACSR to #6	400 RMS Amps	3.0 (1.40)
	7640CMS1E	Eye, Stainless Steel	5 / B Smooth Jaw	.19" - .75" 4.8mm - 19mm	60Hz	3.0 (1.40)

Additional screw options available. See page 3 or contact your local Salisbury Representative for more information.

"C" TYPE GROUNDING CLAMPS

1.25" AND 1.5" SIZES

760001E

760CM1E

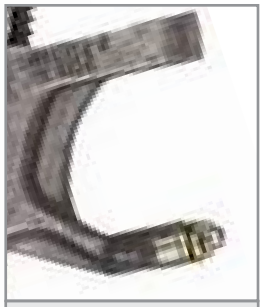

Strain Relief System

	Cat. No.	Eye & Clamp Description	ASTM Grade / Class	Main Line Range	Continuous Current Rating	Weight ea. lbs. (kgs)
ALUMINUM	**1.25" ALUMINUM "C" CLAMPS - Threaded - w/o strain relief system**					
	760001E	Eye, Stainless Steel				1.0 (0.45)
	760001EB	Eye, Bronze				1.0 (0.45)
	760001RT	Removable T				1.0 (0.45)
		Stainless Steel	5 / A	900 KCM ACSR		
	760001T	T-Handle	Smooth Jaw	to #6		1.0 (0.45)
		Stainless Steel			400 RMS Amps	
	760001PSE	Eye, Stainless Steel		.19" - 1.25"	60Hz	1.3 (0.59)
		w/ Parking Stand		4.8mm - 31.8mm		
	760001CS	Eye, Stainless Steel				1.3 (0.59)
		w/ steel parking stand				
	7600S1PSE	Eye, Stainless Steel	5 / B			1.3 (0.59)
		w/ Parking Stand	Serrated Jaw			
	7600S1EB	Eye, Bronze				1.0 (0.45)
	1.5" ALUMINUM "C" CLAMPS - Threaded					
	760SR1EB	Eye, Bronze		1035.5 KCM ACSR		1.6 (0.75)
		w/ strain relief system	5 / A	to #6	400 RMS Amps	
	760SRS1E	Eye, Stainless Steel	Smooth Jaw	.19" - 1.5"	60Hz	5.0 (2.27)
		w/ strain relief system		4.8mm - 38mm		
BRONZE	**1.25" BRONZE "C" CLAMPS - Threaded - w/o strain relief system**					
	760CM1E	Eye, Stainless Steel	5 / A Smooth Jaw	900 KCM ACSR to #6	400 RMS Amps	3.3 (1.50)
	760MS1E	Eye, Stainless Steel	5 / B Serrated Jaw	.19" - 1.25" 4.8-31.8mm	60Hz	3.3 (1.50)

Additional screw options available. See page 3 or contact your local Salisbury Representative for more information.

"C" TYPE GROUNDING CLAMPS

2.13" - 2.5" SIZE

ALUMINUM

Cat. No.	Eye & Clamp Description	ASTM Grade / Class	Main Line Range	Continuous Current Rating	Weight ea. lbs. (kgs)
2.13" ALUMINUM "C" CLAMP - Threaded - w/o strain relief system					
7660001E	Eye, Stainless Steel	5 / A Smooth Jaw	3000 KCM ACSR to #6	400 RMS Amps 60Hz	2.0 (0.91)
76600S1E	Eye, Stainless Steel	5 / B Serrated Jaw	0.25" - 2.13" 6.4mm - 54mm		2.0 (0.91)
76600S1PG	Posigrip, Stainless Steel				2.0 (0.91)
2.5" ALUMINUM "C" CLAMP - Threaded - w/o strain relief system					
7512B	Bayonet, Stainless Steel	5 / A Smooth Jaw	2.0" I.P.S. to #6	400 RMS Amps 60Hz	4.0 (1.82)
7512Q	Quick Change, Stainless Steel		0.5" - 2.5" 12.7mm - 63.5mm		4.0 (1.82)
7512E	Eye, Stainless Steel				4.0 (1.82)

Additional screw options available. See page 3 or contact your local Salisbury Representative for more information.

BUS BAR AND BUS BAR ALLIGATOR CLAMPS

7575FTE

7542B

7541T

BRONZE

Cat. No.	Eye & Clamp Description	ASTM Grade / Class	Main Line Range	Continuous Current Rating	Weight ea. lbs. (kgs)
0.5" BRONZE BUS BAR ALLIGATOR CLAMPS - Threaded - w/o strain relief system					
7575FE	Eye, Stainless Steel				2.0 (0.91)
7575FEST	Eye-T, Stainless Steel				2.0 (0.91)
7575FGA	Grip-All, Stainless Steel	2 / A	0.234" - 0.5"	250 RMS Amps	2.0 (0.91)
7575FPSE	Eye, Stainless Steel	Smooth Jaw	6mm - 12.7mm	60 Hz	2.0 (0.91)
	w/ Parking Stand				
0.5" BRONZE BUS BAR ALLIGATOR CLAMPS with TEETH - Threaded - w/o strain relief system					
7575FTE	Eye, Stainless Steel	2 / B		250 RMS Amps	2.0 (0.91)
7575FTGA	Grip-All, Stainless Steel	Serrated Jaw	0.234"-0.5" 6-12.7mm	60 Hz	2.0 (0.91)

Additional screw options available. See page 3 or contact your local Salisbury Representative for more information.

ALUMINUM

Cat. No.	Eye & Clamp Description	ASTM Grade / Class	Main Line Range	Continuous Current Rating	Weight ea. lbs. (kgs)
4.4" ALUMINUM BUS BAR CLAMPS - Threaded - w/o strain relief system					
7541E	Eye, Stainless Steel	5 / B	0.31" - 4.25"	400 RMS Amps	2.0 (0.91)
7541T	T-Handle, Stainless Steel	Serrated Jaw	7.9mm - 112mm	60Hz	2.0 (0.91)
4.4" ALUMINUM BUS BAR CLAMPS - Pin - w/o strain relief system					
7542B	Bayonet, Stainless Steel	5 / B	0.31" - 4.25"	400 RMS Amps	2.0 (0.91)
		Serrated Jaw	7.9mm - 112mm	60Hz	

Additional screw options available. See page 3 or contact your local Salisbury Representative for more information.

LARGE SUBSTATION BUS CLAMPS

7310E

R101DE

73065E

ALUMINUM

Cat. No.	Eye & Clamp Description	ASTM Grade / Class	Main Line Range	Continuous Current Rating	Weight ea. lbs. (kgs)
4.5" ALUMINUM SUBSTATION BUS CLAMPS - Threaded - w/o strain relief system					
7311E	Eye, Stainless Steel	5 / A Smooth Jaw	0.5" - 4.5" 12.7mm - 114mm	400 RMS Amps 60Hz	4.0 (1.82)
6" ALUMINUM SUBSTATION BUS CLAMPS - Threaded - w/o strain relief system					
R101DE	Eye, Stainless Steel	5 / B Serrated Jaw	1 ∅ I.P.S. 0.5" - 6" 12.7mm - 152mm	400 RMS Amps 60Hz	4.0 (1.82)
7" ALUMINUM SUBSTATION BUS CLAMPS - Threaded - w/o strain relief system					
73065E	Eye, Stainless Steel	5 / B Smooth Jaw	0.4" - 7" 10.2mm - 178mm	400 RMS Amps 60Hz	6.7 (3.00)
4.5" ALUMINUM SUBSTATION BUS CLAMPS - Pin - w/o strain relief system					
7310E	Eye, Stainless Steel	5 / A Smooth Jaw	1/2" I.P.S. 0.5"-4.5" 12.7-114mm	400 RMS Amps 60Hz	4.0 (1.82)

Additional screw options available. See page 3 or contact your local Salisbury Representative for more information.

GROUNDING CLAMPS FOR FLATS & ANGLES

760CM3E

73025T

	Cat. No.	Eye & Clamp Description	ASTM Grade / Class	Main Line Range	Continuous Current Rating	Weight ea. lbs. (kgs)
ALUMINUM	**1.4" ALUMINUM FLAT FACE CLAMPS - Pin - w/o strain relief system**					
	760002E	Eye, Stainless Steel	5 / B		400 RMS Amps	1.0 (0.45)
	760002EB	Eye, Bronze	Serrated Jaw	0.19" - 1.4"	60Hz	1.0 (0.45)
	760002T	T-Handle, Stainless Steel		4.8mm - 35.6mm		1.0 (0.45)
ALUMINUM	**1.4" ALUMINUM FLAT FACE CLAMPS - Threaded**					
	760SR3E	Eye, Stainless Steel	5 / B	0.19" - 1.4"	400 RMS Amps	1.5 (0.68)
		w/ strain relief system	Serrated Jaw	4.8mm - 35.6mm	60Hz	
BRONZE	**1.4" BRONZE FLAT FACE CLAMPS - Threaded**					
	760CMSR3E	Eye, Stainless Steel	5 / B	0.19" - 1.4"	400 RMS Amps	4.5 (2.0)
		w/ strain relief system	Serrated Jaw	4.8mm - 35.6mm	60Hz	
ALUMINUM	**1.5" ALUMINUM FLAT FACE CLAMPS - Threaded - w/o strain relief system**					
	760003B	Bayonet, Stainless Steel	5 / B		400 RMS Amps	1.2 (0.54)
	760003E	Eye, Stainless Steel	Serrated Jaw	0.19" - 1.5"	60Hz	1.2 (0.54)
	760003EB	Eye, Stainless Steel		4.8mm - 38mm		1.2 (0.54)
BRONZE	**1.5" BRONZE FLAT FACE CLAMPS - Threaded - w/o strain relief system**					
	760CM3T	T-Handle, Stainless Steel	5 / B	0.19" - 1.5"	400 RMS Amps	3.2 (1.40)
			Serrated Jaw	4.8mm - 38mm	60Hz	

Additional screw options available. See page 3 or contact your local Salisbury Representative for more information.

ALUMINUM

Cat. No.	Eye & Clamp Description	ASTM Grade / Class	Main Line Range	Continuous Current Rating	Weight ea. lbs. (kgs)
2.5" ALUMINUM ALL ANGLE CLAMPS - Threaded - w/o strain relief system					
7315E	Eye, Stainless Steel	5 / B	2" I.P.S. to #4	400 RMS Amps	4.3 (2.00)
7315B	Bayonet, Stainless Steel	Serrated Jaw	0.25" - 2.5"	60Hz	4.3 (2.00)
7315PG	Posigrip, Bronze		6.4mm - 57mm		4.3 (2.00)
2.5" ALUMINUM TOWER ANGLE CLAMPS - Threaded - w/o strain relief system					
73025T	T-Handle, Stainless Steel	5 / A Smooth Jaw	0.3" - 1.6" 8-41mm	400 RMS Amps 60Hz	2.5 (1.14)
4" ALUMINUM TOWER ANGLE CLAMPS - Threaded - w/o strain relief system					
7304T	T-Handle, Stainless Steel	5 / A Smooth Jaw	0.25" - 0.94" 6-24mm	400 RMS Amps 60Hz	3.3 (1.50)
4" ALUMINUM TOWER ANGLE CLAMPS - Pin + Threaded - w/o strain relief system					
7314T	T-Handle, Stainless Steel	5 / A	0.25" - 0.94" 6-24mm	400 RMS Amps	3.3 (1.50)
7320SB	Bayonet, Stainless Steel	Smooth Jaw	0.4" - 2.5" 10-64mm	60Hz	5.0 (2.27)
4" ALUMINUM TOWER ANGLE CLAMP - Pin - with Spike Point, No Ground Lead					
7320PGA	Grip-All, Stainless Steel	5 / A Smooth Jaw	0.25" - 0.94" 6-24mm	400 RMS Amps 60Hz	3.3 (1.50)
4" AL. TOWER ANGLE CLAMPS with Copper Parking Stand - Rated for 49kA for 15 cycles w/ X/R=25					
7316E	Eye, Stainless Steel	Exceeds Grade 5 Smooth Jaw - Inside Angle Clamp 4" max.			-
7304DE	Eye, Stainless Steel	Exceeds Grade 5 Smooth Jaw - Outside Angle Clamp 4" max.			-

Additional screw options available. See page 3 or contact your local Salisbury Representative for more information.

Cutout Clamps are applied with a clampstick into the bottom hinge contact of a cutout. This clamp can be used as part of a ground assembly or by using a contact stud using a standard grounding assembly with "C" clamps from the stud to ground.

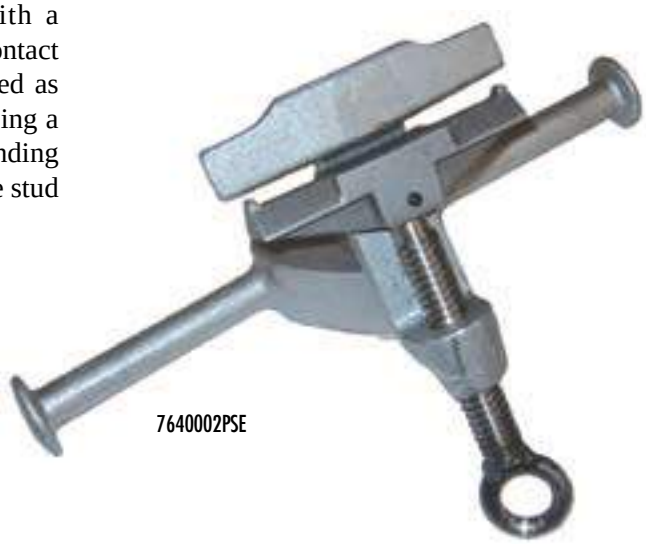

7640002PSE

	Cat. No.	Eye & Clamp Description	ASTM Grade / Class	Main Line Range	Continuous Current Rating	Weight ea. lbs. (kgs)
ALUMINUM	**1.63" ALUMINUM CUTOUT CLAMPS - Threaded - w/o strain relief sleeve**					
	7640002E	Eye, Stainless Steel	3 / A Smooth Jaw	0.188" - 1.63"	300 RMS Amps 60Hz	1.0 (0.45)
	7640002EB	Eye, Bronze				1.0 (0.45)
	7640002PSE	Eye, Stainless Steel				1.2 (0.5)
		w/ Al. Dbl. Parking Stand				
	7640002PSEB	Eye, Bronze				1.2 (0.5)
		w/ Al. Dbl. Parking Stand				
BRONZE	**1.63" BRONZE CUTOUT CLAMPS - Threaded - w/o strain relief sleeve**					
	7640CM2T	T-Handle, Stainless Steel	3 / A Smooth Jaw	0.188" - 1.63"	300 RMS Amps 60Hz	2.0 (0.91)

Additional screw options available. See page 3 or contact your local Salisbury Representative for more information.

The **Running Power Rail Ground Set** is made up of 7561A power rail clamp and 7560 running rail clamp connected with three feet (91.4 cm) of 4/0 PVC-jacketed copper cable. Set includes one 10024BC, 1" x 24" (2.5 x 61 cm) fiberglass handle with bayonet to operate the power rail clamp.

7561A

7560

7561

78000

ALUMINUM

Cat. No.	Eye & Clamp Description	ASTM Grade / Class	Main Line Range	Continuous Current Rating	Weight ea. lbs. (kgs)
5.75" ALUMINUM RUNNING RAIL CLAMP - Pin					
7560	Toggle Handle, Stainless Steel	5 / B Smooth Jaw	5" - 5.75"	400 RMS Amps 60Hz	5.0 (2.27)
4" ALUMINUM POWER RAIL CLAMP - Pin					
7561A	Bayonet, SS	5 / B Smooth Jaw	0" - 4"	400 RMS Amps 60Hz	7.0 (3.17)
4" ALUMINUM POWER RAIL CLAMP - Threaded					
7561B	Bayonet, SS	5 / B Smooth Jaw	0" - 4"	400 RMS Amps 60Hz	7.0 (3.17)
TRAVELING GROUND					
7561	Running Power Rail Ground Set	Grade 5			15 (6.80)
1.63" ALUMINUM TRAVELING GROUND CLAMPS - Pin/Threaded					
78000	Eye, Stainless Steel w/ Contact Stud	3 / A Smooth Jaw	0.125" - 1.63"	300 RMS Amps 60Hz	10 (4.54)

Additional screw options available. See page 3 or contact your local Salisbury Representative for more information.

BALL & SOCKET SYSTEM

SOCKET CLAMP

The **Ball and Socket Grounding System** has a lightweight compact design and allows for variable angle accessibility. These clamps are made from bronze alloy and have a socket size of 1" (25.4mm) with a threaded bore boss of 5/8"-11 UNC. There are fixed grounding points on the socket clamp.

See page J-3 for ball socket studs and accessories available.

Cat. No.	Description	ASTM Grade	Continuous Current Rating	Weight ea. lbs. (kgs)
7542CM1B	Smooth Jaw, Threaded w/ Bayonet, SS	5	400	1.5 (.68)
7542CM1E	Smooth Jaw, Threaded w/ Eye, SS	5	400	1.5 (.68)
7542CM1PG	Smooth Jaw, Threaded w/ Posigrip, BR	5	400	1.5 (.68)
7542CM1T	Smooth Jaw, Threaded w/ T-Handle, SS	5	400	1.5 (.68)
7542CM2E	Smooth Jaw, Pin w/ Eye, SS	5	400	1.9 (.86)

Additional screw options available. See page 3 or contact your local Salisbury Representative for more information.

Grounding Cables are made with extra flexible strand of soft drawn #30 AWG (.01") copper and are available in three different jackets.

The transparent flexible thermoplastic (PVC) jacketed cable allows easy inspection for strand breakage. The flexibility decreases with low temperatures. The service temperature ranges from 140º to -40ºF per ASTM F 855, Type III requirements.

The yellow thermoplastic elastomer jacketed cable is the standard for grounding service. It provides a combination of economy, flexibility, and durability. The service temperature ranges from 200º to -50ºF per ASTM F 855, Type I requirements.

The black thermoplastic elastomer jacketed cable has a smaller diameter and thinner jacket material giving it better flexibility than the yellow cable. The service temperature ranges from 200º to -50ºF per ASTM F 855, Type I requirements.

	Cat. No.	Conductor Size	Conductor Typ. O.D.	Jacket Typ. O.D.	ASTM F855 Grade	Fault Duty 15 Cycles	Wt. / ft. lbs. (kgs)
CLEAR PVC	73310XF	#10	.11"	.25"	n/a	n/a	0.06 (0.09)
	7336XF	#6	.21"	.37"	n/a	3.5	0.13 (0.19)
	7340XF	#2	.33"	.50"	1	14.0	0.29 (0.43)
	7341XF	1/0	.45"	.64"	2	21.0	0.52 (0.77)
	7342XF	2/0	.47"	.66"	3	27.0	0.54 (0.80)
	7343XF	4/0	.63"	.84"	5	43.0	0.84 (1.25)
YELLOW	7340XFY	#2	.33"	.50"	1	14.0	0.29 (0.43)
	7341XFY	1/0	.45"	.64"	2	21.0	0.52 (0.77)
	7342XFY	2/0	.47"	.66"	3	27.0	0.54 (0.80)
	7343XFY	4/0	.63"	.84"	5	43.0	0.84 (1.25)
BLACK	7340XFB	#2	.33"	.50"	1	14.0	0.29 (0.43)
	7341XFB	1/0	.45"	.64"	2	21.0	0.52 (0.77)
	7342XFB	2/0	.47"	.66"	3	27.0	0.54 (0.80)
	7333XFB	3/0	.55"	.72"	4	36.0	0.68 (0.30)
	7343XFB	4/0	.62"	.78"	5	43.0	0.77 (0.35)

THREADED & PIN FERRULES FOR SAFETY LINE SETS

For **Threaded Ferrules** (Terminals) the recommended torque applied during installation of jam nut for threaded ferrules is 20 ft.-lb. These threaded ferrules include one brass jam nut and one lock washer. For **Pin Terminals** the recommended torque applied during installation of pin ferrule eye bolts is 28 ft.-lb.

COPPER

Cat. No.	Conductor Size	Style	Stud Size	Body Die Codes	Shroud Die Codes	Length Stripped inches
SHROUDED						
760001CT40*	#2	Threaded	5/8-11	U27RT	U27ART	1-5/8
7600011CT41*	1/0	Threaded	5/8-11	T&B 66	B75-AH	1-15/16
7600011CT42*	2/0	Threaded	5/8-11	T&B 66	B75-AH	2
76CT43*	4/0	Threaded	5/8-11	T&B 66	B75-AH	2
760001PT40*	#2	Pin	11/16	U27RT	U27ART	1-5/8
7600011PT41*	1/0	Pin	11/16	T&B 66	B75-AH	1-15/16
7600011PT42*	2/0	Pin	11/16	T&B 66	B75-AH	2
76PT43*	4/0	Pin	11/16	T&B 66	B75-AH	2
UNSHROUDED						
98132022*	#2	Threaded	5/8-11	U243	-	1-5/16
98132023*	1/0	Threaded	5/8-11	U243	-	1-5/16
98132024*	2/0	Threaded	5/8-11	T&B 60	-	1-5/16
98132025*	4/0	Threaded	5/8-11	T&B 62	-	1-5/16
98132022P*	#2	Pin	11/16	U243	-	1-5/16
98132023P*	1/0	Pin	11/16	U243	-	1-5/16
98132024P*	2/0	Pin	11/16	T&B 60	-	1-5/16
98132025P*	4/0	Pin	11/16	T&B 62	-	1-5/16

Add suffix "T" to the catalog number when requesting tin-plated copper.

ALUMINUM

SHROUDED						
760001AT40*	#2	Threaded	5/8-11	U27RT	U27ART	1-5/8
7600011AT41*	1/0	Threaded	5/8-11	T&B 66	B75-AH	1-15/16
7600011AT42*	2/0	Threaded	5/8-11	T&B 66	B75-AH	2
76AT43*	4/0	Threaded	5/8-11	T&B 66	B75-AH	2
760001PA40*	#2	Pin	11/16	U27RT	U27ART	1-5/8
7600011PA41*	1/0	Pin	11/16	T&B 66	B75-AH	1-15/16
7600011PA42*	2/0	Pin	11/16	T&B 66	B75-AH	2
76PA43*	4/0	Pin	11/16	T&B 66	B75-AH	2
UNSHROUDED						
98132A22*	#2	Threaded	5/8-11	U243	-	1-5/16
98132A23*	1/0	Threaded	5/8-11	U243	-	1-5/16
98132A24*	2/0	Threaded	5/8-11	T&B 60	-	1-5/16
98132A25*	4/0	Threaded	5/8-11	T&B 62	-	1-5/16
98132A22P*	#2	Pin	11/16	U243	-	1-5/16
98132A23P*	1/0	Pin	11/16	U243	-	1-5/16
98132A24P*	2/0	Pin	11/16	T&B 60	-	1-5/16
98132A25P*	4/0	Pin	11/16	T&B 62	-	1-5/16

SINGLE POINT DISTRIBUTION GROUNDING SET

Sets for Grounded "Y" Systems provide all the equipment required to safely ground a variety of structures on a grounded "Y" distribution systems. Factory assembled kits are for conductors ranging from #6 to 1-1/2" (3.8 cm) diameter, with serrated jaw "C" clamps with threaded terminals. All clamps are supplied with eye screws for installation with clampstick (not included). Other lengths and configurations are available.

Standard Equipotential Grounding Sets provide all the equipment required to safely ground a variety of structures on delta distribution systems. Factory assembled kits are for conductors ranging from #6 to 1-1/2" (3.8 cm) diameter, with smooth or serrated jaw clamps with threaded terminals. All clamps are supplied with eye screws for installation with grip-all clampsticks (not included). Other lengths and configurations are available.

Cat. No.	Cable Size	Fault Duty 15 Cycles	ASTM Grade	Weight ea. lbs. (kgs)
GROUNDED "Y" SYSTEMS				
763S011	2/0	27 kA	3	69 (31.3)
763S45	4/0	43kA	5	110 (49.9)
	Complete Grounded "Y" Set Includes 3 - 6' (1.83 m) Line Jumpers 1 - 12' (3.66 m) Line to Ground Jumper 1 - 60' (18.3 m) Ground Lead 1 - Pole Band 1 - Pole Band Extension 1 - Flat Face Clamp (760003E) 1 - Protective Bag			
EQUIPOTENTIAL DELTA				
7600011	2/0	27 kA	3	62 (28.1)
760045	4/0	43 kA	5	100 (45.4)
	Complete Delta Set Includes 2 - 6' (1.83 m) Line Jumpers 1 - 12' (3.66 m) Line to Ground Jumper 1 - 60' (18.3 m) Ground Lead 1 - Pole Band 1 - Pole Band Extension 1 - Flat Face Clamp (760003E) 1 - Protective Bag			

Optional ground set label available upon request when ordering.

BALL SOCKET 4-WAY CONNECTER SETS

Ball Socket 4-Way Connecter Sets are designed for variable angle accessibility, three-phase grounding. It is supplied with three-foot leads and six feet of cable from a common connection to ground. Upper heads are ball socket clamps (7542CM1E). Lower ground head is standard "C" type ground head (760001E) with a range of #6 to 1-1/4" (32 mm). Ball studs needed but not included.

Cat. No.	Cable Size	Fault Duty 15 Cycles	ASTM Grade	Weight ea. lbs. (kgs)
75420010236	#2	14.5 kA	1	9 (4.08)
75420011036	1/0	21 kA	2	12 (5.44)
75420012036	2/0	27 kA	3	14 (6.35)

Optional ground set label available upon request when ordering.

QUICK GRIP GROUND CLAMPS & GROUNDING SETS

Quick Grip Clamps are specifically designed and ideally suited for temporary grounding where spacing and orientation of components limit the use of traditional ground clamps. The Quick Grip Ground Clamp is available with a Grip-All eye or a Bayonet fitting for installation with a live line tool.

- Available in both the traditional style (VG0l) and a hot stick operated version (VG01GA and VG01B).
- Available in a single lead ground jumper or grounding set with 1, 3 or 4 leads for grounding of single or three-phase secondary terminals.
- Fitted with a copper overlay, riveted to the stationary jaw, connected to a grounding jumper with one hole NEMA connector to assure a low resistance connection.
- The grounding set connection is made using standard copper compression connectors and all connections are covered with a heat-shrink tube to reduce fatigue at stress points.
- The locking jaw pliers are equally suited for flat or rounded terminals.

Optional flat jaw available.

Cat. No. Standard	Cat. No. Flat Jaw	Description	Cable Length ft. (m)	ASTM Grade	Weight lbs. (kgs)
QUICK GRIP GROUND CLAMPS & GROUNDING SETS, Clamp Opening: Min. 0.125" - Max. 1.5"					
VG01	**VGF01**	Locking Pliers, Cu Overlay	N/A	3	1.5 (0.68)
VG01B	**VGF01B**	Locking Pliers, Cu Overlay. Bayonet	N/A	3	1.6 (0.73)
VG01GA	**VGF01GA**	Locking Pliers, Cu Overlay. Grip-All	N/A	3	1.6 (0.73)
VG01013	**VGF01013**	Single Lead, 1/0 x 3' with VG01	3 (0.914)	3	3.6 (1.63)
VG01033	**VGF01033**	Grounding Set, 3 Leads, 1/0 x 3' with VG01	9 (2.743)	3	10.5 (4.77)
VG01034	**VGF01034**	Grounding Set, 4 Leads, 1/0 x 3' with VG01	12 (3.657)	3	13.2 (5.99)
VG11013	**VGF11013**	Single Lead, 1/0 x 3' with VG01GA	3 (0.914)	3	3.7 (1.68)
VG11013B	**VGF11013B**	Single Lead, 1/0 x 3' with VG01GB	3 (0.914)	3	3.7 (1.68)
VG11033	**VGF11033**	Grounding Set, 3 Leads, 1/0 x 3' with VG01GA	9 (2.743)	3	10.8 (4.9)
VG11033B	**VGF11033B**	Grounding Set, 3 Leads, 1/0 x 3' with VG01GB	9 (2.743)	3	10.8 (4.9)
VG11034	**VGF11034**	Grounding Set, 4 Leads, 1/0 x 3' with VG01GA	12 (3.657)	3	13.6 (6.17)
VG11034B	**VGF11034B**	Grounding Set, 4 Leads, 1/0 x 3' with VG01GA	12 (3.657)	3	13.6 (6.17)

Optional ground set label available upon request when ordering.

4 WAY CONNECTOR SET

The **4-Way Connecter Sets** are made with #2 clear-jacketed, extra flexible cable, three 8-foot (2.44 m) leads from the heads to the common connection, and one 50-foot (15.25 m) lead from the common connection to the ground connection. The grounding 4-way connector set has a fixture to raise and lower the set which can be easily tied onto the pole. The 752076 grounding 4-way connector set is also supplied with 3 fiberglass handles (10078BC) and bag. The 752576 grounding 4-way connector set requires a clampstick. Sets come with bags. Other lengths and configurations available. Meets ASTM F 855 Grade 1 specifications. Maximum fault duty is 14.5 kA for 15 cycles.

Cat. No.	Description	Max. Opening in. (cm)	ASTM Grade	Weight ea. lbs. (kgs)
752076	4-Way Connector Set w/ "C" Type Clamps, Bayonet	1 1/4 (3.2)	1	32 (14.5)
752576	4-Way Connector Set w/ "C" Type Clamps, Eye	1 1/4 (3.2)	1	39 (17.9)

Optional ground set label available upon request when ordering.

4 WAY CONNECTOR & SQUEEZE-ONS

4-way connectors are used to create a common connection between the conductor leads and the ground lead of a ground set.

CB36

76630882

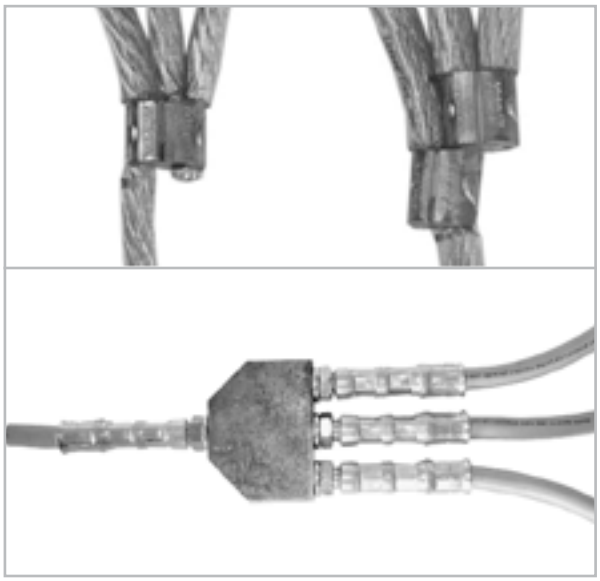

Cat. No.	Description	Qty. Required	Weight oz. (g)
CONNECTORS For Ground Sets			
76630882	Squeeze-on for #2 Cable	1	4 (112)
76630782	Squeeze-on for 1/0 - 4/0 Cable	2	4 (112)
CB36	4-Way Set Block , Cu	1	3 (1.36)
CA36	4-Way Set Block, Al	1	2 (0.9)

INDUSTRIAL GROUND 4-WAY GROUND SETS

The **Industrial Ground Set** consists of three upper ground heads, one lower head, visible trifurcation, six-foot (1.83m) leads to common connections, and a twenty foot lead from common to ground connection. All ground heads (7541B and 7541T) will accept 4"x 4"(10.2 x 10.2 cm) copper or aluminum bus configurations.

7551

Also includes a bag and a tag for installation at the main disconnect point. The 7551 includes a one-foot fiberglass handle (10012BC) for installing upper heads.

NOTE: 8106C clampstick (not included) must be used to apply 7551GA grounds. Other lengths available. Conductor size is 2/0 copper. Meets ASTM F-855 Grade 3 specifications. Maximum fault duty is 27kA for 15 cycles.

Lightweight Industrial Ground Sets are designed for smaller conductor size applications. Clamps used include screws with eyes (GA attachments) for use with a clampstick. #2 extra flexible copper ground cable is used throughout. The 75FGT0266 has six-foot (1.83 m) leads to the common connection and a six-foot lead from the common connection to ground. The 7640244GA uses four-foot (1.22 m) leads throughout. Sets include a bag. Other lengths and configurations are available.

75FGT0266

Cat. No.	Description	ASTM Grade	Weight lbs. (kgs)
INDUSTRIAL GROUND SETS			
7551	Industrial Ground Set - with Bayonet	1	35 (15.8)
7551GA	Industrial Ground Ser - with Grip-All	3	35 (15.8)

Optional ground set label available upon request when ordering.

Cat. No.	Description	Clamp Used	Fault Duty 15 Cycles	ASTM Grade	Weight ea. lbs. (kgs)
LIGHTWEIGHT INDUSTRIAL GROUND SETS					
75FGT0266	Lightweight	7575FTE	14.5 kA	1	15 (6.80)
7640244GA	Ultra Lightweight	7640001E	14.5 kA	1	13 (5.90)

Optional ground set label available upon request when ordering.

7661FG

Ground Sets include three upper heads and are easily and safely attached to the line with the fiberglass handles. The ground heads have a maximum opening of 1-3/4" (4.4 cm) and can be applied to angle irons, flat busses as well as on-line wires. A tight, four-point contact is made with the quick adjusting screw. The handles are easily removed when necessary. The lifting fixture provides ease when raising and lowering the set, and eliminates hanging the entire ground set's weight on the conductor. Other lengths and configurations available.

Parking studs provide a temporary location to attach ground clamps when raising or lowering multiple ground leads.

Shrink tube for terminal connection strain relief fits #2 through 4/0 terminals and ground cable.

Cat. No.	Cable Size	Fault Duty 15 Cycles	ASTM Grade	Weight ea. lbs. (kgs)
766FG	#2	14.5 kA	1	42 (19.0)
7661FG	1/0	21 kA	2	43 (19.5)

Standard Ground Set Includes
3 - Upper Heads
1 - Lower Head
1 - Leather, Lace and Lifting Ring
74 - Cable only with 8-foot leads to common connection, and 50' from common connection to ground connection
3 - 6'6" (1.98 m) Fiberglass Handles
1 - Bag for Handles
1 Bag for Ground Set

Optional ground set label available upon request when ordering.

Cat. No.	Description	Weight oz. (g)
PARKING STUDS		
76000APS	Single Stud	3 (84)
SHRINK TUBE		
761ST	6" (15 cm) for Shrouded Ferrules	6 (168)

NEUTRAL JUMPER ASSEMBLY

The **Concentric Neutral Jumper Assembly** is used for bonding purposes on non-jacketed cable. It is usually installed across a portion of cable to be cut, repaired, or spliced. The assembly is left in place until the concentric neutral is spliced. As a safety precaution, follow all of your organization's applicable rules and/or policies pertaining to faulted cable, spiking, and grounding.

Made with two ground clamps and 4 feet (1.22 m) of 1/0 clear jacketed extra flexible copper cable. The concentric neutral ground clamp is spring pressured. The assemblies have a continuous current rating of 250 amps and fault rated to ASTM Grade 1, 14 KA for 15 cycles. Other lengths are available. Bag not included.

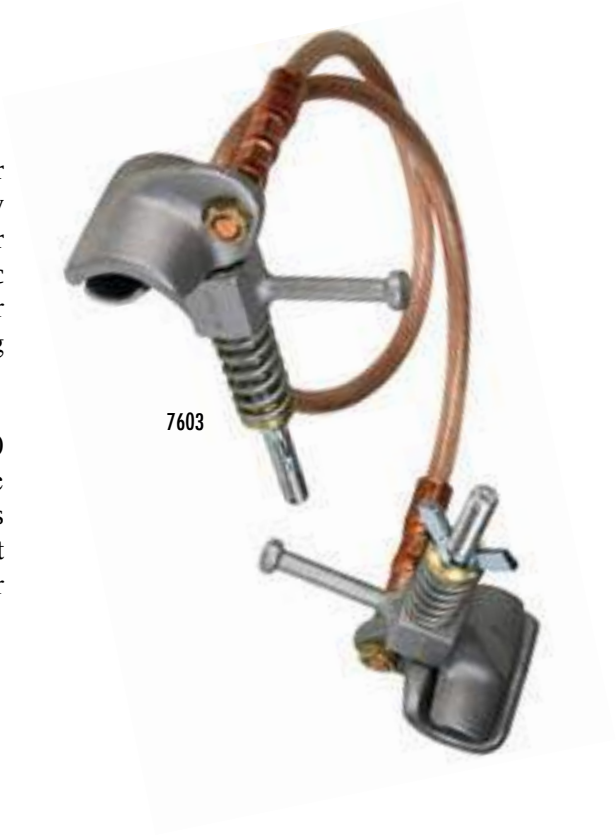

Cat. No.	Description	For Cable Diameter in. (cm)	Weight lbs. (kgs)
CONCENTRIC NEUTRAL JUMPER ASSEMBLY			
7603	Assembly	3/4 to 2 (1.9 - 5.1)	12 (5.44)
7603GA	Grip-All Assembly	3/4 to 2 (1.9 - 5.1)	12 (5.44)
7604	Assembly	2 to 4 (5.1 - 10.2)	12 (5.44)
7604GA	Grip-All Assembly	2 to 4 (5.1 - 10.2)	12 (5.44)
Parts			
7603C	Clamp with Wing Nut		4 (1.81)
7603CGA	Clamp with Grip-All		4 (1.81)
7604C	Clamp with Wing Nut		4 (1.81)
7604CGA	Clamp with Grip-All		4 (1.81)

Optional ground set label available upon request when ordering.

The components of the **Underground Dead Break Ground Set** provide safe and simple grounding methods on padmount transformers or any related URD equipment. These grounds can be ordered in complete sets or individual components. The jumpers are made with 6 foot (1.83 m) lengths of #2, clear-jacketed, extra flexible cable. Clamps (7640001E) supplied include an eye for a grip-all insulating stick application.

The **URD Grounding Assembly** is used for underground personal protective grounding elbow used for grounding pad-mounted equipment, switches and transformers when performing de-energized maintenance on URD distribution systems, and draining DC capacitive charges from de-energized URD cables.

764156STGESO

ES10YB615LB

Cat. No.	QTY	Description	Weight lbs. (kgs)
15 KV UNDERGROUND DEAD BREAK GROUND SET Local Loop			
764156STGESO		Full Assembly with Bag	21 (9.52)
Assembly Includes:			
764156234H	3	Ground Jumper, 6' (1.83 m)	6 (2.72)
764000ST	3	Ground Stud for Low Profile Transformer	1 (0.45)
764015GE	3	15 kV Ground Elbow	1 (0.45)
764015S0	3	15 kV Ground Standoff with Spring Bail	1 (0.45)
B1715	1	Protective Bag	2 (0.91)

Optional ground set label available upon request when ordering.

Cat. No.	Description	Weight lbs. (kgs)
URD GROUNDING ASSEMBLY		
ES10Y615LB	Single, 15 kV	9 (4.08)
ES1Y21015LB	Set, 15 kV	22 (9.98)
ES10Y625LB	Single, 25 kV	10 (4.53)
ES1Y21025LB	Set, 25 kV	23 (10.43)
ES10Y635LB	Single, 35 kV	10 (4.53)
ES1Y21035LB	Set, 35 kV	23 (10.43)

Optional ground set label available upon request when ordering.

GROUNDED BUSHING SETS & ELBOW GROUNDING SETS

200 AMP

EB100615

EB1021015

EB1021015LB

764015SO

764150025LSO

ES1021015LB

The **single Grounded Bushing Set** is a single lead made from 6 feet (1.83 m) of 1/0 cable. The bushing set consists of 3 bushing assemblies connected together with 3-foot (0.92 m) leads to a common connection, and 10 feet (3.05 m) from common connection to ground. The conductor is made of 1/0 clear jacketed copper stranded cable. The ground clamp (7640001E) can be applied with a clampstick. Sets come complete with bag; single leads do not. All sets are rated for 10 kA for 10 cycles. Other lengths and configurations are available.

Ground Bushings with Connections (parking stands for 'J' boxes or padmounts) provide a safe, convenient ground for elbows and a "positive" test to ensure a de-energized elbow.

The **Elbow Grounding Set** includes a single lead made from 6 feet (1.83 m) of 1/0 cable. This set consists of 3 elbow assemblies connected together with 3-foot (0.92 m) leads to a common connection, and 10-feet (3.05 m) from a common connection to ground. The conductor is made of 1/0 clear jacketed copper stranded cable. A ground clamp (7640001E) can be applied with a clampstick. Sets are rated for a maximum fault current of 10,000 amps for 10 cycles. Sets come complete with bag; single leads do not. Other lengths and configurations are available.

Cat. No.	Description	Weight lbs. (kgs)
200 AMP GROUNDED BUSHING SETS		
Dead Break		
EB100615	Single, 15 kV	8 (3.63)
EB1021015	Set, 15 kV	20 (9.30)
Load Break		
EB100615LB	Single, 15 kV	9 (4.08)
EB1021015LB	Set, 15 kV	22 (9.98)
EB100625LB	Single, 25 kV	10 (4.53)
EB1021025LB	Set, 25 kV	23 (10.43)

Optional ground set label available upon request when ordering.

Cat. No.	Description	Weight lbs. (kgs)
200 AMP GROUNDED BUSHINGS WITH CONNECTIONS		
Dead Break		
764015SO	15 kV	1 (0.45)
Load Break		
764150015LSO	15 kV	2 (0.91)
764150025LSO	25 kV	4 (1.81)

Optional ground set label available upon request when ordering.

Cat. No.	Description	Weight lbs. (kgs)
200 AMP ELBOW GROUNDING SETS		
Dead Break		
ES100615	Single, 15 kV	8 (3.63)
ES1021015	Set, 15 kV	20 (9.30)
Load Break		
ES100615LB	Single, 15 kV	9 (4.08)
ES1021015LB	Set, 15 kV	22 (9.98)
ES1LY635	Single, 35 kV	10 (4.53)
ES3LY635	Set, 35 kV	23 (10.43)
ES100625LB	Single, 25/35 kV	10 (4.53)
ES1021025LB	Set, 25/35 kV	23 (10.43)

Optional ground set label available upon request when ordering.

ASTM F855-09 Table 1 - Protective Grounding Clamp Ratings

TABLE 1 Protective Ground Cable, Ferrule, Clamp and Assembly Ratings for Symmetrical Current

Grade	Grounding Clamp Torque Strength, min				Short Circuit Properties[A]							Continuous Current Rating, A RMS, 60 Hz
	Yield[B]		Ultimate		Withstand Rating, Symmetrical kA RMS, 60 Hz			Ultimate Rating Capacity[CD], Symmetrical kA RMS, 60 Hz				
	lbf·in.	n·m	lbf·in.	n·m	15 cycles (250 ms)	30 cycles (500 ms)	Copper Cable Size	15 cycles (250 ms)	30 cycles (500 ms)	60 cycles (1 s)	Maximum Copper Test Cable Size	
1	280	32	330	37	14	10	#2	18	13	9	2/0	200
2	280	32	330	37	21	15	1/0	29	21	14	4/0	250
3	280	32	330	37	27	20	2/0	37	26	18	4/0	300
4	330	37	400	45	34	25	3/0	47	33	23	250 kcmil	350
5	330	37	400	45	43	30	4/0	59	42	29	250 kcmil	400
6	330	37	400	45	54	39	250 kcmil or 2 2/0	70	49	35	350 kcmil	450
7	330	37	400	45	74	54	350 kcmil or 2 4/0	98	69	48	550 kcmil	550

[A] Withstand and ultimate short circuit properties are based on performance with surges not exceeding 20 % asymmetry factor (see 9.1 and 12.3.4.2).
[B] Yield shall mean no permanent deformation such that the clamp cannot be reused throughout its entire range of application.
[C] Ultimate rating represents a symmetrical current which the assembly or individual components shall carry for the specified time.
[D] Ultimate values are based upon application of Onderdonk's equation to 98 % of nominal circular mil area allowed by Specifications B 172 and B 173.

Reprinted, with permission, from ASTM F 855-09 Standard Specification for Temporary Protective Grounds to Be Used on De-energized Electric Power Lines and Equipment Table 1, copyright ASTM International, 100 Barr Harbor Drive, West Conshohocken, PA 19428. A copy of the complete standard may be obtained from ASTM, www.astm.org

ASTM F855-09 Table 2 - Grounding Cable Ferrule and Assembly Ratings

TABLE 2 Ultimate Assembly Rating for High *X/R* Ratio Applications

Grade	Size	High Asymmetrical Test Requirements			
		Rating Rated Current (kA)	*X/R* = 30 1st Cycle Current Peak (kA) X 2.69	Last Cycle Current Peak (kA)	Test Duration (cycles)
1H	No. 2	15	41	23	15
2H	1/0	25	65	37	15
3H	2/0	31	84	46	15
4H	3/0	39	105	58	15
5H	4/0	47	126	70	15
6H	250 MCM	55	148	82	15
7H	350 MCM	68	183	101	15

NOTE 1—The above current values are based on electromechanical test values.
NOTE 2—Assemblies that have been subjected to these shall not be re-used.
NOTE 3—For use with currents exceeding 20 % asymmetry factor.
NOTE 4—See X4.7.2 for additional information.
NOTE 5—Alternate testing circuits are available for laboratories that cannot achieve the above requirements. See Appendix X4 for details.

Reprinted, with permission, from ASTM F 855-09 Standard Specification for Temporary Protective Grounds to Be Used on De-energized Electric Power Lines and Equipment Table 2, copyright ASTM International, 100 Barr Harbor Drive, West Conshohocken, PA 19428. A copy of the complete standard may be obtained from ASTM, www.astm.org

TEMPORARY PROTECTIVE GROUNDING EQUIPMENT ACCESSORIES

TEMPORARY PROTECTIVE GROUNDING EQUIPMENT ACCESSORIES

BALL & SOCKET SYSTEM

BALL STUDS

The **ball Studs** and the **Offset nema Pad ball Studs** are made from tin-plated copper alloy or copper. They each have a 1" (25.4mm) diameter ball. Recommended installation torque of 300 in. lbs. The short stud is used conventionally. The long stud can also be used as the grounding point for "C" or Duck bill clamps that have a jaw width of 2.75" or less. The Offset Nema Pad Ball Stud has the standard Nema bolt hole spacing and also comes in both long and short lengths.

The **ball Stud Cover,** made from orange SALCOR®, allows for multiple angle application when installed using a clampstick.

Cat. No.	Description	Dimensions in. (mm) OAL	Thread	Shank	ASTM Grade	Weight ea. lbs. (kgs)
Thread Size - 1/2" - 13 UNC - 2A						
21191	Ball Stud Short, Tin-Plated Copper Alloy	4.38 (111)	2.12 (54)	1 (25)	5	.53 (.23)
7542121BS	Ball Stud, Copper Alloy	4.7 (119)	2.25 (57)	1 (25)	5	9 (16)
21192	Ball Stud Long, Tin-Plated Copper Alloy	6.13 (156)	2.12 (54)	2.75 (70)	5	.81 (.37)
7542123BST	Ball Stud, Tin-Plated Copper Alloy	6.78 (172)	2.5 (64)	2.875 (73)	5	13 (23)
7542123BS	Ball Stud, Copper Alloy	6.78 (172)	2.5 (64)	2.875 (73)	5	13 (23)
7542125BST	Ball Stud, Tin-Plated Copper Alloy	9 (229)	2.12 (54)	5.5 (140)	5	16 (28)
7542905BS	90^0 Ball Stud, Copper Alloy	7 (178) x 5.2 (132)	2.12 (54)	5.5 (140), 2 (51)	3	20 (35)
7542905BST	90^0 Ball Stud, Tin-Plated Copper Alloy	7 (178) x 5.2 (132)	2.12 (54)	5.5 (140), 2 (51)	3	20 (35)
Thread Size - 3/8" - 16 UNC - 2A						
7542385BST	Ball Stud, Tin-Plated Copper Alloy	9 (229)	2.12 (54)	5.5 (140)	5	16 (28)
NEMA Pads and Pothead Stud						
21846	90° Offset NEMA Pad, Tin-Plated Copper Alloy	5.75 (147)	-	2.7 (69)	5	1 (.45)
21228	Offset NEMA Pad Short, Tin-Plated Copper Alloy	5.14 (131)	-	1 (25)	5	.84 (.38)
24087	Offset NEMA Pad Long, Tin-Plated Copper Alloy	6.9 (175)	-	2.7 (69)	5	1 (.45)
7542PHS	Pothead Stud, Spade, Brass	5.4 (137)	-	-	2	14 (25)
Internal Thread - 1/2" - 13 UNC - 2A						
24082	Internal Thread Ball Stud, Tin-Plated Copper Alloy	3.85 (98)	1.5 (38)	.75 (19)	5	.54 (.25)
7542K	3/4" Ground Knob, Brass	1.4 (36)	1 (25)	.75 (19)	3	6 (11)
7542001BSF	Female Ball Stud, Brass	-	1.5 (38)	1 (25)	2	14 (25)
21236	Cover for Ball Stud	3 (76)	n / a	n / a	n / a	.09 (.04)

GROUNDING CLAMP HANGER STUDS

Hanger Studs are designed to be used with all "C" and Duck Bill ground clamps. Hanger Studs are used to hold one clamp of a set while the other is being installed on the de-energized line. Hanger Studs are not designed or tested to carry current.

21754 grounding Clamp Hanger Stud can only be placed on clamps designed with a screw down strain relief system.

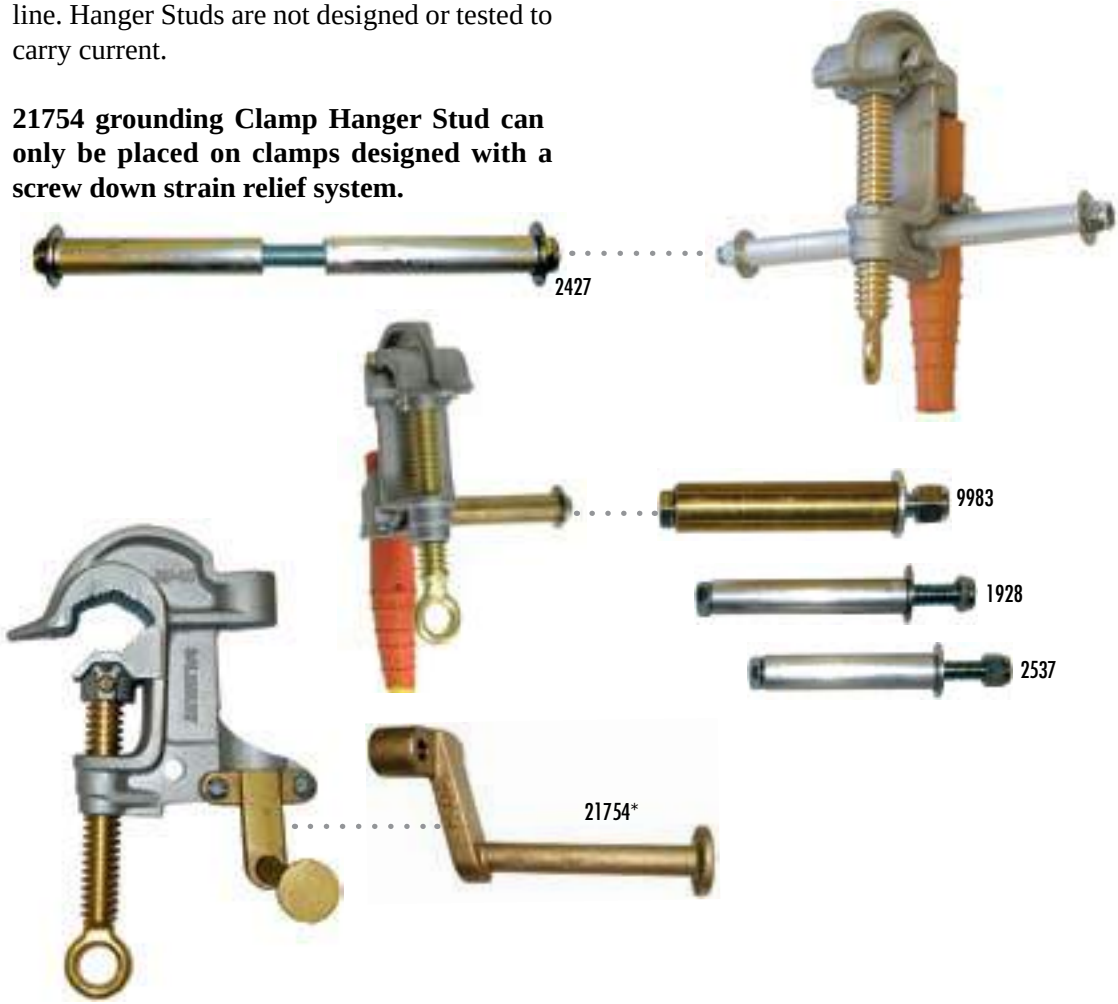

Cat. No.	Stud	For Use With	Weight ea. lbs. (kgs)
1858	Hanger	Aluminum Duck Bill 1", 1.25", 1.66"	.5 (.2)
1928	Hanger	Aluminum "C" Clamps 1.25", 1.5", 2.4", 3.5"	.5 (.2)
2427	Double Hanger	Aluminum "C" Clamps 1.25", 1.5", 2.4", 3.5"	.5 (.2)
2537	Hanger	Aluminum "C" Clamps 1"	.5 (.2)
2093	Hanger	556 Bronze Duck Bill, 477 Brz. "C"Clamp	.5 (.2)
9983	Hanger	Brass 1", 1.25", 2.4" "C"Clamps	.5 (.2)
21754*	Hanger	Bronze 1", 1.25", 2.4" "C"Clamps	.5 (.2)

*For use with only Plain Ferrule Clamps and Threaded Ferrule Clamps with a screw down strain relief restraint system.

The **"T" Handle adapter** allows the user to quickly and easily change an eye screw into a "T" handle screw.

760001HDL

adapters are used on any pin type ground clamps. Meets ASTM F-855 Grade 5 specifications. Maximum fault duty is 43 kA for 15 cycles.

Cat. No.	Weight lbs. (kgs)
"T" HANDLE ADAPTER	
760001HDL	0.5 (0.21)

7300ABC

7310G

Cat. No.	Description	Weight lbs. (kgs)
ADAPTERS		
7300ABC	Pin to Threaded Adapter	0.5 (0.21)
7310G	Eye Bolt Assembly	0.5 (0.21)
7300AET	Pin to Threaded Adapter	0.5 (0.21)

7300AET

Truck grounding Reels are designed to provide a secure and efficient way to ground trucks and equipment when working on or near energized lines. Bolt-down design allows easy removal of reels for installation on vehicles. Heavy duty construction for rugged field use. Independently tested to 14.5 kA for 30 cycles. Reels with factory installed cable include 6-foot equal gauge and frame bonding jumper. Other end must be attached to frame of vehicle.

HCR0250

Cat. No.	Cable Length	Cable Size	Fault Duty 15 CYCLES	ASTM F-855 Grade	Weight lbs. (kgs)
TRUCK GROUNDING REEL SPRING REWIND, 760001E Clamp					
HSCR0240	40' (12.2 m)	#2	14.5 kA	1	39 (17.7)
HSCR0250	50' (15.2 m)	#2	14.5 kA	1	42 (19.0)
HSCR1040	40' (12.2 m)	1/0	21 kA	2	48 (21.7)
HSCR1050	50' (15.2 m)	1/0	21 kA	2	53 (24.0)
TRUCK GROUNDING REEL HAND REWIND, 760001E Clamp					
HCR0240	40' (12.2 m)	#2	14.5 kA	1	36 (16.3)
HCR0250	50' (15.2 m)	#2	14.5 kA	1	39 (17.7)
HCR1040	40' (12.2 m)	1/0	21 kA	2	46 (20.8)
HCR1050	50' (15.2 m)	1/0	21 kA	2	51 (23.1)
REELS WITHOUT CABLE					
HSCR1	Reel only, spring rewind		21 kA	2	27 (12.2)
HCR1	Reel only, hand rewind		21 kA	2	25 (11.3)
HC1	Reel storage only, hand rewind		N/A	N/A	26 (11.8)

NOTE:

- Model HSCR1, with spring rewind, will store and operate with a maximum of 60 feet (18.3 m) of #2 cable and 50 feet (15.2 m) of 1/0 cable.
- Reel models HCR1 and HC1 will store a maximum length of 150 feet (45.8 m) of #2 cable and 85 feet (25.9 m) of 1/0 cable.
- To order factory installed cable of lengths different than shown above, give reel model number and length of cable required. Lengths should not exceed maximum operating and storage capacities.
- The use of 2/0 and 4/0 cable is not recommended since the fault duty rating of these cables exceeds that of the truck grounding reel.

Pole mounted Contact bars are designed to act as a convenient common point for electrical connections and also as a hanger for grounding sets during installation and removal. Supplied with a chain and an adjustable wheel binder that will accommodate most common pole diameters. Catalog #20880 has one 5/8-11UNC tapped hole for the permanent connection of a ground lead. The Salisbury 21840 is a lighter-weight pole mounted contact bar.

The **Pole band** is lightweight and easy to install. It is a required component of equiotential zone grounding systems.

Truck grounding Kit contains 2/0 cable, 24 inches (61 cm) long, with a chassis/frame attachment on one end and a grounding stud on the other for Cat. No. 7542TGK. Brings body and chassis to the same ground potential. Other lengths are available. Meets ASTM F-855 Grade 3 specifications.

The Salisbury 2103 **Screw Type Temporary ground Rod** is used when an adequate system ground is not available. The design incorporates a copperweld rod with bronze fittings screwed and pinned on both ends. The terminal on the handle is designed to accept cables equipped with a 5/8-11 UNC threaded ferrule. As an alternative, a "C" clamp may also be attached directly to the ground rod shaft.

Cat. No.	ASTM Grade	Description	Weight ea. lbs. (kgs)
Pole Mounted Contact Bars			
9998	5	Contact Bar No Connection 40" Chain w/ Adjustable Wheel Binder	9.1 (4.1)
21840	5	Contact Bar No Connection 40" Chain w/ Adjustable Wheel Binder	7 (3.3)
20880	5	Contact Bar One Connection 40" Chain w/ Adjustable Wheel Binder	9.1 (4.1)
SCREW GROUND ROD			
2103		75" (1.9m) long	8 (3.6)

Cat. No.	Description	Fault Duty 15 Cycles	Grade	Weight lbs. (kgs)
POLE BAND				
760001PB	Aluminum Bar	27 kA	3	4 (1.81)
760045PB	Copper Bar	43 kA	5	5 (2.27)

Cat. No.	Description	Weight lbs. (kgs)
TRUCK GROUNDING KIT		
7542TGK	Truck Grounding Kit w/ Stud	2 (0.91)
7542TGKLS	Truck Grounding Kit w/o Stud	1.5 (0.68)

Tubular brushes are preferred when rubber gloving or working on de-energized conductors. The steel bristles are internal to prevent damaging rubber gloves. The 2.5" tubular brush is used in confined areas such as between two connectors or clamps.

The **"v" Type Wire brushes** are available with epoxy-coated handle or universal attachment that can be used with hot sticks. Replacement brushes are available.

4110

4337

4108

4112

4113

4111

Cat. No.	Description in. (mm)	Weight ea. lbs. (kgs)
4108	Universal Tubular	1.3 (0.6)
4110	5" (127) Tubular	0.4 (0.2)
4111	Universal "V" Line Cleaner	1 (0.5)
4112	"V" Type handle w/ brushes	1.2 (0.6)
4113	"V" Type carton of 10 replacement brushes	3 (1.4)
4337	2.5" (63.5) Tubular	0.2 (0.1)

GROUND ELBOW & ACCESSORIES

200 AMP & 600 AMP

The **200 amP ground Elbow with Connections** may be used on single phase or three phase installations. Grounding sets come complete with extra flexible cable and connections. Elbows are rated for a maximum fault current of 10,000 amps for 10 cycles. All the clamps come with grip-all eyes for use with a clampstick.

764150015LGE

The **200 amP Elbow Connector Tool** is designed to fit all the 15kV and 25 kV rated loadbreak and non-loadbreak elbows. The jaws are contoured to provide a positive grip and not interfere with the contact interface area, allowing the elbow to operate properly while connecting or disconnecting.

9206GAS

The **600 amP Elbow Connector Tool** is designed to fit all the 15kV and 25 kV rated loadbreak and non-loadbreak elbows. The jaws are contoured to provide a positive grip and not interfere with the contact interface area, allowing the elbow to operate properly while connecting or disconnecting.

The **Insulated Elbow Remover** is used by inserting a hook in the loop on the back of any elbow while applying a hammering action. This tool can also be used to seal elbows when installing them. Other lengths available.

9202HQ

Cat. No.	Description	Weight lbs. (kgs)
200 AMP GROUND ELBOW WITH CONNECTIONS		
Dead Break		
764015GE	15 kV	1 (0.45)
Load Break		
764150015LGE	15 kV	1 (0.45)
764150025LGE	25/35 kV Small Interface	2 (0.91)

Cat. No.	Description	Weight lbs. (kgs)
200 AMP ELBOW CONNECTOR TOOL		
9202Q	Quick Change Fitting	2 (0.91)
9202U	Universal Fitting	2 (0.91)
9202GA	Grip-All Fitting	2 (0.91)
600 AMP ELBOW CONNECTOR TOOL		
9206Q	Quick Change	2 (0.91)
9206U	Universal	2 (0.91)
9206GA	Grip-All	2 (0.91)
9206GAS	With Insert Pair for 200 AMP Elbows	2 (0.91)
9202I	Insert Pair	8 (0.22)

Cat. No.	Description	Weight lbs. (kgs)
INSULATED ELBOW REMOVER		
9204HIP	4' (1.22 m) with 9202HQ	10 (4.53)
9206HIP	6' (1.83 m) with 9202HQ	11 (4.99)
9208HIP	8' (2.44 m) with 9202HQ	12 (5.44)
Parts		
9202HQ	Elbow Remover Head with Quick Change	2 (0.91)
9202HPQ	Impact Hammer with Quick Change	6 (2.72)
12524HH	Insulated Stick for 2' (0.61 m) Remover	2 (0.91)
12548HH	Insulated Stick for 4' (1.22 m) Remover	3 (1.36)
12572HH	Insulated Stick for 6' (1.83 m) Remover	4 (1.81)

The 1712 and 1725 grounding stud series are used for grounding when the fault duty on the 600 amp Deadbreak elbow/ "T" body exceeds the rating of a 200 amp grounding elbow, as rated by IEEE 386 @ 10kA for 10 cycles. Grounding studs consist of a 10" conductor stud with male or female threads for replacing 200 amp bushing wells and/or insulating plugs and a ground clamp bar for use with regular grounding jumper assemblies. After the cable has been proven de-energized, the stud is installed and a ground is applied.

The **1725001** grounding stud is made of 7/8" diameter copper with a 5/8-11 female thread on one end and a 1" (2.5 cm) hex drive on the other end. This stud is fitted with a tapered guide and a 3/8" diameter copper cross bar perch used for installing the ground. A socket drive is used for installation. For application, use catalog number 5900CS captured socket.

The **17250003**, **17250004,** and **17250005** are steel grounding plugs and studs with one 5/8" diameter perch. The perch has a sturdy lip to ensure clamp contact during faults. These models are supplied with grip-all attachments for application with insulated clampstick tools and connectors. These studs are used for grounding equipment such as non load-break connectors or power distribution connectors.

The **1735** grounding stud is made of 7/8" diameter copper with a 5/8-11 female thread on one end and a 1" (2.5 cm) hex drive on the other end for application with a socket drive. The cross bar perch is 3/4" diameter copper, providing heavy duty service. This ground plug also comes equipped with a tapered guide and the yellow protective cap.

17250003

17250004

1735

5900CS

Cat. No.	Description	Threads	Material (Stud)	ASTM F855 Grade	Fault Duty 15 Cycles	Weight lbs. (kgs)
UNDERGROUND GROUNDING STUDS						
1725001	Copper Electrode, Female, Hex Drive, w/Guide	5/8-11 (F)	Cu	1	17 kA	2.2 (1.0)
17250003	Steel Electrode, Male, Grip-All, w/Guide	5/8-11 (M)	Steel	3	27 kA	2.0 (0.9)
17250004	Steel Electrode, Female, Grip-All, w/Guide	5/8-11 (F)	Steel	3	27 kA	2.0 (0.9)
17250005	Steel Electrode, Male, Grip-All	3/4-10 (M)	Steel	3	27 kA	1.8 (0.8)
1735	Copper Electrode, Female, Hex Drive, w/Guide	5/8-11 (F)	Cu	4	35 kA	3.5 (1.6)
5900CS	Captured Socket for 1725001 and 1735					

The **Padmount Switch Hook** is designed to operate the secondary switch on a padmount transformer. Also used as a standard switch hook for cutouts. Weight - 1 lbs. (0.45 kgs).

The **underground Spanner Wrench** is designed for installing and removing the connector bushing, and reducing bushing inserts. Can be used when the conductor is de-energized, but not grounded. The tool is used one way for installation, and turned over for removal. A universal toggle and spring is used with this tool and should be ordered separately (5900Q). Weight -1 lbs. (0.45 kgs).

The **Plug Installing Tool** is used to install or remove 600 amp reducing plugs. Weight:2 lbs. (0.91 kgs).

The **ground adapter device Kit** enables application of personal grounds up to a 600 amp separable pre-molded component system when used with a clampstick.

190UGU

1720

172300

76174459

Cat. No.	Description
PADMOUNT SWITCH HOOK	
190UGQ	With Quick Change
190UGU	With Universal

Cat. No.	Description
UNDERGROUND SPANNER WRENCH	
1720	For 600 AMP Connector

Cat. No.	Description
PLUG INSTALLING TOOL	
172300	1/2" (1.3cm) Female Square Drive
172300Q	Quick Change

Cat. No.	Description	QTY	Weight lbs. (kgs)
GROUND ADAPTER DEVICE KIT - Non-Load Break			
76174459			15 (6.8)
Each Set Includes The Following:			
44C	Ratchet Wrench with Ball and Ring	1	2 (0.91)
5900Q	Universal Toggle and Spring	1	1 (0.45)
5900CS	Captured Socket with Friction Balls	1	8 oz (0.22 kgs)
9206GAS	Elbow Connector Tool with Inserts	1	2.5 (1.1)
1725001	Ground Stud	3	2.5 (1.1)
B1715	Protective Bag with Zipper	1	1 (0.45)

HYDRAULIC CABLE SPIKE

The **Hydraulic Cable Spike** is designed to verify underground cable, up to 1000MCM, is de-energized before cutting, repairing, splicing or replacing.

The cable spike, a solid brass body with a stainless steel piercing tip, is fitted to hydraulic compression tools so that the cable can be accurately spiked from a safe distance. An anodized aluminum insert is included to position the cable precisely.

The **Cable Penetrating ground Clamp** is designed to be used either as a tool for "spiking" jacketed cable or as a part of a grounding assembly used to bond both ends of an opened cable. The 7/8" long plated steel point is inserted into the eye screw making a low resistant one piece spear. If one point becomes blunted it may be sharpened or replaced with a new spear. Clamps are aluminum body with either smooth or serrated upper jaws. The hard aluminum serrated insert makes optimum contact with the stranded neutral shield.

WARNING: ELECTRIC SHOCK HAZARD
This tool is not insulated. Use only certified, non-conductive hoses, dielectric fluids, and proper personal protective equipment when using this unit. Failure to do so could result in severe injury or death.

Improves Control, Accuracy and Safety
Saves Time
Remote Controlled

Adapter fits the following tools:
Huskie EP610H
Burndy Y46
Brock 13-H

Cat. No.	Cable Length ft (m)	Description	Weight ea. lbs. (kgs)
24320	6 (1.8)	**Spiking Tool & Grounding Assembly:**	9.5 (4.3)
		Cable Spiking Tool & Insert	
24321	8 (2.4)	4388 C Clamp	11.2 (5.1)
		2139 4/0 Cu Cable	
24322	10 (3)	2025 4/0 Cu Ferrules (Pair)	12.9 (5.86)
		616 Bag	
		US Patent # 544 7450	
RPT1		Replacement Piercing Tip	1 oz (28 g)

CABLE PENETRATING GROUND CLAMP - Acme Thread - Pointed Lower Jaw			
2607	-	Aluminum 1.5" Opening, Class B, Serrated Jaw	1.7 (.8)
20867	-	Aluminum 2.40" Opening, Class B, Serrated Jaw	2.2 (1)
4290	-	Aluminum 2.40" Opening, Class A, Smooth Jaw	2.1 (1)

HYDRAULIC GROUND, BLADE, & CABLE SPIKE CLAMPS

1715EPP

17150066

Cat. No.	Description	Pump MDL / p.s.i.	Cable Assembly Cable	ASTM Fault / Duty Cycles / Grade	Weight lbs. (kgs)
HYDRAULIC GROUND SPIKE CLAMPS: Clamp Cat. No. 760001E, Spike Depth 1 5/8", Conductor Min. 1" - Max. 3"					
1715EPP	Spike Point w/ Eye Screw	1715PE / 1200	1/0 Clear	14.5kA / 15 / 1	28 (12.7)
17150060EPP	Spike Point w/ Eye-T Screw	1715PE / 1200	1/0 Clear	14.5kA / 15 / 1	28 (12.7)
17150060PFP	Spike Point w/ Eye-T Screw	1715PE / 1200	1/0 Clear	14.5kA / 15 / 1	32 (14.5)

NOTE: Suffix EPP = Enerpac Pump Suffix PFP = Porter Ferguson Pump

Cat. No.	Pump MDL / p.s.i.	Spike Depth	Conductor Max in. (cm)	Cable Assembly Cable	ASTM Fault / Duty Cycles / Grade	Weight lbs. (kgs)
HYDRAULIC BLADE SPIKE CLAMPS: Spike Blade w/ Eye Screw, Clamp Cat. No. 760001E						
17150063EPP	1715EP25 / 2500	3"	2 1/4 (5.7)	1/0 Clear	14.5kA / 15 / 1	30 (13.6)
17150063PFP	1715PF25 / 2500	3"	2 1/4 (5.7)	1/0 Clear	14.5kA / 15 / 1	34 (15.4)
17150066	1715P392 / 10000	6"	4 1/2 (10.8)	1/0 Clear	14.5kA / 15 / 1	85 (38.6)

NOTE: Suffix EPP = Enerpac Pump Suffix PFP = Porter Ferguson Pump

1712GA

17150050

Cat. No.	Description	Cable Assembly Cable / Clamp Cat. No.	ASTM Fault / Duty Cycles / Grade	Weight lbs. (kgs)
HAND OPERATED GROUND SPIKE: Spike Depth 1 3/4", Conductor Min. 1" - Max. 3 1/2"				
1712CS	3' FG Hndl, Toggle /GA	1/0 Clear / 760001E	14.5kA / 15 / 1	15 (6.8)
1712Q	Spike Point w/QC	1/0 Clear / 760001E	14.5kA / 15 / 1	10 (4.5)
1712U	Spike Point w/U	1/0 Clear / 760001E	14.5kA / 15 / 1	10 (4.5)
1712GA	Spike Point w/GA	1/0 Clear / 760001E	14.5kA / 15 / 1	10 (4.5)

Cat. No.	Description	Pump MDL / p.s.i.	Cable Assembly Cable	ASTM Fault / Duty Cycles / Grade	Weight lbs. (kgs)
HYDRAULIC CUTTER SPIKE: Clamp Cat. No. 760001E, Conductor Min. 0" - Max. 3 1/2"					
17150050	Huskie Head	N/A / N/A	#2 Clear	14.5kA / 15 / 1	23 (10.5)
17150050WPH	Huskie Head	1715P392 /10,000	#2 Clear	14.5kA / 15 / 1	52 (23.6)

ACCESSORIES FOR UNDERGROUND SPIKE TOOLS

Cat. No.	Description
Spikes, Blades and Tool Heads	
1710E	Spike Point Complete for 1710
1710F	Spike Blade Complete for 1710
1712E	Carbide Spike Point Only
1715E	Spike Point Complete for 1715
1715GS	Ground Shaft Complete for 1715 (Includes Shaft and Spike Point)
171550SP100A	Huskie Cutter Head Only
Hydraulic Pump Assemblies and Pumps	
1715PE	Enerpac Pump w/ Fittings, 1200 psi
1715P142	Enerpac Pump Only, 1200 psi
1715PE25	Enerpac Pump w/ Fittings, 2500 psi
1715PE14225	Enerpac Pump Only, 2500 psi
1715PE100	Enerpac Pump w/ Fittings, 10000 psi
1715P392	Enerpac Pump Only, 10000 psi
1715PE	Enerpac Pump w/ Fittings, 1200 psi
1715PF	Porter Ferguson Pump w/ Fittings, 1200 psi
1715SM0033	Porter Ferguson Pump Only, 1200 psi
1715PFSD	Porter Ferguson Pump w/ 1/4" Fittings, 1200 psi
1715PF25	Porter Ferguson Pump w/ Fittings, 2500 psi
1715SM003325	Porter Ferguson Pump Only, 2500 psi
Hydraulic Hose Assemblies and Hoses	
1715H	30' Non-conductive Hose w/ Fittings, 3000 psi
1715H1	30' Hose Only, 3000 psi
1715HSD	30' Non-conductive Hose w/ 1/4" Fittings, 3000 psi
1715HSD1	30' Hose Only, 3000 psi
17150066H	30' High Pressure Non-conductive Hose w/ Fittings, 10000 psi
17150066H1	30' High Pressure Hose Only, 10000 psi
Hydraulic Ram Assemblies and Rams	
1715R	Enerpac Ram w/ Fittings, 1 5/8" Stroke
1715RCH121	Enerpac Ram Only, 1 5/8" Stroke
1715RSD	Enerpac Ram w/ 1/4" Fittings, 1 5/8" Stroke
171561RCH123	Enerpac Ram Only, 3" Stroke
17150066R	Enerpac Ram w/ Fittings, 6" Stroke
1715RCH306	Enerpac Ram Only, 6" Stroke
Protective Bags	
B1710	Bag for 1710: 52" x 15" Yellow Vinyl Strap Tie Bag, 4 Tool Compartments, Outer Pocket
B1715	Bag for 1712, 1715, 17150060: 20" x 14" x 5" Yellow Vinyl, Zipper, Outer Pocket, Straps
B17150050	Bag for 17150050, 17150063: 26" x 12" x 8" Yellow Vinyl, Zipper, Outer Pocket, Straps
1370BF1	Storage Box for 17150066: 44" x 12" x 15" Wooden, Hinged, Latched, Forklift Stringers

1710E

1710F

1715GS

1715PF

1715H

B1715

HOT STICKS & TOOLS

HOT STICKS & TOOLS

FAQ

Q: Are rescue sticks required to be periodically electrically tested?

A: Yes, see OSHA 1910.269(j) for specific testing requirements.

FIBERGLASS HOT STICKS

STANDARD SPECIFICATIONS

There are a variety of Fiberglass Reinforced Plastic (FRP) constructions used for hot sticks. Included are foam filled tubular sticks used for all products requiring solid construction. All Salisbury fiberglass sticks meet ASTM F711 Standard Specifications for FRP and tube used in live line tools and IEC 855.

Foam Filled Hot Stick

Foam filled hot sticks are manufactured using the pultrusion process. This method incorporate fiberglass reinforcement in a resin matrix which creates a moisture resistant laminate with excellent electrical and mechanical properties.

Hot stick production is 100% electrically proof tested. Hot Stick blanks must conform with ASTM F711 requirements.

Live Line Work Minimum Approach Distance

Nominal Voltage kV	Exposure Distance ft.-in (m) Phase to Ground	Phase to Phase
.05 to 1	avoid contact	avoid contact
1.1 to 15	2-1 (.64)	2-2 (.66)
15.1 to 36	2-4 (.72)	2-7 (.77)
36.1 to 46	2-7 (.77)	2-10 (.85)
46.1 to 72.5	3-0 (.9)	3-6 (1.05)
72.6 to 121	3-2 (.95)	4-3 (1.29)
138 to 145	3-7 (1.09)	4-11 (1.5)
161 to 169	4-0 (1.22)	5-8 (171)
230 to 242	5-3 (1.59)	7-6 (2.27)
345 to 362	8-6 (2.59)	12.6 (3.8)
500 to 550	11-3 (3.42)	18-1 (5.5)
765 to 800	14-11 (4.53)	26-0 (7.91)

- These distances take into consideration the highest switch surge an employee will be exposed to on any system with air as the insulating medium and the maximum voltage shown.
-The clear live-line total distances shall equal or exceed the values for the indicated voltage ranges.

Tough Thermoplastic head ferrule.
EZ Grip plastic hand grip.
Wide opening 15/16" (23.8mm) stainless steel hook.
Heavy duty rubber end cap.

External Rod Clampsticks are constructed of closed cell foam-filled tubular fiberglass in accordance with ASTM standard F711. The hook's operating rod, made of solid 3/8" (9.5mm) dia. fiberglass, is mounted on the exterior of the tool so that it can be easily wiped down prior to use.

These Clampsticks meet ASTM F1825 Standards.

Side Opening Hook

9840 Splined Universal Head

External Rod Clampstick

Cat. No.	Length Feet	Length Meters	Weight ea. lbs.	Weight ea. kgs
EXTERNAL ROD CLAMPSTICK				
4007*	4' 8"	1.32	4.2	1.9
4008*	5' 8"	1.62	4.6	2.1
4009*	6' 8"	1.93	5.2	2.4
4010*	8' 8"	2.54	6.2	2.8
4011*	10' 8"	3.15	7.0	3.2
4012*	12' 8"	3.76	7.7	3.5
4013*	14' 8"	4.37	9.4	4.3
EXTERNAL ROD CLAMPSTICK - PLAIN CAP				
8106C	6'6"	1.98	5	2.27

*Add a "9864" suffix for a Switch Stick Head or a "9840" suffix for a Splined Universal Head. Clamp sticks may be ordered with these fittings attached to the end by adding the appropriate suffix to the catalog number.

UNIVERSAL SWITCH STICKS

One, two, and three section hot sticks have a standard splined universal head. 1.25” dia. switch sticks are supplied with a #9971 Prong. A Heavy Duty Disconnect Prong #9969 is supplied on all others.

9969 Prong

9971 Prong

Universal Switch Stick

Cat. No.	Dimensions: Dia. x Length		Weight ea. lbs.	kgs
ONE SECTION	in x ft.	mm x m		
4213	1.25 x 4	31.7 x 1.2	2.6	1.2
4214	1.25 x 6	31.7 x 1.8	3.4	1.5
4215	1.25 x 8	31.7 x 2.4	4.1	1.9
4216	1.25 x 10	31.7 x 3	4.9	2.2
4217	1.25 x 12	31.7 x 3.6	5.6	2.5
4218	1.25 x 14	31.7 x 4.3	6.4	2.9
4219	1.5 x 8	38.1 x 2.4	5.4	2.5
4220	1.5 x 10	38.1 x 3	6.5	3
4221	1.5 x 12	38.1 x 3.6	7.5	3.4
4222	1.5 x 14	38.1 x 4.3	8.6	3.9
4223	1.5 x 16	38.1 x 4.9	9.8	4.3
4225	1.5 x 20	38.1 x 6	11.7	5.3

TWO SECTIONS	OAL Length		Top		Bottom		lbs.	kgs
	ft.	m	in. x ft.	mm x m	in. x ft.	mm x m		
4036	8	2.4	1.25 x 4	31.7 x 1.2	1.25 x 4	31.7 x 1.2	4.2	1.9
4037	10	3	1.25 x 5	31.7 x 1.5	1.25 x 5	31.7 x 1.5	5.2	2.2
4038	12	3.6	1.25 x 6	31.7 x 1.8	1.5 x 6	38.1 x 1.8	6.9	3.1
4039	14	4.3	1.25 x 6	31.7 x 1.8	1.5 x 8	38.1 x 2.4	7.9	3.1
4040	16	4.9	1.25 x 8	31.7 x 2.4	1.5 x 8	38.1 x 2.4	8.6	3.9
4041	18	5.5	1.25 x 8	31.7 x 2.4	1.5 x 10	38.1 x 3	9.6	4.4
4042	20	6	1.25 x 10	31.7 x 3	1.5 x 10	38.1 x 3	10.4	4.7

THREE SECTION	OAL Length		Top		Middle / Bottom		lbs.	kgs
	ft.	m	in x ft.	mm x m	in. x ft.	mm x m		
4043	12	3.6	1.25 x 4	31.7 x 1.2	1.5 x 4	38.1 x 1.2	7.7	3.5
4044	15	4.6	1.25 x 5	31.7 x 1.5	1.5 x 5	38.1 x 1.5	9.1	4.1
4045	18	5.5	1.25 x 6	31.7 x 1.8	1.5 x 6	38.1 x 1.8	10.5	4.7
4046	20	6	1.25 x 8	31.7 x 2.4	1.5 x 6	38.1 x 1.8	16.5	7.5

HEAD ONLY						
9840	1.25	31.7	Universal Head	0.2	0.1
9841	1.5	38.1	Universal Head	0.3	0.1

FRP Splices with Button

FIBERGLASS HOT SWITCH STICKS

Switch Sticks use closed cell foam filled tubular fiberglass made in accordance with ASTM Standard F711. Both the standard head and the heavy duty prong disconnect are made of durable high strength aluminum bronze alloy.

Standard Prong

Heavy Duty Prong

Fiberglass Hot Switch Stick

Cat. No. HD	Cat. No. Std Prong	Dimensions: Dia. x Length in. x ft.	Dimensions: Dia. x Length mm x m	Weight ea. lbs.	Weight ea. kgs
ONE SECTION					
9950	**9933**	1.25 x 4	31.7 x 1.2	2.1	1
9951	**9934**	1.25 x 6	31.7 x 1.8	2.9	1.3
9952	**9935**	1.25 x 8	31.7 x 2.4	3.6	1.6
9953	**9936**	1.25 x 10	31.7 x 3	4.4	2
9954	**9937**	1.25 x 12	31.7 x 3.6	5.1	2.3
9955	**9938**	1.25 x 14	31.7 x 4.3	5.9	2.7
9956	**9939**	1.5 x 8	38.1 x 2.4	5	2.3
9957	**9940**	1.5 x 10	38.1 x 3	6	2.7
9958	**9941**	1.5 x 12	38.1 x 3.6	7	3.2
9959	**9942**	1.5 x 14	38.1 x 4.3	8.1	3.7
9960	**9943**	1.5 x 16	38.1 x 4.9	9.1	4.1
9961	**9944**	1.5 x 18	38.1 x 5.5	10.2	4.6
9962	**9945**	1.5 x 20	38.1 x 6	11.2	5.1

TWO SECTION		OAL Length ft.	OAL Length m	Top in. x ft.	Top mm x m	Bottom in. x ft.	Bottom mm x m	lbs.	kgs
4024	**-**	8	2.4	1.25 x 4	31.7 x 1.2	1.25 x 4	31.7 x 1.2	3.8	1.7
4025	**-**	10	3	1.25 x 5	31.7 x 1.5	1.25 x 5	31.7 x 1.5	4.6	2.1
4026	**4016**	12	3.6	1.25 x 6	31.7 x 1.8	1.25 x 6	31.7 x 1.8	5.3	2.4
-	**4017**	14	4.3	1.25 x 7	31.7 x 2.1	1.25 x 7	31.7 x 2.1	6.1	2.7
4028	**4018**	16	4.9	1.25 x 8	31.7 x 2.4	1.5 x 8	38.1 x 2.4	8	3.6
4029	**-**	18	5.5	1.25 x 8	31.7 x 2.4	1.5 x 10	38.1 x 3	9.5	4.3
4030	**-**	20	6	1.25 x 10	31.7 x 3	1.5 x 10	38.1 x 3	10.3	4.6

THREE SECTION		OAL Length in.	OAL Length mm	Top in. x ft.	Top mm x m	Middle / Bottom in. x ft.	Middle / Bottom mm x m	lbs.	kgs
4033	**-**	18	5.5	1.25 x 6	31.7 x 1.8	1.5 x 6	38.1 x 1.8	10.4	4.7
4034	**4035**	20	2	1.25 x 8	31.7 x 2.4	1.5 x 6	38.1 x 1.8	11.1	5

HEAD ONLY							
-	**9864**	1.25	31.7	Universal Head		0.4	0.2
9861	**-**	1.5	38.1	Universal Head		0.5	0.2

DOUBLE ENDED & TIE HEADS

4182 Cap Splice Guard

FRP Sleeve Splices are fiberglass reinforced plastic with spring loaded push buttons. They sectionize long sticks for easy storage. For splice stick assemblies other than those listed in the catalog consult the factory for quotations.

Splice guards reduce the damage to the end of spliced sticks when working with only the top sections.

FRP Splices with Button

Cat. No.	Dimensions in.	Dimensions mm	Weight ea. lbs.	Weight ea. kgs
FRP SLEEVE SPLICES				
9898	1.25 to 1.25	31.7 to 31.7	0.4	0.2
9897	1.5 to 1.25	38.1 to 31.7	0.8	0.4
9899	1.5 to 1.5	38.1 to 38.1	0.9	0.4
SPLICE GUARD CAP				
4182	1.25 I.D.	31.7 I.D.	0.2	0.1

These foam filled FRP Hot Sticks are manufactured using a pultrusion process that results in a product with extremely high electrical and mechanical qualities.

4084 Rotary Prong

4088 Double Prong Head

Cat. No.		Dimensions: Dia. x Length in. x ft.	Dimensions: Dia. x Length mm x m	Weight ea. lbs.	Weight ea. kgs
DOUBLE ENDED UNIVERSAL					
4230		1.25 x 6	31.7 x 1.8	3.3	1.5
4231		1.25 x 8	31.7 x 2.4	4	1.8
4232		1.25 x 10	31.7 x 3	4.8	2.2
4233		1.25 x 12	31.7 x 3.6	5.5	2.5
4234		1.25 x 14	31.7 x 4.3	6.3	2.8
UNIVERSAL w/ Rotary Prong or Blade					
4084	Rotary Prong	1.25 x 6	31.7 x 1.8	3.8	1.7
4085	Rotary Prong	1.25 x 8	31.7 x 2.4	4.5	2
UNIVERSAL w/ Double Prong					
4088		1.25 x 6	31.7 x 1.8	3.8	1.7
4089		1.25 x 8	31.7 x 2.4	4.5	2

Double Ended Universal Switch Stick

FIBERGLASS HOT SWITCH STICKS

DOUBLE ENDED

Fiberglass Handles are manufactured in accordance with the following specifications: ASTM F711, OSHA 1910.269(j), and OSHA 1926.951(d). All handles are made from pultruded, smooth, foam-filled fiberglass. Safety yellow is the primary fiberglass color. It is recommended that handles be wiped clean with a silicote cloth before and after every use.

The most commonly used combinations are shown below. Other lengths are available. Bags are not included but are available.

The **8900** rain guard is a yellow molded EPDM shield held in place with a hose clamp. Rain guards fit over 1-1/4" to 1-1/2" (3.2 cm to 3.8 cm) diameter handles and provide a dry handle area if the sticks are used in the rain.

Cat. No.	Diameter x Overall Length	Weight lbs. (kgs)
CAP & THREADED FERRULE		
10078CH	1" x 6'6" (2.5 cm x 1.98 m)	2 (0.91)
10096CH	1" x 8' (2.5 cm x 2.44 m)	2 (0.91)
12578CH	1 1/4" x 6'6" (3.2 cm x 1.98 m)	2 (0.91)
12596CH	1 1/4" x 8' (3.2 cm x 2.44 m)	3 (1.36)
15078CH	1 1/2" x 6'6" (3.8 cm x 1.98 m)	5 (2.27)
15096CH	1 1/2" x 8' (3.8 cm x 2.44 m)	6 (2.72)

Cat. No.	Diameter x Overall Length	Weight lbs. (kgs
TWO THREADED FERRULES		
10078HH	1" x 6'6" (2.5 cm x 1.98 m)	2 (0.91)
10096HH	1" x 8' (2.5 cm x 2.44 m)	2 (0.91)
12578HH	1 1/4" x 6'6" (3.2 cm x 1.98 m)	3 (1.36)
12596HH	1 1/4" x 8' (3.2 cm x 2.44 m)	4 (1.81)
15078HH	1 1/2" x 6'6" (3.8 cm x 1.98 m)	3 (1.36)
15096HH	1 1/2" x 8' (3.8 cm x 2.44 m)	6 (2.72)
150120HH	1 1/2" x 10' (3.8 cm x 3.05 m)	6 (2.72)
TWO INSULATED HEX FERRULES		
12578HHM	1 1/4" x 6'6" (3.2 cm x 1.98 m)	4 (1.81)
12596HHM	1 1/4" x 8' (3.2 cm x 2.44 m)	4 (1.81)
CAP & UNIVERSAL FERRULE		
10078CU	1" x 6'6" (2.5 cm x 1.98 m)	2 (0.91)
12578CU	1 1/4" x 6'6" (3.2 cm x 1.98 m)	2 (0.91)
15096CU	1 1/2" x 8' (3.8 cm x 2.44 m)	6 (2.72)
RAIN GUARD		
8900	Rain Guard w/ Hose Clamp	0.2 (0.1)

12578HH

15078CH

Quick Change Head

TOGGLE HANDLE FIBERGLASS CLAMPSTICKS

MAKE THE JOB EASIER.
Specialized Toggle Handle Increases Leverage.

The toggle handle fiberglass hot switch sticks and clampsticks include a bendable handle that provides increased leverage when needed.

Fiberglass Hot Switchsticks are manufactured in accordance with the following specifications: ASTM F711, OSHA 1910.269(j), and OSHA 1926.951(d). All handles are made from pultruded, smooth, foam-filled fiberglass. Safety yellow is the primary fiberglass color. It is recommended that handles be wiped clean with a silicote cloth before and after every use.

All **Fiberglass Clampsticks** are fixed length external rod fiberglass clampsticks which maintain maximum dielectric strength. A full open side hook provides an unobstructed view of the hook. The molded, insulated head provides a larger opening. The precision cast slide gives complete control and an extra firm grip. The hook release mechanism is easy to operate and the extended length spear provides an easy method of locating the eye of hot taps that are other-wise hard to locate. All fiberglass used is tested at 50kV / 6 inches (100kV / foot) and meets the dielectric leakage requirements of ASTM F711.

Other lengths available upon request. Bag not included.

TOGGLE MAXIMUM TORQUE RATING: 60 FOOT POUNDS.

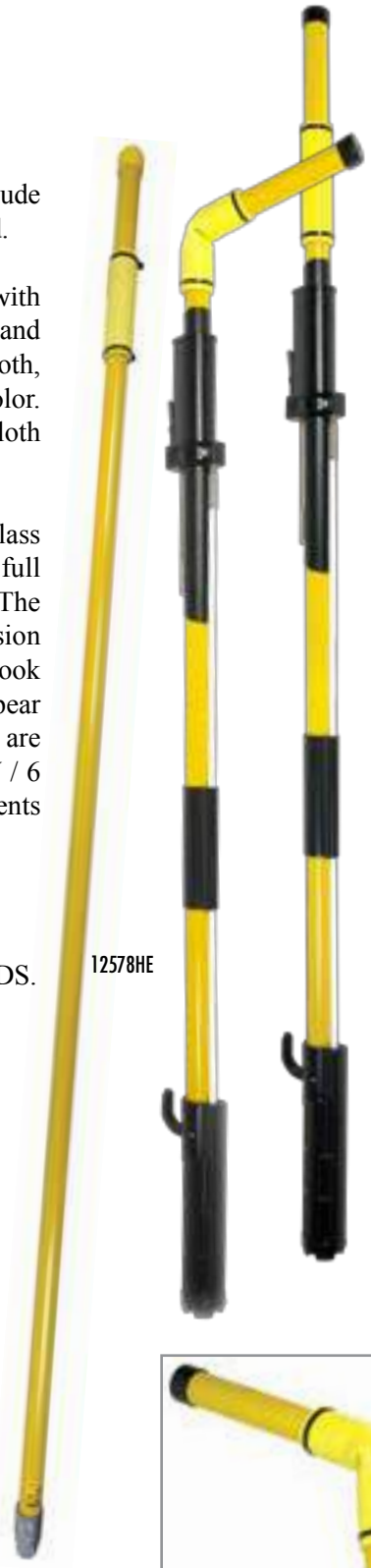

Cat. No.	Description	Weight lbs. (kgs
TOGGLE HANDLE & THREADED FERRULE		
12578HE	1 1/4" x 6'6" (3.2 cm x 1.98 m)	4 (1.81)
12596HE	1 1/4" x 8' (3.2 cm x 2.44 m)	4 (1.81)
12548HE	1 1/4" x 4' (3.2 cm x 1.22 m)	4 (1.81)
TOGGLE HANDLE & UNIVERSAL FERRULE		
12578UE	1 1/4" x 6'6" (3.2 cm x 1.98 m)	4 (1.81)
12596UE	1 1/4" x 8' (3.2 cm x 2.44 m)	4 (1.81)
12548UE	1 1/4" x 4' (3.2 cm x 1.22 m)	4 (1.81)
TOGGLE HANDLE & INSULATED HEX FERRULE		
12578HEM	1 1/4" x 6'6" (3.2 cm x 1.98 m)	4 (1.81)
12596HEM	1 1/4" x 8' (3.2 cm x 2.44 m)	4 (1.81)
TOGGLE HANDLE & CLAMPSTICK		
8104E	4'6" (1.37m) OAL Toggle Handle Fiberglass Clampstick	4.5 (2.04)
8106E	6'6" (1.98m) OAL Toggle Handle Fiberglass Clampstick	5 (2.27)
8108E	8'6" (2.59m) OAL Toggle Handle Fiberglass Clampstick	6.5 (2.95)
8110E	10'6" (3.2m) OAL Toggle Handle Fiberglass Clampstick	7 (3.18)

SPECIALTY HOT SWITCH STICKS

The **mechanical Hand Stick** serves both as a hand and as pliers so that any serve-up or type of tie can be made or removed from the line. Very little effort is required to serve a wire taut and as perfectly as when hand and pliers are used. It is possible to roll the wire into place around the conductor, making a tight connection easily, instead of jerking and pulling.

The **Wire Clamp Stick** has two fiberglass handles: the operating handle is 1" (2.5 cm) in diameter and the stationary handle is 1 1/4" (3.2 cm) in diameter. The wire clamp stick is used to hold tie wires in place, hold jumper wires while taps are being made or removed, and to hold wires when cutting and removing.

Use the **alligator Stick** to install and remove single sheave or double blocks in the top of gin poles and to install circuit breakers, line hooks and strain breakers on live lines. With the alligator stick, you can remove arm slings on cross arms, and hook blocks in arm slings and come-alongs when changing dead ends.

Cat. No.	Description	Handle Length	Weight lbs. (kgs)
MECHANICAL HAND STICK, Fiberglass handle diameter: 1-1/4" (3.2 cm)			
1FGQ	Quick Change	6'6" (1.98m)	4 (1.81)
1FGU	Universal	6'6" (1.98m)	4 (1.81)
101FGQ	Quick Change	8' (2.43 m)	5 (2.27)
101FGU	Universal	8' (2.43 m)	5 (2.27)
Head Only			
1CQ	Mechanical Hand w/ Quick Change		1 (0.45)
1CU	Mechanical Hand w/ Universal		1 (0.45)

Cat. No.	Description	Handle Length	Weight lbs. (kgs)
WIRE CLAMP STICK			
2FGQ	Quick Change	6'6" (1.98m)	6 (2.72)
2FGU	Universal	6'6" (1.98m)	6 (2.72)
201FGQ	Quick Change	8' (2.43 m)	9 (4.08)
201FGU	Universal	8' (2.43 m)	9 (4.08)
201CFGQ	Top Hook and Quick Change	8' (2.43 m)	9 (4.08)
Head Only			
2CQ	Wire with Quick Change		3 (1.36)
2CU	Wire with Universal		3 (1.36)

Cat. No.	Description	Handle Length	Weight lbs. (kgs)
ALLIGATOR STICK, Fiberglass handle diameter: 1-1/4" (3.2 cm)			
4FGQ	Quick Change	6'6" (1.98m)	4 (1.81)
4FGU	Universal	6'6" (1.98m)	4 (1.81)
408FGQ	Quick Change	8' (2.43 m)	7 (3.18)
408FGU	Universal	8' (2.43 m)	7 (3.18)
Head Only			
4DQ	Alligator with Quick Change		1 (0.45)
4DU	Alligator with Universal		1 (0.45)

SPECIALTY HOT SWITCH STICKS

The **Pigtail Stick** is designed to lift and guide live lines, and maintains clearances while working on poles. The pigtail stick is used to change pin type insulators and ridge pin insulators when the conductor is light enough for one person to lift. Units come standard with 7/8" (2.2 cm) hook; also available with 1-1/2" (3.8 cm) and 2" (5.1 cm) hooks. Other lengths available. Bag not included. Fiberglass handle diameter: 1-1/2" (3.8 cm).

The **Stranded Wire Holding Stick** has two 1" (2.5 cm) diameter fiberglass handles, holds conductors or wires during operations. The 121 Series has 3/4" (1.9 cm) wide jaws that open to 9/16" (1.4 cm), and the 122 Series, has 2" (5.1 cm) wide jaws that open to 1-1/2" (3.8 cm). Other lengths available. Bag not included.

The **Cable Handler** has a 1-1/4" (3.2 cm) fiberglass handle. Used to handle, lift, or move energized cables. Other lengths available.

Cat. No.	Description	Handle Length	Weight lbs. (kgs)
PIGTAIL STICK			
5FGQ	Quick Change	6'6" (1.98m)	6 (2.72)
5FGU	Universal	6'6" (1.98m)	6 (2.72)
501FGQ	Quick Change	8' (2.43 m)	7 (3.18)
501FGU	Universal	8' (2.43 m)	7 (3.18)
Head Only			
5C2Q	Pigtail w/ Quick Change	7/8" (2.2cm)	1 (0.45)
5C2U	Pigtail w/ Universal	7/8" (2.2cm)	1 (0.45)
5C3Q	Pigtail w/ Quick Change	1 1/2" (3.8cm)	1 (0.45)
5C3U	Pigtail w/ Universal	1 1/2" (3.8cm)	1 (0.45)
5C4Q	Pigtail w/ Quick Change	2" (5.1cm)	1 (0.45)
5C4U	Pigtail w/ Universal	2" (5.1cm)	1 (0.45)

Cat. No.	Description	Handle Length	Weight lbs. (kgs)
STRANDED WIRE HOLDING STICK			
121FGQ	Quick Change	6'6" (1.98m)	6 (2.72)
1211FGQ	Quick Change	8' (2.43 m)	6 (2.72)
1226FGQ	Quick Change	6'6" (1.98 m)	8 (3.63)
1228FGQ	Quick Change	8' (2.43 m)	8 (3.63)
Head Only			
121CQ	Stranded Wire w/ Quick Change		2 (0.91)
122CQ	Stranded Wire w/ Quick Change		2 (0.91)

Cat. No.	Description	Length	Weight lbs. (kgs)
CABLE HANDLER			
50206	Handle and head	6'6" (1.98m)	3 (1.36)
50208	Handle and head	8' (2.44 m)	4 (1.81)
5020H	Head only		1 (0.45)

The Sectionalizer Kit temporarily disconnects and isolates a section of line without interrupting service to the balance of the circuit. The entire operation of installation and removal of the sectionalizers can be performed with live line tools. Particularly useful when circuits are interrupted as a result of conductor, insulation or pole failures. Service can be restored by cutting in sectionalizers to isolate the section of line that is in trouble.

Consists of 1-3/4" foam-filled fiberglass connected to a manually operated take-up device. The strain of the line is taken by means of the take-up device using the hook (Cat. No. 1370H), which fastens on the end of the socket wrench (Cat. No. 596FG or equal). The conductor is then cut and cleared.

Cat. No.	Description	Weight lbs. (kgs)
SECTIONALIZER KIT		
1370SL	Set includes: 3 of 1370A, 1 of 1370H, 1 of 1370FB	100 (45.3)
PARTS		
1370A	One Sectionalizer Only, 25 kV, 36" (0.91 m)	12 (0.91)
1370H	Hook with 1/2" Drive	1 (0.45)
1370HR	Hold Down Hook with Ring	1 (0.45)
1370V	Wire Holder, 9/16" (1.43 cm) max. size wire	2 (0.91)
1370FB	Box w/ Inserts 44" x 12" x 16" (112 x 31 x 41 cm)	60 (27.22)

The **Insulating link Sticks** are designed to isolate rope, hoists, and blocks being used between energized conductors and a pulling device.Also provide dielectric properties if strap hoist becomes contaminated through field use.Cat. Nos.2512, 2518, and 2524 are made with solid fiberglass. All insulating link sticks are proof tested and marked with WLL prior to shipment. Other lengths and configurations available.All bags hold 3 link sticks.Bags not included.

Fiberglass used meets the requirements of ASTM F711.

Cat. No.	Overall Length in. (cm)	Length Between Ferrules in. (cm)	Fiberglass Diameter in. (cm)	WLL lbs. (kgs)	Weight lbs. (kgs)	Cat. No.	Weight lbs. (kgs)
INSULATING LINK STICKS							
50012EH	22 (55.9)	12 (30.5)	1 (2.5)	2,500 (1,134)	3 (1.36)	**B522** Bag	1 (0.45)
50012EP	22 (55.9)	12 (30.5)	1 (2.5)	2,500 (1,134)	3 (1.36)	**B522** Bag	1 (0.45)
5012EH	22 (55.9)	12 (30.5)	1 1/4 (3.2)	2,500 (1,134)	2 (0.91)	**B522** Bag	1 (0.45)
5012	22 (55.9)	12 (30.5)	1 1/4 (3.2)	1,500 (682)	2 (0.91)	**B522** Bag	1 (0.45)
5012R	22 (55.9)	12 (30.5)	1 1/4 (3.2)	1,500 (682)	2 (0.91)	**B522** Bag	1 (0.45)
5112	24 (61.0)	12 (30.5)	1 1/2 (3.8)	2,500 (1,134)	2 (0.91)	**B522** Bag	1 (0.45)
2512	28 (71.1)	12 (30.5)	1 (2.5)	10,000 (4,536)	2 (0.91)	**B522** Bag	1 (0.45)

Universal and 5/8”-11 threaded hex ferrules are available for 1” (2.5 cm), 1-1/4” (3.2 cm), and 1-1/2” (3.8 cm) diameter fiberglass handles. Ferrules include a disc and rivet.

Kits include all material required to replace insulated stick ferrules. Please specify size. Each kit includes: one ferrule, one rivet, one disc for handle, sandpaper, a two-part adhesive and instructions.

Use the **Silicote Cloth** to wipe dust and dirt from fiberglass insulating handles. Cloth is specially treated with Silicone which leaves a thin coating on the insulating handles. Grease, insulation marks, and other foreign matter should be cleaned from handles with fiberglass handle cleaner before using the silicote cloth. Regular use of the silicote cloth will add to the life and safety of insulating handles. Packaged with directions in resealable, plastic bag.

Handle Cleaner is formulated to clean and condition fiberglass handles. Removes moisture and other contaminates such as dirt, tar, and grease without harming finish and leaves a thin water-repellent coating.

Cat. No.	Description	Size	Weight oz (g)
HEXAGONAL FERRULES			
44DFG	5/8”-11 - Zinc	1” (2.5 cm)	4 (124)
4EFG	5/8”-11 - Zinc	1 1/4” (3.2 cm)	5 (156)
4EFGM	Insulated Hex Ferrule w/ Brass Threaded Insert 5/8”-11	1 1/4” (3.2 cm)	5 (156)
5EFG	5/8”-11 - Zinc	1 1/2” (3.8 cm)	12 (373)
UNIVERSAL FERRULES			
44UFG	Aluminum with Thumb Screw	1” (2.5 cm)	4 (124)
3400	Aluminum with Thumb Screw	1 1/4” (3.2 cm)	5 (156)
5EFGU	Zinc/Bronze with Thumb Screw	1 1/2” (3.8 cm)	1 lbs. (450 g)
RIVETS			
RH1881375	For 1” Ferrules	3/16” x 13/8” (5 x 34 mm)	1 (31)
RH1881625	For 1-1/4” Ferrules	3/16” x 15/8” (5 x 41 mm)	1 (31)
RH1882000	For 1-1/2” Ferrules	3/16” x 2” (5 x 51 mm)	2 (62)

Cat. No.	Handle Diameter	Weight oz (g)
HEXAGONAL FERRULE KITS		
44EK001	1” (2.5 cm)	4 (124)
4EK001	1 1/4” (3.2 cm)	4 (124)
5EK001	1 1/2” (3.8 cm)	4 (124)
UNIVERSAL FERRULE KITS		
44UK001	1” (2.5 cm)	4 (124)
4UK001	1 1/4” (3.2 cm)	4 (124)
5UK001	1 1/2” (3.8 cm)	4 (124)

Cat. No.	Description
CAPS	
C100	1” (2.5 cm) Cap
C125	1 1/4” (3.2 cm) Cap
C150	1-1/2” (3.8 cm) Cap

Cat. No.	Description	Weight oz (g)
HANDLE CLEANERS		
2000SC	Silicote Cloth	4 (124)
2001	Towelette	1 (31)
2002	1-Gal Bottle	9 lbs. (4 kgs)
2003	16 fl oz Spray Bottle	19 (.53)

STORAGE FOR HOT STICKS & TOOLS

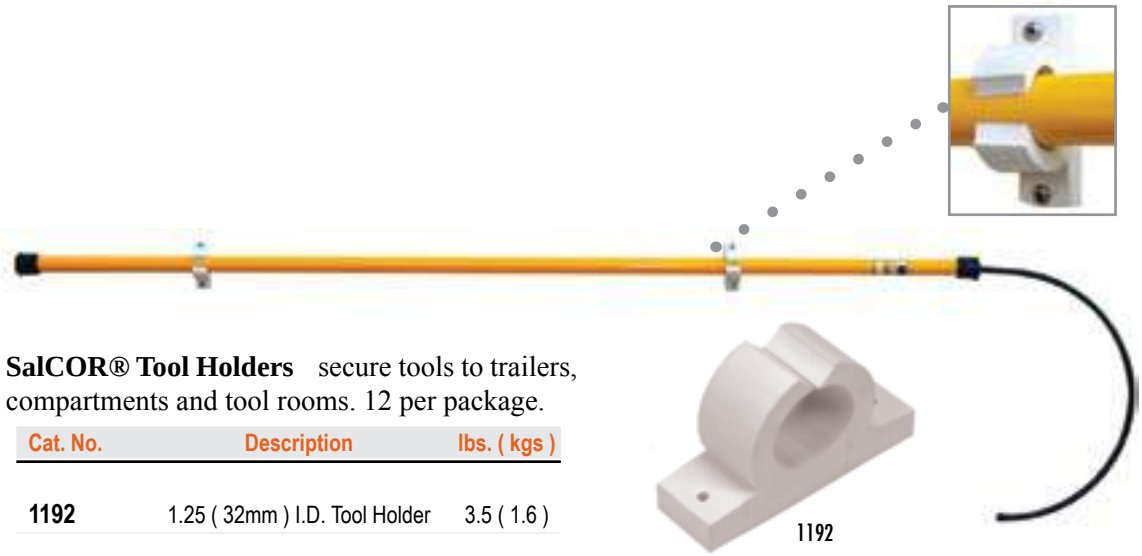

SalCOR® Tool Holders secure tools to trailers, compartments and tool rooms. 12 per package.

Cat. No.	Description	lbs. (kgs)
1192	1.25 (32mm) I.D. Tool Holder	3.5 (1.6)

Hot Stick bags are constructed of heavy vinyl with double stitched seams. Flaps snap closed. 6" (152mm) wide and designed to hold sticks up to 4" (102mm) shorter than bag length shown on chart.

Hot Stick Bag

Cat. No.	Length Feet	Length meters	Weight ea. lbs. (kgs)
HOT STICK BAGS			
4297	5	1.5	.7 (.3)
4298	6	1.8	.8 (.3)
4299	6' 4"	1.9	.9(.4)
4300	7	2	1 (.4)
4301	8'4"	2.5	1.1 (.5)
4302	9	2.7	1.2 (.5)
4303	10'4"	3	1.4 (.6)
4" I.D. TUBULAR PVC STORAGE KIT			
4155	7	2.13	17 (7.7)
4156	9	2.74	20 (9)
6" I.D. TUBULAR PVC STORAGE KIT			
4167	6	1.82	20 (9)
4168	7	2.13	22 (10)
4169	9	2.74	26 (11.7)

Tubular PvC Storage Containers provide weather tight storage. Kit includes two mounting brackets and four steel bolts with each 6" (152mm) I.D. or 4.1" (104mm) tube. Sized for tools 12" (305mm) shorter than tube. Four mounting bolts 3/8" x 1.5" (9.5 x 38mm) are supplied with each container. Kit may be ordered without tubing, or with mounting brackets only.

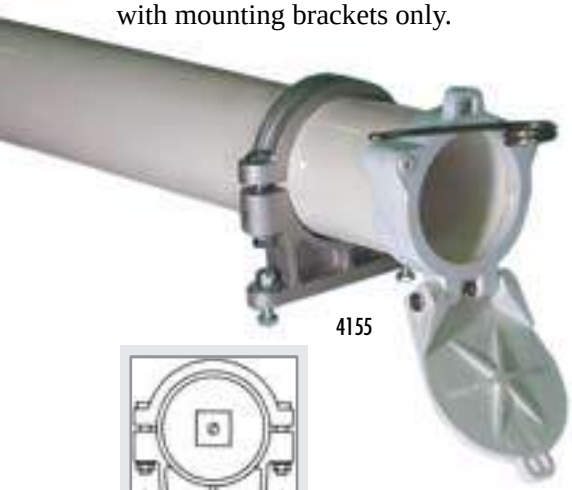
4155

5.75" (146mm) or 8" (203mm) width

Cat. No.	Description/Dimensions in. (mm)	lbs. (kgs)
9822	Kit for 6" (152) I.D. 6.6" (168) O.D. tube	8 (3.5)
9823	Kit for 4.1" (104) I.D. 4.5" (114) O.D. tube	6 (2.7)
C4007	I.D. 4" (102) 7' (2.13m)	19 (8.62)
C4009	I.D. 4" (102) 9' (2.75m)	22 (9.98)
C4011	I.D. 4" (102) 11' (3.35m)	26 (11.79)
C4013	I.D. 4" (102)13' (3.96m)	29 (13.15)
C4017	I.D. 4" (102) 17' (5.18m)	36 (16.33)
C4020	I.D. 4" (102) 20' (6.08m)	40 (18.15)
CONTAINER KITS		
C4000	Kit w/o Lock I.D. 4" (102)	6 (2.72)
C4000L	Kit w/ Lock I.D. 4" (102)	9 (4.08)

RESCUE HOOK, STATIC DISCHARGE STICK

Insulated Rescue Hook

Salisbury Insulated Rescue Hook is an invaluable tool for any workplace used to withdraw an injured worker out of a hazardous area. Confined spaces, in vaults, or just near electrical cabinets and switch gear are some of the places where this tool is a must. Featuring a foam filled, fiberglass reinforced handle for superior electrical insulation and a coated heat treated body hook with an 18" opening. The stick is available in the standard lengths of 6 and 8-foot lengths. Other lengths are available as a special order. Contact us with your requirements. Handle meets the requirements of ASTM F711.

The Static discharge Stick is designed to safely remove the static charge after de-energizing. This tool is pre-assembled and includes a copper "U" hook, 3'6" closed cell foam filled tubular fiberglass stick and 6' of copper grounding cable attached to a Salisbury 1814 bronze flat jaw serrated grade 3 clamp. Also available in a 1' length stick.

Static Discharge Stick
w/ Universal Attachment

Static Discharge Stick

WaRnIng:
Discharge sticks are not grounding tools as described by OSHA 1910.269 and carry no fault duty rating.

Cat. No.	Dimensions in. mm	Weight ea. lbs.	kgs
INSULATED RESCUE HOOK			
24400	Rescue Hook 3' (0.9 m) length	3.4	(1.5)
24401	Rescue Hook 6' (1.8 m) length	4.5	(2)
24403	Rescue Hook 8' (2.4 m) length	5.5	(2.5)
STATIC DISCHARGE STICK			
20817	Static Discharge Stick OAL 3'8" (1.08m) length	8	(3.6)
22629	Static Discharge Stick w/ Universal Attachment 1' (0.3m) length	.38	(0.17)

a discharge Hook is used to drain capacitive voltage. The probe is first used to make contact, then the hook can be used to make direct contact bypassing the fuse. The fuse gives added protection in case initial contact is accidentally made on energized equipment. Fuse is rated at 8 kV maximum, 6 amperes continuous.

A **discharge Hook** is a special discharging device used to de-energize capacitors and other voltage retaining components before maintenance work is performed. Mounting clip (Cat. No. 1925MC) is included. Standard handle length is 2 feet (0.61 m). Other cable and handle lengths are available.

Resistive discharge Hooks/Probes with resistors help eliminate initial surge current. Second hook bypasses resistors for residual discharge. Resistive discharge hooks and probes use #6 flexible copper, clear-jacketed cable, a hand guard, hook or probe, and a 1" (2.5 cm) diameter fiberglass insulating handle. The handle complies with ASTM F-711. All come with a clear PVC cover to protect resistors from damage from bumps and knocks. Not all resistors fit all hooks. Please note resistor's outside diameter and length. Mounting clip (Cat. No. 1925MC) is included. Other lengths and configurations are available.

FOR DISCHARGE ONLY. DO NOT USE AS LIVE LINE TOOL OR GROUNDING DEVICE.

1930535415Q

Cat. No.	Description		Weight ea. lbs.	(kgs)
FUSED DISCHARGE HOOK				
1930535415Q	Fused Discharge Hook		10	(4.53)
DISCHARGE HOOK	**Ground Lead Length**			
1925	5' (1.52 m)		2	(0.91)
19257	7' (2.13 m)		2.5	(1.13)
19258	8' (2.44 m)		3	(1.36)
192510	10' (3.05 m)		4.5	(2.04)
192520	20' (6.10 m)		5	(2.27)
RESISTIVE DISCHARGE HOOK/PROBES				
	Handle Length	**Ground Lead Length**		
19250005	23" (0.58 m)	5' (1.52 m)	2	(0.91)
192500655	7' (2.13 m)	10' (3.05 m)	4.5	(2.04)
19250007	5' (1.52 m)	7' (2.13 m)	4	(1.81)
ACCESSORIES				
1925SSMC	Mounting Clip, Stainless Steel		3 oz	(84 g)
1925MC	Mounting Clip		3 oz	(84 g)
1925DMC	Mounting Clip with Hardware		4 oz	(112 g)

Tool Heads *are used in live line applications. This equipment should be mounted on suitable handles to ensure proper distance from live conductors. Below are the choices of end fittings available. All tools have one of these three fittings.*

QUICK CHANGE END FITTING

Has a 5/8"-11 threaded stud that threads into the top of a hexagonal ferrule. A hexagonal collar slides down and over the hexagonal ferrule making a strong, positive connection. A plastic safety clip is used to lock the quick change end fitting to an insulating handle.

UNIVERSAL END FITTING

Gives the user the option to position and secure an universal tool head at several angles. It also allows meters to be attached to universal handles. Universal fittings can be installed on universal sticks by using the 2500 shotgun adapter.

GRIP ALL or EYE SCREW END FITTING

For use with the clamp stick. The hook from the clamp stick is hooked through the eye hole of the eye screw, then drawn into the clamp stick and secured.

Safety Clip for Quick Change
Locks a quick change tool head to handle.
320E .1 oz (3 g)

Convertible Adapter
3401Q Changes QC to U 1 lbs. (0.45 kgs)
3401TS Thumb Screw Only 1 lbs. (0.45 kgs)

Convertible Adapter
2500 Shotgun Adaptor .4 lbs (.2 kgs)

Convertible Adapter
5/8" - 11 Internal Thread
3403 Changes QC to U 3 oz (93 g)

Convertible Adapter
3402Q Changes QC to GA 8 oz (224 g)

Convertible Adapter
3402U Changes GA to U 6 oz (168 g)

Cotter Key Installer
3500 1 lbs. (0.45 kgs)
Add suffix "U" for Universal, "Q" for Quick Change

Cotter Key Remover
11 Remover 12 oz (0.38 kgs)
1101 Spring Loaded Remover 12 oz (0.38 kgs)
Add suffix "U" for Universal, "Q" for Quick Change

Switch Disconnect w/ Hammer Head
1900U .19 lbs. (.08 kgs)

Ratchet Wrench
4115 1/2" (12.7 mm) sq. drive
.5 lbs (.22 kgs)

Screwdriver
13 Screwdriver 8 oz (0.23 kgs)
Add suffix "U" for Universal, "Q" for Quick Change

Hammer
165 1 lbs. (0.45 kgs)
Add suffix "U" for Universal, "Q" for Quick Change

GA Adapter w/ Square Drive & Spring-Loaded Socket
3402L5934 1/2" (1.3 cm) Square Drive
3/4" (1.9 cm) Socket
2 lbs (0.91 kgs)

Locating Drift
Use where aligning or hardware fitting is difficult.
8A 2 lbs. (.91 kgs)
Add suffix "U" for Universal, "Q" for Quick Change

Wrench Attachment
9 2 lbs. (0.91 kgs)
Add suffix "U" for Universal, "Q" for Quick Change

Flex Head Socket Wrench
4114 1.2 lbs (.5 kgs)

Toggle & Spring
The 1/2" (1.3 cm) square drive converts handles into a socket stick.
5900 2 lbs. (0.91 kgs)
Add suffix "U" for Universal, "Q" for Quick Change

Handle Splice Joint & Spring
Splices two handles together creating a flexible handle.
3302 2 lbs (0.91 kgs)
Add suffix "U" for Universal, "Q" for Quick Change

Quick Change Handle Splice Joint
3301 2 lbs (0.91 kgs)

Bayonet Ferrule
Installs/removes ground heads with bayonet studs.
98B 1 lbs. (0.45 kgs)
Add suffix "U" for Universal, "Q" for Quick Change

Hanging Hook
Attaches to all fiberglass handles.
190HC 3 oz. (84 kgs)

Clamp Stick Head
9834 Clamp Stick Head 1.4 lbs (.6 kgs)

Universal System Tool Blanket Pin
UST 1 lb. (.45 kgs)

Adjustable Insulator Fork
8300 2 lbs. (0.91 kgs)
Add suffix "U" for Universal, "Q" for Quick Change

Insulator Fork
Used in handling ball and socket insulators.
8301 2 lbs. (0.91 kgs)
Add suffix "U" for Universal, "Q" for Quick Change

Inspection Mirror
9900 5" (12.7 cm) dia. 8 oz. (224 g)
Add suffix "U" for Universal, "Q" for Quick Change

Pin Holder for Clevis-Type Insulators
2900 1 lbs. (0.45 kgs)
Add suffix "U" for Universal, "Q" for Quick Change

Line Hose Applicator
2" x 18" (5.1 x 45.7 cm) jaws
1680 4 lbs (1.81 kgs)
Add suffix "U" for Universal, "Q" for Quick Change

Extension Offset Switch Hook
Safely removes fuses from outdoor disconnects.
190001 Steel 1 lbs. (0.45 kgs)
190002 Aluminum/Bronze 1 lbs. (0.45 kgs)
Add suffix "U" for Universal, "Q" for Quick Change

Dead End Automatic Sleeve Applicator
Dia. 1/4" to 1 1/2" (6.4 to 38 mm)
16 2 lbs. (0.91 kgs)
Add suffix "U" for Universal, "Q" for Quick Change

Wire Grip
Grips conductor, has hole for block or line hook.
WWL for grip is 1,000 lbs (454 kgs) at a 4:1 ratio.
3600 Opening min.5/16" max.7/8" 2 lbs (0.91 kgs)
(7.9mm, 2.2cm)
3601 Opening min.1/2" max.1-1/2" 3 lbs. (1.36 kgs)
(1.3cm, 3.8cm)
Add suffix "U" for Universal, "Q" for Quick Change

Pig Tail
5C2 7/8" (2.2cm) opening 1 lbs. (.45 kgs)
5C3 1-1/2" (3.8cm) opening 2 lbs. (.91 kgs)
5C4 2" (5.1cm) opening 2 lbs. (.91 kgs)
Add suffix "U" for Universal, "Q" for Quick Change

Tree / Wire Hook
4236 .36 lbs. (.2kgs)

Pig Tail Disconnect
9878 .4 lbs (.2 kgs)

Switch Hook
190 8 oz. (0.25 kgs)
Add suffix "U" for Universal, "Q" for Quick Change

Light Duty Cutout Prong
9971 .4 lbs (.2 kgs)

Heavy Duty Disconnect Head
9969 .6 lbs (.3 kgs)

Prong Disconnect
9970 .4 lbs (.2 kgs)

Rotary Prong Tie Head
4099 .6 lbs (.27 kgs)

Chuck Blank
Inside Depth: 1/2" x 1 1/2" (13 x 38mm)
9838 .4 lbs (.2 kgs)

Alligator
4D Alligator 1 lbs. (0.45 kgs)
Add suffix "U" for Universal, "Q" for Quick Change

Pointed Disconnect
9839 .4 lbs (.2 kgs)

Double Prong Tie Head
4101 .5 lbs (.22 kgs)

Mechanical Hand
1C 1 lbs. (0.45 kgs)
Add suffix "U" for Universal, "Q" for Quick Change

4108 Tubular Line Cleaner 1.3 lbs (.6 kgs)
4109 Replacement Brush .5 lbs (.22 kgs)

4111 "V" Line Cleaner 1.3 lbs (.6 kgs)
4113 Replacement Brushes (10) 3 lbs (1.4 kgs)

152 "V" Brush 1.5 lbs. (0.68 kgs)
Add suffix "Q" for Quick Change, "GA" for Grip All
152B Replacement Brush 3 ozs. (0.09 kgs)

1521 Semi-Tube Brush 1.5 lbs. (0.68 kgs)
Add suffix "U" for Universal, "Q" for Quick Change, "GA" for Grip All
1521B Replacement Brush 12 ozs. (0.37 kgs)

1521003 Semi-Tube Side Brush 1.5 lbs. (0.68 kgs)
Add suffix "U" for Universal, "Q" for Quick Change, "GA" for Grip All

1520010GAH Brush w/ Handle & Cover 1 lbs. (0.45 kgs)

4103 Handle for Pruning Saw .5 lbs (.22 kgs)

7991 Pruning Saw w/ 14" (35.6 cm) 1 lbs. (0.45 kgs)
7991WS Saw Sheath .5 lbs. (0.22 kgs)
Add suffix "U" for Universal, "Q" for Quick Change

4104 Pruning Saw w/ 18"(457mm) blade .5 lbs (.22 kgs)

Mounted on 12" (30.6cm) fiberglass pole
4105 Tree Pruner - Universal
25' (7.62m) of line 4 lbs. (1.81 kgs)

7992FGQ Tree Pruner - Quick Change
12' (3.06m) of line 4 lbs. (1.81 kgs)

4102 Fixed Blade Tie Head .5 lbs (.22 kgs)

4106 Curved Blade Skinning Knife .4 lbs (.2 kgs)
4107 Replacement Blade .1 lbs (.05 kgs)

12 Stripping Knife 1 lbs. (0.45 kgs)
12S Sheath 4 oz. (0.12 kgs)
Add suffix "U" for Universal, "Q" for Quick Change, "GA" for Grip All

4100 Rotary Blade Tie Head .7 lbs (.3 kgs)

Wire Gauges
860002 Aluminum Fits:#4 to 397.5 1 lbs. (0.45 kgs)
860004 ACSR/Aluminum Fits: #4 to .556 1 lbs. (0.45 kgs)
860005 Copper Fits: #8 to 4/0 1 lbs. (0.45 kgs)
Add suffix "U" for Universal, "Q" for Quick Change

Test Point Cap Seal Cleaner
1520006 1lbs. (0.45 kgs)
Add suffix "U" for Universal, "Q" for Quick Change, "GA" for Grip All

Cat. No.	Description	Weight lbs. (kgs)
ARMOR ROD TOOLS		
124	Armor Rod Applicators	2 (0.91)
1241	Formed Wire Tools	2 (0.91)

Add suffix "Q" for quick change, "U" for universal, "HDQ" for heavy duty w/ quick change, "HDU" for heavy duty w/ universal.

The **Jumper Heads** have a maximum opening of 19/16" (4.0 cm) and are designed with built-in universal joints in order to accommodate installation lines at an angle. The jumper heads have a quick action tightening screw for fast closing. Threaded adapters are used to accept 5/8-11 threaded non-shrouded ferrules. A hose clamp is included for connection strain relief.

Cat. No.	Description	Max. Opening	Continuous Duty	Weight lbs. (kgs)
JUMPER HEADS WITH THREADED ADAPTERS				
98SADGA	Grip All Wide Jaw	1-9/16"	600 amps	3 (1.36)

Use the **Penta Socket** to tighten or loosen special 3/4" (19 mm) penta head sockets. Comes with a "T" handle. Can be used with any 1/2" (13 mm) drive wrench.

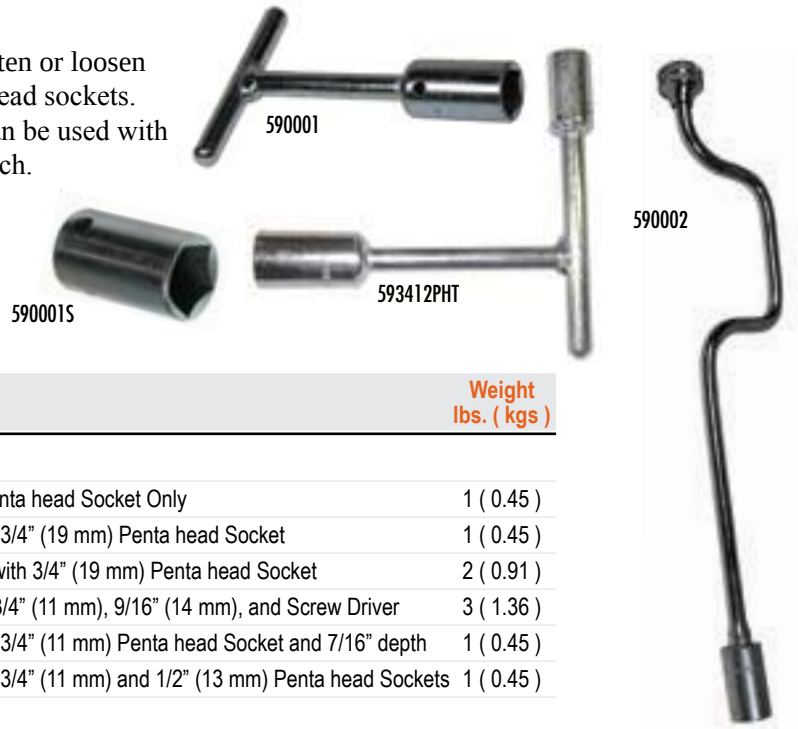

Cat. No.	Description	Weight lbs. (kgs)
PENTA SOCKET		
590001S	3/4" (19 mm) Penta head Socket Only	1 (0.45)
590001	"T" Wrench with 3/4" (19 mm) Penta head Socket	1 (0.45)
590002	Speed Wrench with 3/4" (19 mm) Penta head Socket	2 (0.91)
59P34916SD	Penta Wrench, 3/4" (11 mm), 9/16" (14 mm), and Screw Driver	3 (1.36)
5900017/16T	"T" Wrench with 3/4" (11 mm) Penta head Socket and 7/16" depth	1 (0.45)
593412PHT	"T" Wrench with 3/4" (11 mm) and 1/2" (13 mm) Penta head Sockets	1 (0.45)

The standard **Fuse Puller** heads (Cat.No. 92Q) have plastic jaws that fit fuses from 3/4" (1.9 cm) to 2" (5.1 cm) diameter. Heads are pivotally mounted to permit adjustment to any angle. To tighten the jaws, just rotate the handle. The insert jaws (Cat. No. 190NLF) for the 1-3/16" (2.1 cm) diameter liquid filled fuse are held on the fuse puller with springs. The attachment on the end of each fuse puller is Cat. No. 190Q, quick change switch hook. Other lengths available. Bag not included. Fiberglass handle diameter: 1-1/4" (3.2cm).

92Q

190Q

190NLF

9209Q

92225001Q

Cat. No.	Description	Handle Length	Weight lbs. (kgs)
FUSE PULLER TOOL			
196FGQ	Quick Change	6'6" (1.98 m)	5 (2.27)
196FGU	Universal	6'6" (1.98 m)	5 (2.27)
198FGQ	Quick Change	8' (2.43 m)	6 (2.72)
198FGU	Universal	8' (2.43 m)	6 (2.72)
Parts			
92Q	Head Only, Quick Change		2 (0.91)
92U	Head Only, Universal		2 (0.91)
190Q	Switch Hook, Quick Change		1 (0.45)
190NLF	Insert Jaws for 13/16" (2.1 cm) diameter S & C Liquid Fuse		1 (0.45)

Cat. No.	Description	Maximum Diameter	Weight lbs. (kgs)
FUSE PULLER HEADS			
9209Q	Liquid Fuse, Quick Change	13/16" (2.1 cm)	3 (1.36)
9209U	Liquid Fuse, Universal, Head Only	13/16" (2.1 cm)	3 (1.36)
9209GA	Liquid Fuse, Grip All	13/16" (2.1 cm)	3 (1.36)
92225001Q	Quick Change	2 1/4" (5.7 cm)	3 (1.36)
92225001U	Universal	2 1/4" (5.7 cm)	3 (1.36)
92225001GA	Grip All	2 1/4" (5.7 cm)	3 (1.36)

The **Parallel groove Clamp Tool** accommodates cap-screw type parallel groove clamps (one, two, and three bolt types). The parallel groove tool head clamps can be installed from almost any angle by use of the universal ball clamp. The handles are fiberglass, with the operating handle having a diameter of 1" (2.5 cm) and the stationary handle 1-1/4" (3.2 cm). Bag not included. Other lengths available.

The **vise Type Connector Tool** installs and removes all sizes of single bolt vise type connectors on energized lines. With this tool it is possible to install connectors on a line as efficiently as when done by hand. The handles are fiberglass. The operating handle is 1" (2.5 cm) in diameter and the stationary handle is 1-1/4" (3.2 cm) in diameter. Bag not included. Other lengths available.
Order operating sticks separate.

Cat. No.	Description	Weight lbs. (kgs)
PARALLEL GROOVE CLAMP TOOL HEAD		
1800CQ	Quick Change Head	3 (1.96)
1800CU	Universal Head	3 (1.96)
1800CQS	Quick Change Head with Top Hook	3 (1.96)
PARALLEL GROOVE CLAMP TOOL SOCKET		
1800SS	9/16" (1.4 cm)	1 (0.45)
1800SM	3/4" (1.9 cm)	1 (0.45)
1800SL	15/16" (2.4 cm)	1 (0.45)
CONNECTOR TOOL VISE TYPE HEAD		
72CQ	Quick Change Head Only	3 (1.96)
72CU	Universal Head Only	3 (1.96)
CONNECTOR TOOL VISE TYPE		
72S3/8	3/8" (0.95 cm)	2 oz. (45 g)
72S9/16	9/16" (1.4 cm)	2 oz. (45 g)
72S3/4	3/4" (1.9 cm)	2 oz. (45 g)

All **Insulated adjustable Wrenches** have a spring to prevent the jaws from accidentally moving while in use. These wrenches have a 12” (30.5 cm) wrench head and are supplied with a 1-1/4” (3.2 cm) diameter fiberglass handle.

Insulated Ratchet Wrench comes with a 1-1/2” (3.2 cm) fiberglass handle. Standard 1/2” (1.3 cm) square drive.

The **Insulated Ratchet Wrench for Clamp Top** has an 1-1/4” (3.2 cm) diameter fiberglass handle with eye on end for use with a clamp top tool (Cat. Nos. 44CQ or 44CU).

The **Toggle Handle** is used to convert any double threaded ferrule stick to a toggle handle for torquing requirements.

1258HEQ

44CFG

1161

Cat. No.	Handle Length	Weight lbs. (kgs)
INSULATED ADJUSTABLE WRENCH		
1160	12” (30.5 cm)	1 (0.45)
1161	18” (45.7 cm)	2 (0.91)
1162	24” (61.0 cm)	3 (1.36)
INSULATED RATCHET WRENCH		
4412	12” (30.5 cm)	2 (0.91)
4418	18” (45.7 cm)	3 (1.36)
4436	36” (91.5 cm)	4.5 (2.0)
INSULATED RATCHET WRENCH FOR CLAMP TOP		
44CFG	8” (20.3 cm)	2 (0.91)
TOGGLE HANDLE		
1258HEQ	Quick Change - 8” (20.3 cm)	1 (0.45)

live line lever Cutters are compound shear cutter made from a heat-treated alloy steel. The stationary handle is 1-1/2" (3.8 cm) in diameter and the operating handle is 1" (2.5 cm) in diameter. For cutting tie wires, jumper taps and conductors up to 2/0. Larger wires should be cut with ACSR lever cutters.
Bags available. NOT FOR USE ON ACSR.

The **all aluminum & Soft Copper Cutter** cutting head is adapted to fiberglass handles for live line work on underground and overhead conductors. For use on aluminum up to 750 kcmil and copper to 500 kcmil. Bags available. NOT FOR USE ON ACSR OR STEEL.

aCSR Cutters with Permanent Heads cut ACSR up to 396 kcmil. The cutting head is permanently attached.Bags available.

The **Soft Cable Cutter with Removable Head** is lightweight, rugged, and strong. The two-handed cutter head gives clean, shearing cuts. Bags available. NOT FOR USE ON ACSR OR STEEL.

3008FG

Cat. No.	Description	Weight lbs. (kgs)
LIVE LINE LEVER CUTTERS		
3004FG	4' (1.22 m)	11 (4.99)
3006FG	6' (1.83 m)	11 (4.99)
3008FG	8' (2.44 m)	11 (4.99)
ALL ALUMINUM & SOFT COPPER CUTTERS		
670	24" (61.0 cm)	5 (2.27)
671	30" (76.2 cm)	6 (2.72)
672	36" (91.4 cm)	7 (3.18)
ACSR CUTTERS WITH PERMANENT HEADS		
67124ACFG	24" (61.0 cm) 28" (71.1 cm)	5 (2.27)
67130ACFG	30" (76.2 cm) 34" (86.4 cm)	5 (2.27)
67136ACFG	36" (91.4 cm) 40" (102.0 cm)	6 (2.72)

Cat. No.	Maximum Cable Size			Handle Length	Weight lbs. (kgs)
	Copper Power	Aluminum Power	Communication		
SOFT CABLE CUTTER WITH REMOVABLE HEAD					
670001	500 kcmil	750 kcmil 1	3/8" (3.5 cm)	24" (61.0 cm)	5 (2.27)
6700011	750 kcmil	1200 kcmil	1 3/4" (4.5 cm)	24" (61.0 cm)	6 (2.72)
671001	500 kcmil	750 kcmil	1 3/8" (3.5 cm)	30" (76.2 cm)	5 (2.27)
6710011	750 kcmil	1200 kcmil	1 3/4" (4.5 cm)	30" (76.2 cm)	7 (3.18)

TRANSFORMER GIN ASSEMBLY & TOOL FRAME

Transformer gin assemblies are designed to lift transformers, cross arms and other items used in pole construction. Assembly consists of a pole with ferrules, top fitting, center fitting, base fitting and protective bag for the pole. Has a balanced or *unbalanced safe working load limit of 2,500 lbs. (1,134 kgs), at a minimum of 18" apart. The working load limit (WLL) is the total load on the gin assembly including load to be lifted, pull on fall line and friction. Rope and block assembly not included.

WARNING: TAGGING LOADS WORKING LOAD LIMIT SUBJECT GIN TO SIDE LOADING THAT WILL REDUCE WLL.

The **Tool Frame** is a convenient place to hang tools when they are not in use, has swivel eye allowing the frame to rotate.

The **Rope-Snibbing bracket** attaches to the pole and provides a safe place to tie lines or hook blocks when handling loads.

Cat. No.	Description	Weight lbs. (kgs)	WLL
TRANSFORMER GIN ASSEMBLY			
112	Transformer Gin Assembly	89 (40.36)	2,500 LBS
TRANSFORMER GIN ASSEMBLY			
100T	Tool Frame	1 (0.45)	
100TR	Tool Frame with Rope and Snap	2 (0.91)	
ROPE-SNUBBING BRACKET			
8200	Pole Type Bracket with Rings, Chain Length: 51" (1.30 m)	10 (4.55)	
8200S	Pole Type Bracket without Rings Chain Length: 51" (1.30 m)	10 (4.55)	

CROSS ARM GIN & TRANSFORMER GIN ASSEMBLIES

7004

Cross arm gins are used on cross arms when only one conductor needs to be raised. Use the arm gin to change insulators; apply an armor rod to a conductor; raise a conductor from a lower position to the cross arm, or lower the conductor. The 2-1/2" (6.4 cm) diameter fiberglass pole has two eyes at the top in which to hook the block line and tie back line. The base fits a 4-3/4" x 5-7/8" (12.1 x 14.9 cm) cross arm. Included shims are needed for smaller arms.

The **Transformer gin assembly** is made from steel.Can be installed on the pole by one lineman with the single alloy chain. The assembly can also be installed over a cross arm.Blocks can be installed in the eye or from the shackle provided. Rope guides for the fall line are located on both sides of the gin assembly. The gin assembly has a safe working load limit of 2,000 lbs. (907 kgs). The safe working load limit is the total load on the gin assembly including load to be lifted, pull on fall line and friction.
WARNING: TAGGING LOADS WILL SUBJECT GIN TO SIDE LOADING THAT WILL REDUCE THE WLL.

133

The **Heavy duty Transformer gin assembly** designed for easy installation on the pole with a 5/16" high test chain and tightening handle. The gin can also be installed over a cross arm. The assembly has a safe working load limit of 5,000 lbs. (2,268 kgs). The safe working load limit is the total load on the gin assembly including load to be lifted, pull on fall line and friction.
WARNING: TAGGING LOADS WILL SUBJECT GIN TO SIDE LOADING THAT WILL REDUCE THE WLL.

1200SL

Cat. No.	Length	Weight lbs. (kgs)	WLL lbs.
CROSS ARM GIN			
7003	3' (0.91 m)	12 (5.44)	600 (272)
7004	4' (1.22 m)	12 (5.44)	600 (272)
7005	5' (1.52 m)	13 (5.90)	600 (272)
TRANSFORMER GIN ASSEMBLY			
133		25 (11.34)	2,000
HEAVY DUTY TRANSFORMER GIN ASSEMBLY			
1200SL		39 (17.73)	5,000

ground Rod drivers are 60” (1.52 m) long and drives 5/8” (1.6 cm) ground rods deep by concentrating impact directly to the rod.

Light-weight and easy-to-use. Drives 1/2” (1.3 cm) ground rods with less effort than conventional methods. Discs surrounding the handle protect hands from walls, shrubbery, and the sliding parts. Measures 26” (66 cm) long with a 14” (35.6 cm) stroke.

adapters for 5/8” (1.6 cm) and 3/4” (1.9 cm) ground rods are available.

The **Framing Jack** is designed to lift the largest poles with ease and safety. The framing jack slips under a pole lying flat on the ground and raises it without danger of it toppling over. Measures 15” (38.1 cm) long.
WLL at 2:1 - 3,000 lbs. (1357 kgs)

Cat. No.	Description	Length	Weight lbs. (kgs)
GROUND ROD DRIVERS			
1350	Ground Rod Driver	60” (1.52 m)	45 (20.40)
1350001	Ground Rod Driver	26” (0.66 m)	15 (6.80)
ADAPTERS			
1350058A	For 5/8” (1.6 cm) Ground Rods		1/2 (0.21)
1350034A	For 3/4” (1.9 cm) Ground Rods		1/2 (0.21)
FRAMING JACK			
640001	Framing Jack with Ratchet Wrench		58 (26.38)
6400B	Ratchet Wrench Only		1 (0.45)

The **Temporary Transfer arm** is used to change crossarms, insulators, or poles on short spans up to and including 15 kV phase to phase. The mast (Cat. No. 1306M) is 2-1/2" in diameter by 6 feet (1.82 m) long. The horizontal arm (Cat. No. 1340WHF8) is 2-1/2" in diameter by 8 feet (2.44 m) long. The arm has a balanced load rating of 600 lbs. (272 kgs); unbalanced at 150 lbs. (68 kgs). These units are mounted to the pole using chain binders (Cat. No. 1304D) and are rated for 15 kV without insulators and 35 kV with insulators.

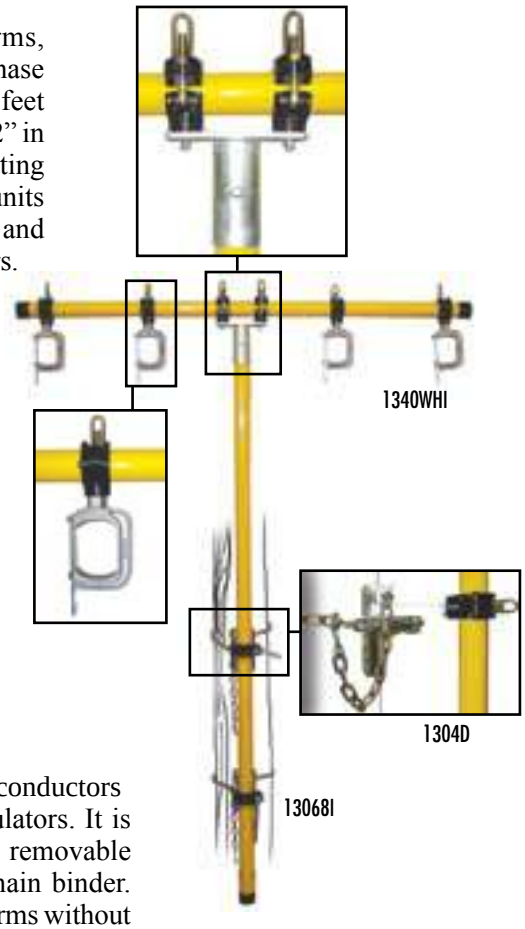

Cat. No.	Weight lbs. (kgs)
TEMPORARY TRANSFER ARMS	
With Insulators	
13068I	65 (29.48)
Without Insulators	
13068	65 (29.48)
Insulators	
1309GIB	1 (0.45)

Cat. No.	Weight lbs. (kgs)
WIRE HANGER	
With Insulators	
1300WHI	4 (1.81)
Without Insulators	
1300WH	3 (1.36)

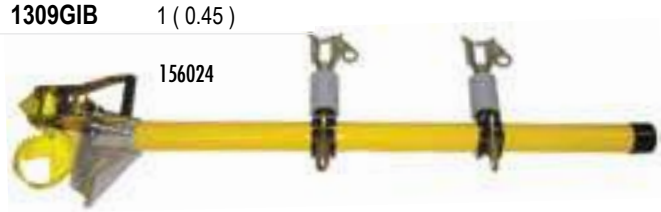

The **Temporary Side arm - Pole mounted** holds energized conductors during replacement of poles and repair or replacement of insulators. It is made of 2-1/2" (6.3 cm) diameter foam-filled fiberglass with removable and adjustable wire holders. Each arm has a strap hoist or chain binder. Specify length of arm and number of wire holders needed. Side arms without insulators are rated for 15 kV; with insulators, 35 kV. Eight foot side arm includes arm support. WLL: 4 FT (1.22 M) - 300 LBS. (136 Kgs)

Cat. No.	Number of Wire Holders	Arm Length	Weight lbs. (kgs)
TEMPORARY SIDE ARM - POLE MOUNTED			
Nylon Strap Binder with Insulators			
156024NI	2	4' (1.22 m)	17 (7.71)
Nylon Strap Binder without Insulators			
156024N	2	4' (1.22 m)	16 (7.26)

Cat. No.	Weight lbs. (kgs)
WIRE HANGER	
With Insulators	
1309DI	3 (1.36)
Without Insulators	
1309D	2.5 (1.13)

The 6 foot (1.83 m) side-mounted **Temporary Side arm - Cross arm mounted** has 2 wire holders and is used as a temporary conductor holder while replacing or repairing existing conductors or insulators. Made from 21/2" diameter foam- filled fiberglass. Both wire holders are adjustable and removable. Units without insulators are rated for 15 kV and 35 kV with insulators.
WLL: 300 LBS. (136 KGS) OR 150 LBS. (68 KGS) PER WIRE HOLDER.

Cat. No.	For Cross Arm Size	Weight lbs. (kgs)
TEMPORARY SIDE ARM - CROSS ARM MOUNTED		
With Insulators		
154466I	4 1/4" x 63/4" (10.3 x 17.1 cm)	23 (10.43)
15466I	6" x 6" (15.2 x 15.2 cm)	23 (10.43)
Without Insulators		
154466	4 1/4" x 63/4" (10.3 x 17.1 cm)	20 (9.07)
154666	6" x 6" (15.2 x 15.2 cm)	20 (9.07)

FIBERGLASS HOT CLAMPSTICKS REPAIR PARTS LIST

EXTERNAL ROD

Ref. No.	Cat. No.	Description
1	20178	Guide Assembly
2	20260	Roll Pin .125" Dia. x .5" Lg. (3.2 x 13mm)
3	20174	Ferrule
4*	20265-1	Operating Rod
5*	20381	Operating Rod Guide
6	20250	Handguard Sleeve
7	20114	Hot Stick Blank 1.25" Dia. (32mm)
8	20262	Roll Pin .125 Dia. x .56 Lg. (3.2 x 14mm)
9	20251	Operating Rod Connector
10	20258	Hex Socket Set Screw .375-16 x 1.25
11	20257	Flat Head Screw 10-32 x 1.125 Lg. (254-813 x 29)
12	20253	Adjustment Block
13	20254	Compression Spring
14	20139	Button
15	20263	Roll Pin .125 Dia. x .75 Lg. (3.2 x 19)
16	20445	10-32 Hex Jam Nut
17	20443	Hex Head Machine Screw 10-32 x 1.25
18	20140	Trigger
19	20255	Torsion Spring
20	20141	Handgrip
21	20142	Rack for Handgrip
22	20257	Flat Head Screw 10-32 x 1.125 Lg. (254-813 x 29)
23	20252	Handgrip Sleeve
24	1959	End Cap
25	20176	Jaw Hook
26	20332	Roll Pin .25 Dia. x .47 Lg. (6 x 12)
27	20470	Hook Spring
28	20177	Hook Holder

Assembly No.	Description	Consist of Parts
4317	Hook Assembly	28, 29, 30, 31

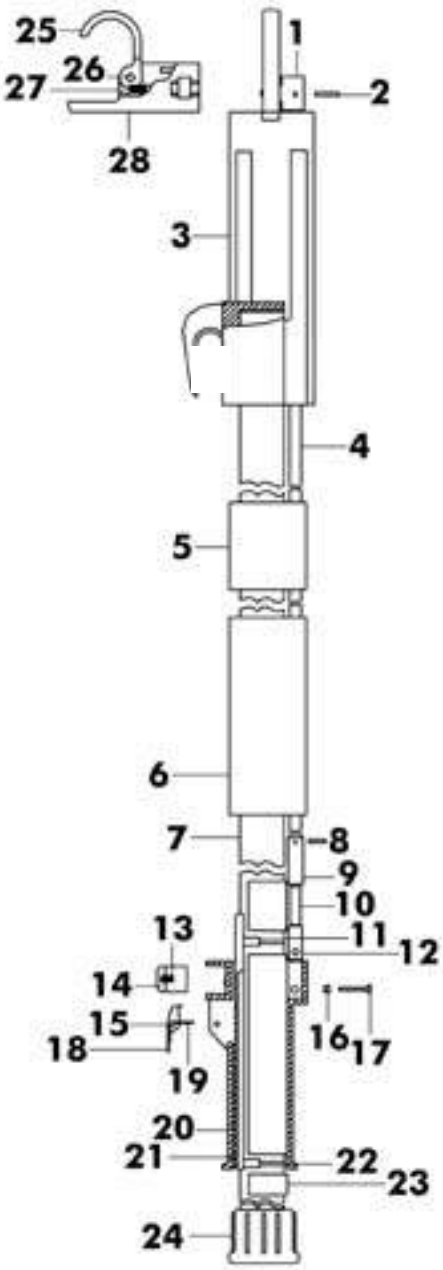

INSULATORS

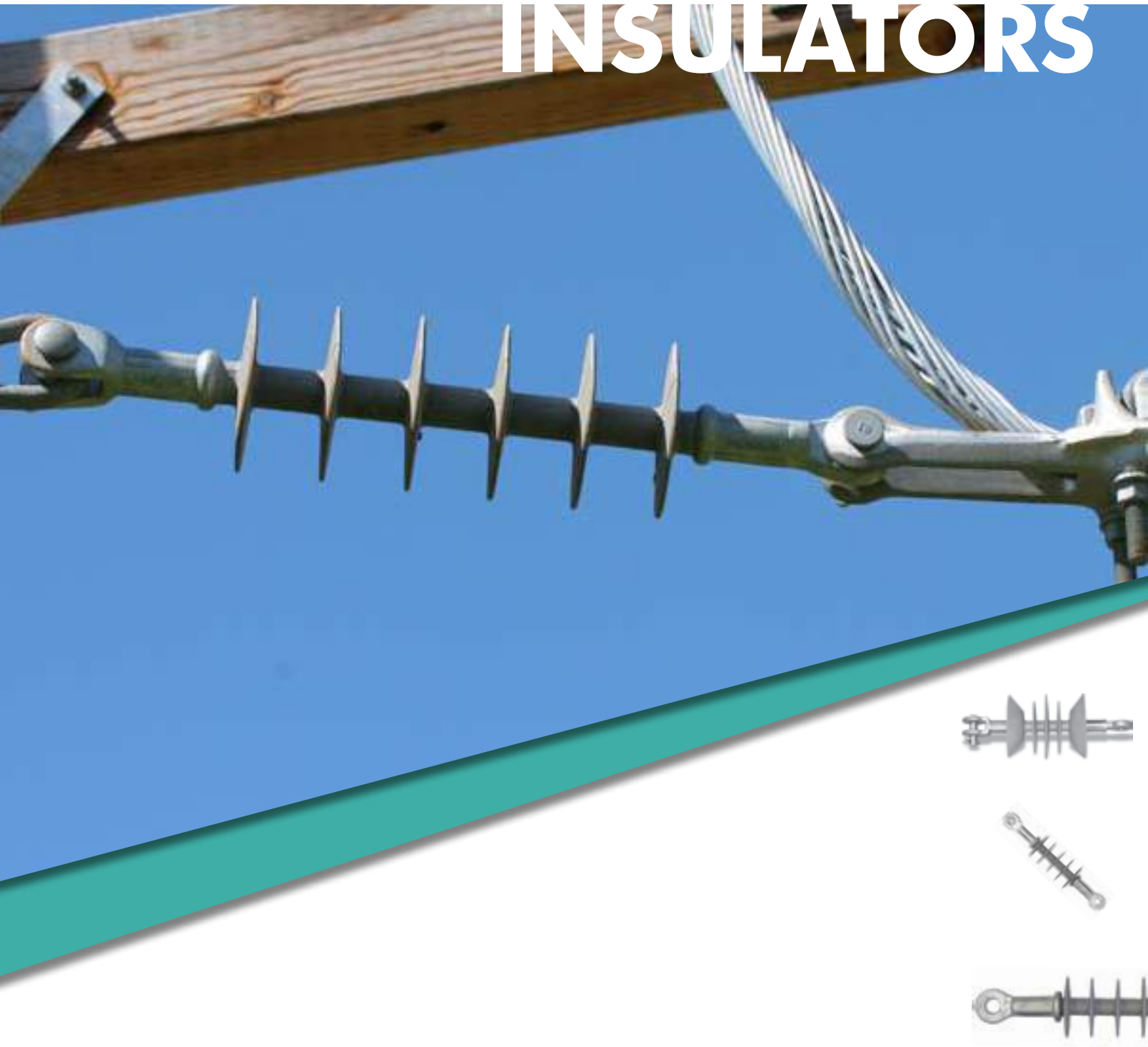

INSULATORS

NEW

IMPROVED 23613 DEAD END/SUSPENSION INSULATOR

Salisbury's Improved 23613 Dead End/Suspension Insulator has aluminum end fittings. These new end fittings create a lightweight product that is easier to handle and provides a 15,000 pound ultimate tensile strength. The new aluminum end fittings withstands corrosion better than the previous galvanized steel SI series insulators, adding to the life of the insulator. 100% proof testing ensures trouble-free installation.

The insulator was tested in accordance with ANSI C29 and IEC1109.

See page J-4 for more information.

SalvaR® & Silicone Composite Insulators combine the technologies of fiberglass reinforced rod, metal fittings and our extensive knowledge of elastomeric insulation to produce a high quality composite insulator. Since 1980 thousands of SALVAR® and Silicone Insulators have been installed by utilities worldwide in a variety of environments. Continued outstanding performance is proof of their superior quality and design.

design: Two designs are used to manufacture SALVAR® and Silicone Insulators: Unibody and Modular. Unibody Design insulators are one-piece injection molded directly to the rod and sealed to the end fittings with a bead of silicone to give the insulator high dielectric strength and protect it from all environmental conditions. This design is used for standard distribution dead end/suspension insulators.

Fiberglass Rod: A high quality fiberglass reinforced rod is the core of every insulator with ultimate mechanical strength at least twice the maximum working load.

End Fittings: Standard distribution dead/end suspension units are supplied with clevis and tongue fittings meeting ANSI C29-2 specifications. Ball, socket, and eye fittings are also available. All are made of hot dipped galvanized high strength carbon steel and have an ultimate tensile strength rating of 15,000 pounds. All end fittings on dead/end suspension insulators are attached by compression. *Every* insulator is proof tested to verify the crimp.

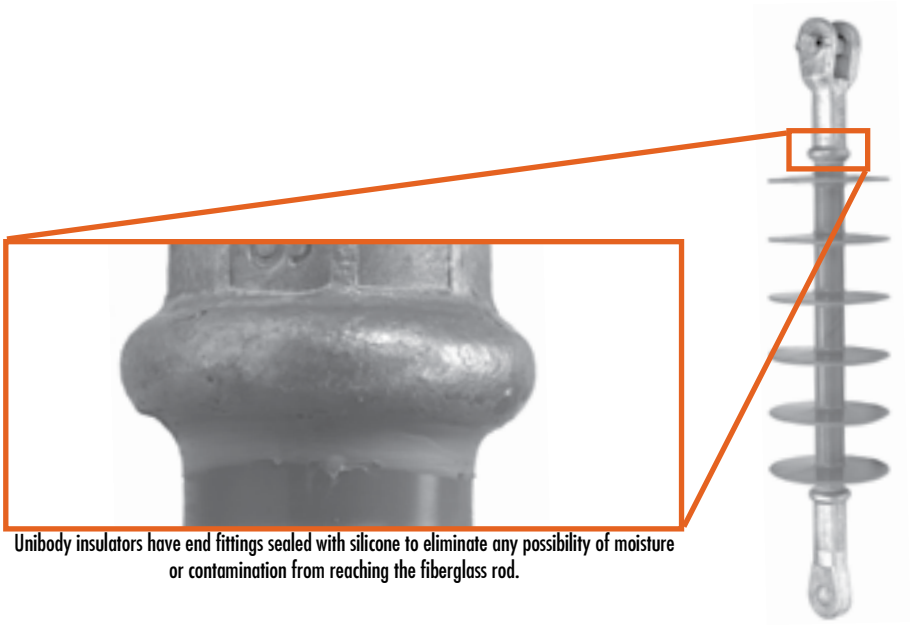

Unibody insulators have end fittings sealed with silicone to eliminate any possibility of moisture or contamination from reaching the fiberglass rod.

SI SERIES SILICONE INSULATOR & NEW ALUMINUM OPTION

15KV TO 35KV
DEAD END/SUSPENSION, TONGUE & CLEVIS

The SI Series of Silicone Insulators features a silicone formulation weathershed material. Salisbury combined the excellent hydrophobic and electrical qualities of silicone with an optimum weathershed design and corrosion resistant fiberglass rod to produce a state-of-the-art insulator which meets or exceeds industry requirements. The insulators were tested in accordance with ANSI C29 and IEC1109. End fittings are hot dipped galvanized high strength carbon steel, providing a 15,000 pound ultimate tensile strength. 100% proof testing ensures trouble-free installation. **RuS accepted.**

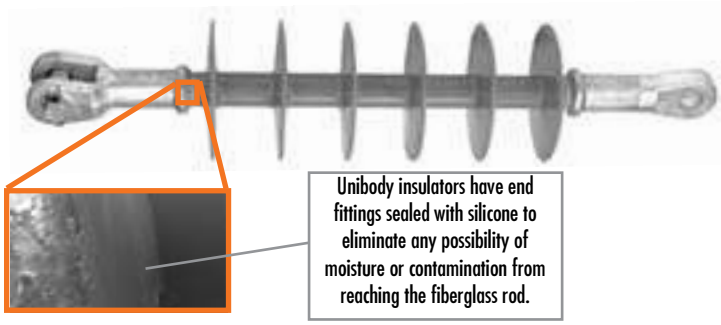

Salisbury's Improved 23613 dead End/ Suspension Insulator has aluminum end fittings. These new end fittings create a lightweight product that is easier to handle and provides a 15,000 pound ultimate tensile strength. The new aluminum end fittings withstands corrosion better than the previous galvanized steel SI series insulators, adding to the life of the insulator. 100% proof testing ensures trouble-free installation. This insulator includes the same silicone weathershed material as th SI Series.

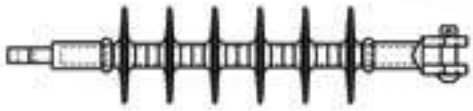

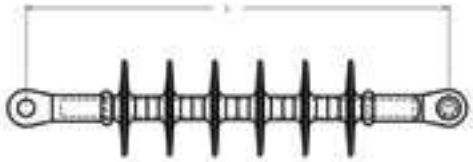

The insulator was tested in accordance with ANSI C29 and IEC1109.

		9501U-SI	9502U-SI	23613	9503U-SI
Class		DS-15	DS-28	DS-28	DS-35
No. of Weathersheds		4	6	6	8
Length–in (m)		13.5 (.34)	17.5 (.45)	17.5 (.45)	21.3 (.54)
Dia. of Weathersheds–in (mm)		3.8 (97)	3.8 (97)	3.8 (97)	3.8 (97)
Leakage Distance–in (m)		17.1 (.44)	26(.66)	26(.66)	35.1 (.89)
Dry Arc Distance–in (m)		8.4 (.22)	12.13 (.31)	12.13 (.31)	16 (.41)
Flash Over Voltage	Critical Impulse, Pos	173	217	217	258
	Critical Impulse, Neg	250	310	310	340
	Dry, 60 Hz	97	145	145	168
	Wet, 60Hz	67	115	115	137
Radio Influence	Test, kV Ground	15	25	25	25
	Max RIV–1000kHz µV	1	1	1	1uV
Ultimate Strength	lbs.	15,000	15,000	15,000	15,000
FRP Rod Dia.–in (mm)		.73 (18.63)	.73 (18.63)	.73 (18.63)	.73 (18.63)
Typ. Appl–kV, Ø-Ø		15	27	27	35
Net Weight ea.–lbs. (kgs)		2.6 (1.20)	3.1 (1.39)	2.2 (.99)	3.5 (1.57)

THE 9502L-EP SILICONE INSULATOR

27KV

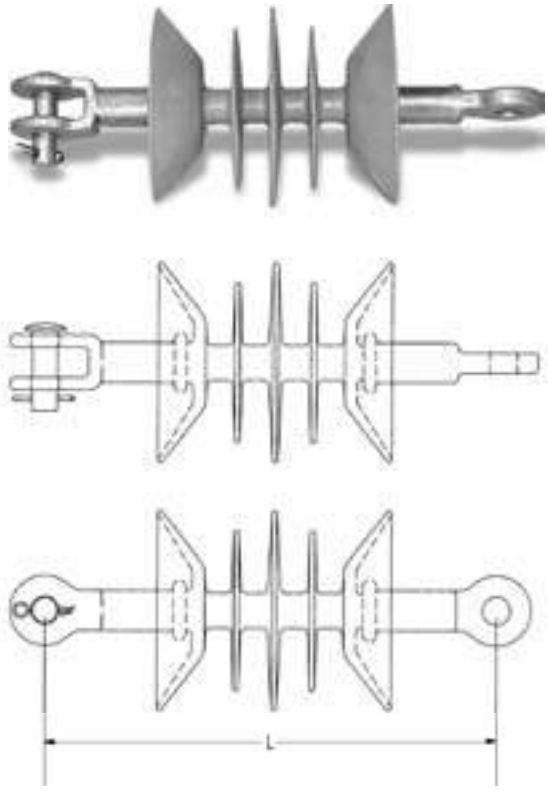

The 9502l-EP Silicone Insulator combines two essential characteristics:

PERFORmanCE - The 9502L-EP is the only composite insulator manufactured as a replacement for two 10" (254mm) porcelain disks. Installation is limited to horizontal dead-end applications only.

InnOvaTIOn - Unlike any other insulator on the market, the unique shed design of the 9502L-EP minimizes the material content without compromising electrical or dimensional requirements.

End fittings are hot dipped galvanized high strength carbon steel.

Must be used as a dead end insulator only.

RuS accepted.

		9502L-EP
No. of Weathersheds		5
Length—in (m)		11.5 (. 29)
Dia. of Weathersheds—in (mm)		5 (127)
Leakage Distance—in (m)		22 (.56)
Electrical	Critical Impulse	189
Ratings	Dry, 60 Hz	116
kV	Wet, 60 Hz	92
Radio	Test--kV Ground	20
Influence	Max RIV--1000Hz µV	1
Typ. Appl--kV, Ø-Ø		27
Ultimate Strength—SML— lbs / kN		15000 / 70
Net Weight ea.—lbs (kgs)		2.8 (1.3)

VOLTAGE DETECTORS

VOLTAGE DETECTORS

FAQ

Q: Are there any precautions, besides wearing the proper safety equipment, when using voltage detectors?

A: Do not assume conductors that have been tested de-energized will stay de-energized. Always install proper grounding devices before working. Failure to do so may result in serious injury or death.

VOLTAGE DETECTORS

SELF TESTING AUDIO / VISUAL

THE SALISBURY ADVANTAGE

Salisbury's **Self-Testing voltage detectors** allow testing to be continuous and automatic. An intermittent flash and beep confirms the detector is functioning properly.

Self-Testing voltage detectors are used to verify live or de-energized conductors. These testers may be used with rubber insulating gloves or hot sticks using the splined universal end fitting. Testers indicate the presence of voltage with an extra bright LED light and a distinctive audible signal. It is recommended that the tester be moved closer to the conductor until a warning is indicated, or it touches the conductor, apparatus, or elbow test point. Each tester requires three "C" batteries (included).

WARNING

Do not assume conductors that have been tested de-energized will stay de-energized. Always install proper grounding devices before working. Failure to do so may result in serious injury or death.

Cat. No.	Dimensions in. (mm)	Settings phase to phase	Weight ea. lbs. (kgs)
4544	11 x 3.5 (279.4 x 89)	Off / 240V / 4.2kV / 15kV/25kV/35kV/69kV/115kV/230kV	15oz. (.43)
4644	11 x 3.5 (279.4 x 89)	Off / 240V / 4.2kV /35kV/69kV/115kV/230kV/345kV/500kV	15oz. (.43)
4744	11 x 3.5 (279.4 x 89)	Off / Test-240V / Battery / URD:15kV/25kV/35kV Overhead: 4.2kV / 15kV/25kV/35kV/46kV/69kV	15oz. (.43)
4745	11 x 3.5 (279.4 x 89)	Off / Test-240V / Battery / URD:4.8kV/7.2kV/16kV Overhead: 2.4/4.2kV / 4.8/8.3kV / 8.0/13.8-7.2/12.5kV / 14.4/25-16/27.6kV / 44kV	15oz. (.43)

COMPLETE KIT

4556	1-4544 Tester 240V to 230kV, 1-21517 Case, 1-2500 Shotgun Adapter	2 (.91)
4667	1-4644 Tester 240V to 500kV, 1-21517 Case, 1-2500 Shotgun Adapter	2 (.91)
4769	1-4744 Tester 240V to 69kV, 1-21517 Case, 1-2500 Shotgun Adapter	2 (.91)

2500		Shotgun Adapter	.4 (.2)
21517	12 x 8 x 4.5 (305 x 203 x 114)	Storage Case	1 (.45)

VOLTAGE DETECTORS

AUDIO / VISUAL

voltage detectors are used to verify live or de-energized conductors. These testers may be used with rubber insulating gloves or hot sticks using the splined universal end fitting. Testers indicate the presence of voltage with an extra bright LED light and a distinctive audible signal. It is recommended that the tester be moved closer to conductor until warning is indicated, or it touches conductor, apparatus, or test point. Test the unit on a nearby energized conductor. Each tester requires three "C" batteries (included).

21517

2500

The **4445 voltage detector Tester** provides the most convenient and reliable means of verifying operation of Salisbury Voltage Detectors. The tester features instant push-button operation and requires a standard 9-volt battery (included). It's portable and lightweight. To operate, push the button and move the tester toward the voltage detector being verified. The tester generates an electric field that activates the detector verifying the audible and visual signals are operational.

4445

Test Procedures

Test Procedures

To assure unit is in operable condition switch tester into "Test-240V" position. The tester may now be tested in several different ways.

1. Place head as marked against live wire outlet or equivalent above 110V A.C.

2. Rub the head as marked on cloth or clothing to obtain static charge. Unit will only indicate intermittently.

WARNING

Do not assume conductors that have been tested de-energized will stay de-energized. Always install proper grounding devices before working. Failure to do so may result in serious injury or death.

Cat. No.	Dimensions in. (mm)	Settings phase to phase	Weight ea. lbs. (kgs)
4244	11 x 3.5 (279.4 x 89)	Off / 240V / 4.2kV / 15kV/25kV/35kV/69kV/115kV/230kV	15oz. (.43)
4344	11 x 3.5 (279.4 x 89)	Off / 240V / 4.2kV /35kV/69kV/115kV/230kV/345kV/500kV	15oz. (.43)
4444	11 x 3.5 (279.4 x 89)	Off / Test-240V / Battery / URD:15kV/25kV/35kV Overhead: 4.2kV / 15kV/25kV/35kV/46kV/69kV	15oz. (.43)

COMPLETE KIT

4356	1-4244 Tester 240V to 230kV, 1-21517 Case, 1-2500 Shotgun Adapter	2 (.91)
4367	1-4344 Tester 240V to 500kV, 1-21517 Case, 1-2500 Shotgun Adapter	2 (.91)
4469	1-4444 Tester 240V to 69kV, 1-21517 Case, 1-2500 Shotgun Adapter	2 (.91)

2500		Shotgun Adapter	.4 (.2)
21517	12 x 8 x 4.5 (305 x 203 x 114)	Storage Case	1 (.45)
4445		Voltage Detector Tester	1 (.45)

MILLER®
FALL PROTECTION

MILLER® FALL PROTECTION

Innovative Products and Services for the utilities Industry. The Miller® brand of fall protection products has been meeting market demands for fall protection equipment for over 60 years.

We have built a reputation for delivering superior quality products with exceptional customer service, enabling our customers to prevent accidents and injuries, while maintaining on-the-job effi ciencies.

Today, we take particular pride in bringing to the market innovative solutions that not only enhance safety and productivity, but increase user acceptance and lower overall cost.

PERSONAL FALL ARREST SYSTEM

KEy SySTEm COmPOnEnTS

Three key components of the Personal Fall Arrest System (PFAS) must be in place and properly used to provide maximum worker protection.

Individually these components will not provide protection from a fall. However, when used properly and in conjunction with each other, they form a Personal Fall Arrest System that becomes vitally important for safety on the job site.

BELTS, LANYARDS & LADDER

miller linemen's belts: Full-Floating belts. Full-floating belts allow for lateral movement of the D-saddle with D-rings during use. As a lineman changes position on a pole, the D-rings easily adjust to the movement. As a result, the pole strap rubs against the pole less frequently and receives less wear. Any load or pull does not bind tools to the tool loops.

all belts feature:

- Side positioning D-rings
- Leather tool loops
- Support belt rings
- Tape thong
- Accessory snap
- Accessory ring

linemen's belt Sizing

The degree of comfort a lineman receives from a belt depends on the construction of the belt and the location of the D-rings. For best fi t, order by D-size. The D-size is the distance between the heels of the D-rings. When wearing a belt, the D-rings should be located 1 inch (25 mm) in front of the hip bones. To determine proper D-size, measure across the back from hip bone to hip bone and add 2 inches (51 mm). This measurement is the D-size.

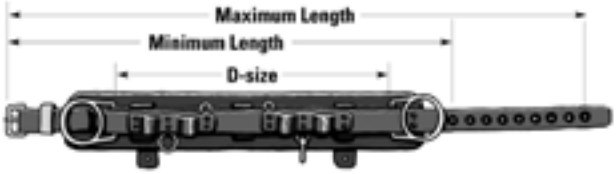

LINEMEN'S BELT SIZING CHART

D-Size	D18	D19	D20	D21	D22	D23	D24	D25	D26	D27	D28	D29	D30
Min.	32-in.	33-in.	34-in.	35-in.	36-in.	38-in.	40-in.	42-in.	44-in.	46-in.	47-in.	48-in.	49-in.
(mm)	(813)	(838)	(864)	(889)	(914)	(965)	(1,016)	(1,067)	(1,118)	(1,168)	(1,194)	(1,219)	(1,245)
Max.	42-in.	43-in.	44-in.	45-in.	46-in.	48-in.	50-in.	52-in.	54-in.	56-in.	57-in.	58-in.	59-in.
(mm)	(1,067)	(1,092)	(1,118)	(1,143)	(1,168)	(1,219)	(1,270)	(1,321)	(1,372)	(1,422)	(1,448)	(1,473)	(1,499)

Cat. No.	Width	Description	Weight ea. lbs. (kgs)
SAL88N	9-in. (229 mm)	Leather back-saver body pad with a D-saddle & 1-3/4-in. (44 mm) waist strap	5.6 (2.5)
SAL844	9 5-in. (127 mm)	"Black Beauty" leather, cushioned body pad with 1-3/4-in. (44 mm) leather D-saddle & waist strap	4.5 (2.0)
SAL88N-1	9-in. (229 mm)	Leather back-saver body pad with a D-saddle, 1-3/4-in. (44 mm) waist strap & scaffolding D-ring	5.6 (2.5)
SAL8449-1	5-in. (127 mm)	"Black Beauty" leather, cushioned body pad with 1-3/4-in. (44 mm) leather D-saddle, waist strap & scaffolding D-ring	4.5 (2.0)

SKU numbers are listed without a size. You must add the appropriate size to the end of the SKU by referencing the Linemen's Belt Sizing Chart. For models SAL88N and SAL88N-1, you must add a forward slash plus size (Ex: SAL88N/D18, SAL88N-1/D25). For models SAL8449 and SAL8449-1, you must add a forward slash plus size plus BK (Ex: SAL8449/D27BK, SAL8449-1/D24BK).

SAL9077X/12

miller bandit™ Tool lanyards. Prevent tools from dropping that can cause serious injuries on the job site. Lanyard conveniently attaches to the user's belt. Tools are attached with the carabiner or by cinching the cord around tool.

miller aerial lift Rescue ladder. The Miller Aerial Lift Self-Rescue Ladder is a portable 15-ft. (4.6 m) web ladder designed and intended to assist with self-rescue for applications such as aerial lifts, bucket trucks, and elevated work surfaces.

In the event of a fall, the user releases the ladder by pulling on the drawstring and then climbs back to the work surface.

SAL9058/15FT

miller aerial bucket Kit
The Miller Aerial Bucket Kit offers a complete personal fall arrest system for bucket truck applications.

The kit includes:
- DuraFlex® Utility Harness (SALE752/UGN)
- Manyard® II Shock-Absorbing Lanyard (SAL233M/6FTGN)
- Aerial Lift Boom Strap (SAL6404/50INYL)

SAL8112L/UGN

Cat. No.	Description
SAL9077X/12	Consists of a box of 12 Bandit Tool Lanyards
SAL9058/15FT	15-ft. (4.6 m) Self-rescue ladder
SAL8112L/UGN	Includes full-body harness, shock-absorbing lanyard & aerial lift boom strap

STOPFALL™ FALL RESTRAINT SYSTEM

The Miller StopFall System provides a user-friendly and reliable work positioning and fall arrest system for climbing wooden poles. The StopFall System is specifi cally designed with a 75-in. (1,905 mm) pole strap (maximum length) and features a 21-in. (533 mm) security strap with unique gaffs that "bite" into wooden poles. Meets CSA Standard Z259.14-99 for Type A and Type AB.

SAL7600A/YL/GP-1

■ The polyester pole strap comprises:
- An integral steel reinforcement band, which prevents "hour-glassing" and maintains shape
- A rugged neoprene wear pad for increased service life
- Double-locking snap hooks and length adjuster assembly
- Two-piece spring assembly to prevent a continual electric path
- Stainless steel dome stops to prevent the security strap from inadvertently sliding off the end of the wear pad

■ Specially-designed security strap:
- Corrosion-resistant, stainless steel hardware
- Spring-loaded gaffs that provide instant grip on wooden poles
- Nylon rollers permit free movement of the gaffs and minimize abrasion on the strap
- A disconnect and length adjuster with a "parking" feature for when the security strap is not in use

Cat. No.	Description
SAL7600A/YL/GP-1	StopFall System fi ts wood pole sizes 25-in. - 50-in. (635 mm - 1270 mm) circumference with friction buckle adjustment and attached Gaff Pullers (SAL7600GP-1) with leather screw-attachment straps
SAL7600B/YL/GP-1	StopFall System fi ts wood pole sizes 25-in. - 50-in. (635 mm - 1270 mm) circumference with tongue buckle adjustment and attached Gaff Pullers (SAL7600GP-1) with leather screw-attachment straps
SAL7600GP-1	GAFF PULLER ACCESSORY – For use on existing StopFall units Gaff Pullers with leather attachments

nF Series Safety Strap
A 1-3/4-in. (44 mm) wide, 100% nylon safety strap offers a friction buckle to adjust the length of the strap quickly and easily.

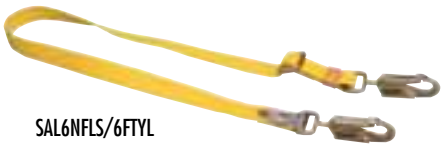
SAL6NFLS/6FTYL

yR Series Safety Strap
Strong safety strap, made of a six-ply neoprene, remains fl exible in all types of weather conditions. Tongue buckle adjuster included for quick, safe adjustment.

SAL6YRLS/6FTBR

adjustable Rope lanyard
Designed for work positioning while transitioning around obstacles.

SALARL-100-Z7/8FT

Cat. No.	Length
SAL6NFLS/6FTYL	NF Series Safety Strap 6-ft. (1.8 m)
SAL6YRLS/6FTBR	YR Series Safety Strap 6-ft. (1.8 m)
SALARL-100-Z7/8FT	Adjustable Rope Lanyard 8-ft. (2.4 m)

All Have Locking Snap Hooks – 3/4-in. (19 mm) gate opening.

MILLER REVOLUTION™ ARC-RATED HARNESS

GUARDS AGAINST ARC-FLASH & ARC-BLAST EXPOSURE

The miller Revolution arc-Rated Harness is designed to protect workers from falls caused by electric arc-fl ash and arc-blast exposure when working at heights or in confi ned space applications near energized electrical sources.

Rated to 400 lbs. (181.4 kg) Capacity.
Meets ASTM F887-05 Arc Flash Standards.

Kevlar®/nomex® miller dualT ech™ Webbing
Patent-pending 10,000 lb. tensile strength webbing is engineered with permanent fi re retardant (FR) properties. The webbing offers the durability and FR properties of Kevlar on the outer side, with softer FR Nomex on the inside of the webbing for greater comfort. The webbing assures arc protection and durability that eclipses any nylon webbing.

Leather insulators under all metal hardware offer additional protection for the worker.

Kevlar Web loop back Pad allows for a "metal-less" connection when used with a Kevlar shock-absorbing lanyard with a choke-off loop. Bright Red Pad Stitching for easy identifi cation as an arc-rated product.

SALRKNAR-QC/UBK

leather utility bag
Specialty tool bag features multiple compartments and durable, oil-tanned leather construction. Designed to attach directly to the Miller Revolution harness by simply snapping on or off.

SALRIA-T11/1

Cat. No.	Description
SALRIA-T11/1	Leather Utility Bag

Cat. No.	Size	Leg Strap Buckles	Rescue Loops	Special Features.
SALRKNAR-QC/UBK	U	Quick-Connect	No	Leather insulators / web back D-ring**26**

SKU number listed is for Universal (Lg./XL) size. Harness is also available in small/medium, XXL and XXXL, by replacing the "U" in the SKU number with "S/M", "XXL" or "XXXL" (Ex: SALRKNAR-QC/XXLBK).
Kevlar® is a registered trademark of E.I. DuPont.

Heavy-duty arc-Rated Harness

- Rugged black Kevlar® webbing for harsh welding environments
- Meets ASTM F887 Arc-Test requirements and is rated for arc exposure
- Quick-connect buckles on the chest strap for easy/fast donning
- Leather insulators
- Web back D-ring

SAL650KQC/UBK

Cat. No.	Size	Back D-Ring	Front D-Ring	Side D-Rings	Chest Strap Buckle	Shoulder Strap Buckles	Leg Strap Buckles	Sub-Pelvic Strap	Special Features
SAL650KQC/UBK	U	Yes	Option	No	Quick-Connect	Friction	Quick-Connect	Yes	Pull-up adjustment

SKU number listed is for Universal (Lg./XL) size. Harness is also available in small/medium, XXL and XXXL, by replacing the "U" in the SKU number with "S/M", "XXL" or "XXXL" (Ex: SAL650KQC/XXLBK).
For front D-ring vest-style option, add "FD" to the harness SKU number (Ex: SAL650KQCFD/UBK).

arc-Rated Shock-absorbing lanyards

- Meets stringent ASTM F887-05 arc-flash standards
- Designed to protect workers from electric arc-flash and arc-blast exposure
- Available with Kevlar choke-off loop for a "metal-less" connection

SAL933K/6FTBK

Cat. No.	Material	Style	Harness Connection	Anchorage Connection	Standard Length
SAL933K/6FTBK	Kevlar webbing	Lanyard w/SofStop shock absorber	Choke-off loop	Locking snap hook	6-ft. (1.8 m)

Meets all applicable OSHA, ANSI A10.32 and CSA requirements. Note: Locking Snap Hook – 3/4-in. (19 mm) gate opening.

arc-Rated Cross-arm anchorage Strap

- Features Kevlar webbing with 2-in. (51 mm) D-ring and choke-off loop.

SAL8185K/6FTBK

Cat. No.	Material	Style	Length
SAL8185K/6FTBK	Kevlar webbing	Cross-arm strap	6-ft. (1.8 m)

*Kevlar is a registered trademark of E.I. DuPont.

miller duraFlex utility Harnesses are uniquely designed with minimal hardware above the waist to reduce electrical conductivity. In addition, all harness materials are independently thermal-arc tested to ensure superior performance.

Patented Miller DuraFlex Harnesses feature specially-formulated elastomer webbing that stretches to maximize comfort, improve safety and increase productivity.

Rated to 400 lbs. (181.4 kg) Capacity.

Web loop lanyard attachment
- Reduces the chance of electric shock near high-voltage sources
- Minimizes harness weight for added comfort

Chest Strap with Protective Pads
- Holds shoulder straps in place
- Pads keep chest strap in place and protect user from potential shock and injury

adjustable belt loops
- Allow for attachment of linemen's belts
- Adjustable to fit most manufacturer models

Self-Rescue Positioning loops (SalE753/ugn only)
- For use with bucket escape systems
- Provides a positioning attachment point

SALE752/UGN

SALE753/UGN

Cat. No.	Size	Back D-Ring	Front D-Ring	Side D-Rings	Chest Strap Buckle	Leg Strap Buckles	Sub-Pelvic Strap	Special Features
SALE752/UGN	U	Web Loop*	No	No	Mating	Mating	Yes	Chest strap adjustment / protective pads / adjustable belt loops
SALE753/UGN	U	Web Loop*	No	No	Mating	Mating	Yes	Chest strap adjustment / protective pads / adjustable belt loops / self-rescue positioning loops

*In Canada, utility harnesses include a back D-ring extension in place of the web loop to meet CSA requirements.
SKU numbers listed are for Universal (Lg./XL) size. Harnesses are also available in small/medium, XXL and XXXL, by replacing the "U" in the SKU number with "S/M", "XXL" or "XXXL" (Ex: SALE752/XXLGN).

NON-STRETCH UTILITY HARNESS

Traditional non-stretch full-body harness in lightweight, durable, yellow polyester webbing. Rated to 400-lbs. (181.4 kg) capacity. Accommodates linemen's belts

Web loop lanyard attachment

- Reduces the chance of electric shock near high-voltage sources
- Minimizes harness weight for added comfort

SAL752/UYK

Cat. No.	Size	Back D-Ring	Front D-Ring	Side D-Rings	Chest Strap Buckle	Leg Strap Buckles	Sub-Pelvic Strap	Special Features
SAL752/UYK	U	Web Loop	No	No	Mating	Mating	Yes	Adjustable linemen's belt attachment

SKU number listed is for Universal (Lg./XL) size. Harness is also available in small/medium, XXL and XXXL, by replacing the "U" in the SKU number with "S/M", "XXL" or "XXXL" (Ex: SAL752/XXLYK).

The miller Relief Step Safety device alleviates the effects of orthostatic intolerance, also known as suspension trauma.

- OSHA states that potentially fatal suspension trauma can occur within minutes while waiting for rescue after a fall
- Average fall rescue time is 15 minutes
- When used, the Relief Step Safety Device provides support and enhances blood circulation until rescue – permitting the ability to move and flex leg muscles
- Small and lightweight; the Relief Step Safety Device attaches to any brand full-body harness
- Utilizing two (2) Relief Steps (one for each leg/foot) assures greater comfort until rescue is completed
- Low profile design eliminates hindrances or hang-ups

SAL9099X/12

Cat. No.	Description
SAL9099X/12	Consists of a box of 12 Relief Step Safety Devices

miller manyard® Shock-absorbing lanyards

- Specially-woven shock-absorbing inner core smoothly expands to reduce fall arrest forces
- After a fall occurs, a warning flag is released
- Meets ANSI Z359 requirements

SAL233TWLS-Z7/6FTGN

SAL233TWRS-Z7/6FTGN

Cat. No.	Material	Number of Legs	Harness Connection	Anchorage Connection	Standard Length
SAL233TWLS-Z7/6FTGN	Green web	One	Web choke-off loop	Locking snap hook	6-ft. (1.8 m)
SAL233TWRS-Z7/6FTGN	Green web	One	Web choke-off loop	Locking rebar hook	6-ft. (1.8 m)

Note: Locking snap hook – 3/4-in. (19 mm) gate opening. Locking rebar hook – 2-1/2-in. (64 mm) gate opening.
Meets all applicable OSHA, ANSI and CSA requirements.

TURBOLITE™ PERSONAL FALL LIMITER

Never need a shock-absorbing lanyard again! The cost-effective and competitively priced Miller TurboLite Personal Fall Limiter will make shock-absorbing lanyards obsolete on the job site. Workers will no longer need to "switch-out" equipment to maintain a safe fall distance.

- Extremely compact and lightweight provides 6-ft. (1.8 m) working capacity lifeline; unit attaches directly to the harness back D-ring for greater mobility and versatility
- Engineered webbing for greater abrasion resistance and long service life
- High-strength, impact-resistant nylon housing for maximum durability
- Built-in swivel prevents lifeline from twisting
- Rated for up to a 400 lb. (181.4 kg) user
- No annual factory recertifi cation required
- Meets ANSI Z359 requirements

SALMFL-1-Z7/6FT

Cat. No.	Description and Unit Connector	Lanyard End Connector
SALMFL-1-Z7/6FT	TurboLite with steel twist-lock carabiner	Locking snap hook

Note: Locking snap hook – 3/4-in. (19 mm) gate opening.
Meets all applicable OSHA, ANSI A10.32, ANSI Z359 and CSA requirements.

The Side Winder Retractable Web lanyard is a positioning device designed to allow linesmen to bypass obstructions safely in pole climbing applications. The length is easily adjustable up to 8-ft. (2 m) and includes a carabiner and attachment bracket for installation on linemen's belts.

SAL8327SW/8FTYL

Cat. No.	Description	Weight
SAL8327SW/8FTYL	Compact, retractable lanyard with up to 8-ft. (2 m) of polyester webbing	3.7 lbs. (1.7 kg)

Stainless steel **Wire Hook anchor** connects to various approved anchorages including railings, small I-beams, angle iron and scaffolding. Simply squeeze the spring-loaded hook and slip the large opening over the approved structure. 400-lbs. (181.4 kg) maximum capacity.

Cat. No.	Description
SAL470/	Wire Hook Anchor

miller Permanent anchorage Connector. D-Bolt Anchor for up to 4-in. (102 mm) working thickness includes a 5/8-in. (16 mm) diameter bolt with lockwasher and nut.

Cat. No.	Description
SAL416/	Permanent Anchor Connector

aerial lift boom Strap. Made of 2-in. (51 mm) nylon webbing. Includes a sliding D-ring for proper placement on booms and an adjustable buckle that easily tightens into position.

Cat. No.	Description
SAL6404/50INYL	Aerial Boom Strap

Extension Pole & Hook anchor. The 20-ft. (6 m) fi berglass pole and spring-loaded hook is ideal for use with climbing ladders and towers. Installs fall arrest systems up to 20-ft. (6 m) from ground level to angle iron, piping and related structures. 400-lbs. (181.4 kg) maximum capacity.

Cat. No.	Description
SAL475/	Pole & Hook Anchor

Steel Twist-lock Carabiner. Meets ANSI Z359. 400-lbs. (181.4 kg) maximum capacity.

Cat. No.	Description
SAL17D-1/	1" (25mm) Carabiner
SAL18D-1/	2" (51mm) Carabiner

The miller Fixed beam anchor connects horizontally to a wide range of I- and H-beam fl anges from 4-in. (102 mm) to 12-in. (305 mm) wide and up to 1-1/4-in. (32 mm) thick.

This unit is designed to be tightened horizontally or vertically, fi rmly gripping the beam or column to provide a temporary or permanent anchorage attachment.

SAL8815-12/

Cat. No.	Description	Fits Flange Sizes
SAL8815-12/	Lightweight, fi xed beam anchor stainless steel & high-strength aluminum	4-in. to 12-in. (102 mm to 305 mm)

Miller DuraHoist Portable Confined Space Systems provide safe, lightweight and portable solutions for a variety of confined space applications, including confi ned space entry, rescue, positioning and personnel/material handling.

- Lightweight, high-strength aluminum construction for easy handling and long service life
- No tools required for assembly
- Modular design allows the use of components in various configurations and applications, lowering cost of ownership and providing effective safety solutions

Floor mount Sleeve is a fi xed base for the One-piece Adjustable Mast (SALDH-3/). Mounts to horizontal concrete or steel structures.

Wall mount Sleeve is a fi xed base for the One-piece Adjustable Mast (SALDH-3/). Mounts to vertical concrete or steel structures. Compact design creates minimal intrusion into work space.

SALDH-2/

SALDH-3/

SALDH-4/

SALDH-19-MILLER

SALDH-7ZP/

SALDH-8ZP/

Cat. No.	Description	Weight
SALDH-2/	Four-piece system without ManHandler® hoist/winch	91 lbs. (41.3 kg)
SALDH-3/	One-piece Adjustable Mast: 12-in. (305 mm) to 29-in. (737 mm) offset	29 lbs. (13.2 kg)
SALDH-4/	Three-piece Portable Base, lightweight, powder-coated aluminum. Features adjustable aluminum screws and a built-in level indicator for easy set-up on uneven surfaces. No tools required for assembly.	61 lbs. (27.7 kg)
SALDH-19-MILLER	Complete bracket assembly for mounting a Miller ManHandler hoist/winch or a Miller MightEvac® SRL to the DuraHoist Portable Confi ned Space System	3.1 lbs. (1.4 kg)
SALDH-7ZP/	Zinc-plated, mild steel	13 lbs. (5.9 kg)
SALDH-8ZP/	Zinc-plated, mild steel	12 lbs. (5.4 kg)

Meets all applicable OSHA and ANSI requirements.

DURAHOIST™ PORTABLE FALL ARREST POST

The duraHoist Portable Fall arrest Post provides three independent swivel tie-off points for fall arrest anchorage. Three-stage/four-position telescoping design and aluminum construction for easy transportation and set-up. The leveling screws allow the system to be plumbed to vertical for proper working stability on inclines up to 15 degrees. Adjustable from 32.75-in (832 mm) to 57.25-in. (1,454 mm).

Fixed anchor Plate for the Portable Fall Arrest Post. Designed to be permanently welded to existing structures in locations of frequent work, or where the use of a portable base is impractical.

Rescue/material Handling davit arm attaches quickly and easily to the Portable Fall Arrest Post for rescue and material handling applications. Lightweight aluminum construction makes the Davit Arm easy to transport and set-up.

Complete adapter Plate w/bracket assembly is used to mount a ManHandler Hoist/Winch or a MightEvac SRL to the Rescue/Material Handling Davit Arm.

SALDH-AP-1/

SALDH-AP-4/

SALDH-AP-11/

SALDH-AP-3/

Cat. No.	Description	Weight
SALDH-AP-1/	Portable Fall Arrest Post	38 lbs. (17.2 kg)
SALDH-AP-4/	Fixed anchor plate with tie-off anchor	11.8 lbs. (5.4 kg)
SALDH-AP-9/	Portable I-beam anchor base	56 lbs. (25.4 kg)
SALDH-AP-3/	Rescue/Material Handling Davit Arm	20.5 lbs. (9.3 kg)
SALDH-AP-11/	Complete Adapter Plate w/Bracket Assembly	2.7 lbs. (1.2 kg)

Meets all applicable OSHA and ANSI requirements.

The **miller Confined Space and Rescue System** includes:

- 7-ft. (2 m) lightweight aluminum tripod and MightEvac mounting bracket
- Miller MightEvac Unit w/ 50-ft. (15 m) of 3/16-in. (4.8 mm) galvanized wire rope
- ManHandler Hoist/Winch with 65-ft. (20 m) of 3/16-in. (4.8 mm) galvanized wire rope
- Pulley, carabiner and two heavy-duty equipment bags
- Meets ANSI Z359 requirements

SALMR50GCM-Z7/50FT

Cat. No.	Description
SALMR50GCM-Z7/50FT	Miller Confined Space & Rescue System

Meets all applicable OSHA, ANSI and CSA requirements. For stainless steel wire rope, change the "G" to an "S" in the corresponding model number (Ex: SALMR50GCM-Z7/50FT becomes SALMR50SCM-Z7/50FT).

The **miller mightEvac® Self-Retracting lifeline w/ Emergency Retrieval Hoist** combines the superior performance and reliability of the best-selling MightyLite™ Self-Retracting Lifeline Series with a quick-activating retrieval mechanism for emergency evacuation.

- No annual factory recertifi cation required*
- 20% lighter than competitive models
- Corrosion-resistant stainless steel/aluminum housing and internal components
- Promotes quick and easy rescue with a 4:1 mechanical advantage (average speed of 25 ft. [7.6 m] per minute)

**Does not apply to Canada due to CSA Z259.2.2-98 requirements. Must be inspected by a Miller authorized service center if involved in a fall or if fails user visual or functional inspection.*

SALMR50GB-Z7/50FT

- Convenient, heavy-duty carrying handle
- 310 lb. (140.6 kg) working capacity; rated to 400 lbs. (181.4 kg) working capacity when using a SofStop shock absorber (SAL928LS/18INBK)
- For emergency evacuation only
- SALMR50GB-Z7/50FT meets ANSI Z359

Cat. No.	Description	Weight
SALMR50GB-Z7/50FT	Miller MightEvac w/50-ft. (15 m) of 3/16-in. (4.8 mm) galvanized wire rope, mounting bracket & carabiner	39 lbs. (17.7 kg)
SALMR40KB/40FT	Miller MightEvac w/40-ft. (12 m) of 3/16-in. (4.8 mm) polyester Spectra® rope, mounting bracket & carabiner	37 lbs. (16.8 kg)

Meets all applicable OSHA, ANSI and CSA requirements. Spectra is a registered trademark.

MILLER MANHANDLER® HOIST

The **miller manHandler Hoist** is the perfect solution for a range of applications including confi ned space entry, rescue, positioning and personnel/material handling.

- Compact, durable steel construction
- Smooth, controlled winding action
- Effortless lifting and lowering with a 5:1 gear ratio
- Built-in mounting bracket
- Anti-backlash crank handle braking system prevents freewheeling
- 400 lbs. (181.4 kg) working capacity
- Meets ANSI Z359 requirements

SAL8442-Z7/65FT

Cat. No.	Description	Weight
SAL8442-Z7/65FT	ANSI Z359-2007 Compliant ManHandler personnel-rated hoist w/65-ft. (20 m) of 3/16-in. (4.8 mm) galvanized steel cable	40.1 lbs. (18.2 kg)

Meets all applicable OSHA, ANSI and CSA requirements.

ACCESSORIES

ACCESSORIES

ALSO AVAILABLE

Salisbury offers an entire line of Arc Flash Protective Clothing and Equipment ranging from 8 cal/cm² to 100 cal/cm².
Ask your local Salisbury representative for a copy of our Arc Flash Protection Catalog or download it from our website at salisburybyhoneywell.com.

Salisbury also offers Salisbury Insulated Tools and Tool Kits.
These tools are all tested to 10,000 VAC for use up to 1,000 VAC. These tools meet or exceed ASTM F1505-01 and IEC 900 Standards for Insulated Hand Tools and will help you to be compliant with OSHA 1910.333 (c)(2), and NFPA 70E 2009. Ask your local Salisbury representative for more information or visit our website at salisburybyhoneywell.com.

CANVAS BUCKETS AND BAGS

40

50

30

Salisbury Tool buckets are constructed of extra-heavy-duty canvas duck and reinforced with a one-piece formed leather bottom with a 3” (76mm) cuff for rugged service and long life. The standard tool buckets, 30 and 40, are both collapsible for easy storage and feature a poly braid rope handle. The 30 features a 6” x 8” interior pocket. The oval tool bucket, 50, designed to attach to aerial baskets, features 6 inner tool pockets and two plastic hanging hooks.

Salisbury Tool bags are useful for carrying and storing all sorts of equipment and tools. Constructed for long life and rugged service from one piece of #8 natural canvas fastened to a steel frame. The vinyl coated nylon bottom is cemented and double stitched to the bag and protected with steel studs and a reinforcing 3.5” (89mm) cuff. Handles are made from a heavy polypropylene webbing and straps are made of top grain harness leather.

line Hose and blanket bags are convenient for raising and lowering bulky items up and down a pole, as well as for storage. Constructed of #6 duck, sewn with nylon thread, and reinforced with a heavy rubber bottom. Features a top ring to hold the bag open and a strong 1/2” (12.7mm) poly braid rope handle, reinforced with polymer. 8” (178mm) diameter bags are used for conventional style line hose, while the 12” (305mm) diameter bags were designed for Class 4 extended lip line hose.

Cat. No.	Dimensions in. (mm)	Weight ea. lbs. (kgs)
STANDARD TOOL BUCKETS		
30*	12 x 16 (305 x 406)	3.2 (1.45)
40*	8 x 14 (203 x 356)	2 (.91)
OVAL TOOL BUCKET		
50C*	7x14x10 (1715x356x254)	2.5 (1.14)
PH55	yellow vinyl hooks for #50	.5 (.23)
STANDARD Tool Bags- 5.5” (140mm) wide		
616	16 x 13.5 (406 x 343)	3.3 (1.5)
618	18 x 15.5 (457 x 394)	3.8 (1.73)
620	20 x 15.5 (508 x 394)	4.2 (1.91)
622	22 x 15.5 (559 x 394)	4.3 (1.95)
624	24 x 15.5 (610 x 394)	4.5 (2.04)
EXTRA WIDE Tool Bags-9.5” (241mm) wide		
2419B	24 x 19 (610 x 483)	4.1 (1.86)
LINE HOSE BAGS		
48*	8 x 48 (178 x 1219)	2.8 (1.27)
60*	8 x 60 (178 x 1524)	3.0 (1.36)
66*	8 x 66 (178 x 1676)	3.3 (1.5)
72*	8 x 72 (178 x 1829)	3.5 (1.59)
1248*	12 x 48 (305 x 1219)	3.8 (1.73)
1266*	12 x 66 (305 x 1676)	5.3 (2.41)
BLANKET BAG		
1230	12 x 30 (305 x 762)	3.2 (1.45)

*add suffix “S” if optional iron swivel snap is desired

Compound Pots are made of hard rubber that is nonconductive and breakage resistant. The applicator brush and compound are held in one unit that can be hung from aerial devices or fit into cross arm holes. Offered in single and double compartment styles.

Cable bandages provide temporary insulation for bare conductors and splices. A single thickness of the orange SALCOR® Bandage can withstand 15kV on puncture test. The black neoprene bandage is intended to provide fast and complete temporary cover for cable splicers.

Insulating Saddles are ideal for temporary or emergency line work such as stringing light conductors over short spans. The large 3" (76mm) upper saddle opening will hold bare or insulated conductors in either an upright or inverted position. The IS10 has a voltage rating of 15kV. When necessary to leave energized conductors or jumpers in the saddle for extended periods, it is recommended that they be encased in orange SALCOR® RIB-GRIP® line hose. Molded of hard rubber and furnished with two nylon holding pins supplied with steel loops for easy hot-stick application. A 12" (305mm) orange plastic shoe is affixed to the crossarm opening to help prevent flashover during inclement weather. Designed to fit crossarms with dimensions up to 3.75" x 5" (95mm x 127 mm).

PJB1

44OS

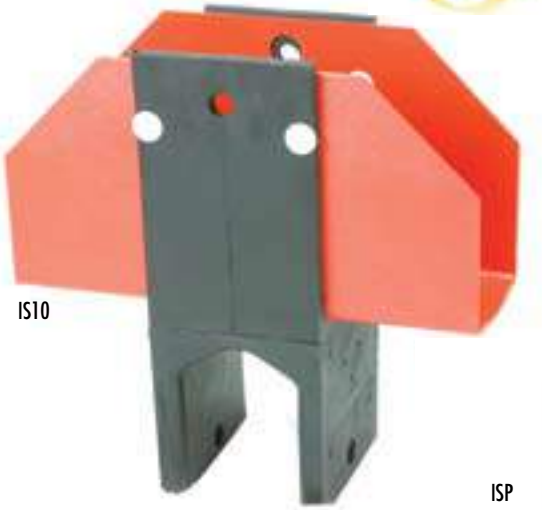

IS10

ISP

Cat. No.	Description in. (mm)		Weight ea. lbs. (kgs)
COMPOUND POT SINGLE COMPARTMENT			
PJB1	1pt. w/ bristle brush	4.5" x 3.5" (114 x 89)	1.5 (.681)
PJB2	1 pt. w/ wire brush	4.5" x 3.5 (114 x 114)	1.5 (.681)
CABLE BANDAGES			
44OS	Orange SALCOR	4' (1.2m) w/ strap	1 (.5)
414PG	Pure Gum Rubber	14' (4.3m) w/o strap	1 (.5)
414BN	Black Neoprene	14' (4.3m) w/o strap	1 (.5)
INSULATING SADDLE			
IS10	11.25 x 4.75 (286 x 121)		4 (1.8)
ISP	Replacement Pin		.25 (.1)

bElT HOOK/bREaK-aWay is nonconductive yellow nylon hand-line belt hook that will bend or break if suddenly pulled.

H7

Climber guards are manufactured by the dipping process using the same formulation of rubber as our lineman's insulating gloves and sleeves. Climber Guards are furnished un-slit to accommodate any length, regular or adjustable climbers. Sold in pairs only.

21187

Cat. No.	Description / Dimensions in. (mm)	Weight ea. lbs. (kgs)
BELT HOOK / BREAK-AWAY		
H7	Break-Away Belt Hook	1 oz. (.03)
CLIMBER GUARDS		
21187	sold in pairs	.5 (.23)

Premium all-purpose **Hand line** is a light weight and durable three-strand laid rope. Filament polyester yarns are "jacket-wrapped" over mono-filament polypro center yarns, providing excellent abrasion resistance and gripping properties with moderate elongation. When used properly, polydac is perfect for capstans, block and tacklework, and many other rough applications. Other lengths available.

42

Hand line assemblies with Polydac Rope is used for lifting objects to the lineman on the pole. Other lengths are available.

149H

Hooks are used for snatch and hand line blocks. **Steel line Hooks** designed to hug the conductor when strain is applied to rope after splicing rope into the eye. Hooks will not damage conductor or fall off, and are easily applied and removed.

40H

40HPP

40CH

40SHB

27

27A

27S

Cat. No.	Diameter in.	Diameter cm	Length ft.	Length m	Approx. Tensile Strength lbs.	Approx. Tensile Strength kgs	Weight / Reel lbs.	Weight / Reel kgs
POLYPROPYLENE AND POLYESTER (POLYDAC) ROPE								
5000E600	1/2	1.3	600	182.9	5,400	2,449	40	18.1
6250E600	5/8	1.6	600	182.9	7,200	3,266	56	25.4

Cat. No.	Description	Total Rope Length ft.	Total Rope Length m	For Pole Height lbs.	For Pole Height kgs	Weight lbs.	Weight kgs
HAND LINE ASSEMBLIES WITH POLYDAC ROPE							
1491250	Standard Hand Line, Fixed Sling	100	30.5	50	15.2	11	4.99
1492250	Standard Hand Line, Adjustable Sling	100	30.5	50	15.2	11	4.99
1492375	Standard Hand Line, Adjustable Sling	150	45.8	75	22.9	13	5.90
1494250	Alternate Hook Assembly, Adjustable Sling	100	30.5	50	15.2	11	4.99
1494375	Alternate Hook Assembly, Adjustable Sling	150	45.8	75	22.9	13	5.90
PARTS							
42	Hand Line Block (only)					2	0.91
149H	Hook for Hand Line (only)					1	0.45
149S	Swivel Snaps (only)					1	0.45

Cat. No.	Description	Opening Size in. (cm)	WLL lbs. (kgs)	Weight lbs. (kgs)
HOOKS				
40H	Pointed Hook	1,000 (454)		1 (0.45)
40HPP	Pointed Hook	1,000 (454)		1 (0.45)
40CH	Blunt Hook	1,000 (454)		1 (0.45)
40SHB	Swivel Hook	1,000 (454)		1 (0.45)
LINE HOOKS				
27	Small	7/8" (2.2 cm)	1,000 (454)	1 (0.45)
27A	Medium	1-1/2" (3.8 cm)	1,325 (601)	2 (0.91)
27S	Large	2" (5.1 cm)	1,650 (748)	3 (1.36)

blocks are made of high strength aluminum alloy except for Cat. No. 42PS which is made of high impact plastic. The hand line block has a 5/8" (1.6 cm) diameter rope maximum. "S" denotes side opening block. Other hooks are available.

40

Wood Shell blocks are used with polypropylene or synthetic rope. The 4" blocks have a 1/2" (1.3 cm) diameter rope maximum; the 5" blocks a 5/8" (1.6 cm) maximum; and the 6" blocks a 3/4" (1.9 cm) maximum.

42S

Single blocks are fitted with a swivel hook; double and triple block with a loose, flat hook. Swivel hooks are not recommended on double or triple blocks. The double and triple blocks are fitted with a special live line pin so they can easily be handled with an alligator stick (Cat. No. 4FGQ).

Cat. No.	Description	Weight lbs. (kgs)	WLL lbs. (kgs)
BLOCKS			
40	Aluminum Hand Line Block	2 (0.91)	1,000 (454)
42A	Aluminum Hand Line Block with Pointed Hook	3 (1.36)	1,000 (454)
42S	Aluminum Snatch Block	2 (0.91)	1,000 (454)
42SA	Aluminum Snatch Block with Pointed Hook	3 (1.36)	1,000 (454)
42PS	Insulated Plastic Block	3 (1.36)	1,000 (454)
WOOD SHELL BLOCKS - SINGLE BLOCK WITH SWIVEL HOOK & BECKET			
904	4" (10.2 cm)	2 (0.91)	1,000 (454)
905	5" (12.7 cm)	3 (1.36)	1,200 (544)
906	6" (15.2 cm)	5 (2.27)	1,800 (816)
WOOD SHELL BLOCKS - DOUBLE BLOCK WITH FLAT HOOK & BECKET			
284	4" (10.2 cm)	3 (1.36)	1,400 (635)
285	5" (12.7 cm)	5 (2.27)	1,800 (816)
286	6" (15.2 cm)	7 (3.17)	2,500 (1,134)
WOOD SHELL BLOCKS - DOUBLE BLOCK WITH FLAT HOOK, BECKET & SWIVEL			
284A	4" (10.2 cm)	3 (1.36)	1,400 (635)
285A	5" (12.7 cm)	5 (2.27)	1,800 (816)
286A	6" (15.2 cm)	8 (3.63)	2,500 (1,134)
WOOD SHELL BLOCKS - TRIPLE BLOCK WITH FLAT HOOK, BECKET & SWIVEL			
284A3	4" (10.2 cm)	4 (1.81)	1,800 (816)
285A3	5" (12.7 cm)	7 (3.17)	2,400 (1,089)
286A3	6" (15.2 cm)	11 (4.99)	3,200 (1,451)

nylon blocks are light-weight and self-lubricating. The nylon blocks will handle 1/2” (1.3 cm) diameter rope and smaller.
WARNING: DO NOT EXCEED THE WORKING LOAD LIMIT.

Cat. No.	Description	Weight lbs. (kgs)	WLL lbs. (kgs)
NYLON BLOCKS			
3101E	Single Block with Swivel Hook & Becket	1 (0.45)	500 (227)
3101W	Single Block with Flat Hook & Becket	1 (0.45)	500 (227)
3102W	Double Block with Flat Hook & Becket	2 (0.91)	1,000 (454)
3103W	Triple Block with Flat Hook & Becket	2 (0.91)	1,200 (544)

Cat. No.	Description	WLL lbs. (kgs)	Weight lbs. (kgs)
SAFETY HOOK			
4003SH	Conductor Lifting Hook	2,000 (907)	6.2 (2.8)

ARM SLINGS

26E

26K

Fabricated arm Slings are used as an all-purpose sling for non-energized and live line work, the fabricated arm sling is made to fit snugly over the arm by using the filler plates (included) to adjust the opening. Weight - 6 lbs. (2.7 kgs).

double arm Slings are made for dead ending. Adjustable to cross arms 4” to 5” (10.2 to 12.7 cm) wide and 5” to 6” (12.7 to 15.2 cm) high, the double arm sling can be installed with insulating sticks.Weight - 15 lbs. (6.8 kgs).

266

Cat. No.	Opening Size in. (cm)	WLL lbs. (kgs)
FABRICATED ARM SLINGS		
26E	4 x 6 (10.2 x 15.2)	2,000 (907)
26G	5 x 6 (12.7 x 15.2)	2,000 (907)
26K	6 x 6 (15.2 x 15.2)	2,000 (907)
26H	6 1/8 x 8 (15.6 x 20.3)	2,000 (907)
DOUBLE ARM SLING		
266	With 2 Steel Snatch Blocks	750 (340)

POLE ADAPTER KIT & POLE DRAW BAR

3115

The **Pole adapter Kit** is a mounting bracket that safely attaches a saw to the pole. The saw pivots on a plate which is attached to the side of the saw. The pole adapter has a chain tightening base, and a safety stop to halt the swing of the saw after the cut has been made. Use this adapter kit while cutting off sections of a pole when the pole has to be removed. Chain saw not included.

The **Pole draw bar** attaches to the pole by placing the end stop of the bar against the end of the pole. Secure the bar to the pole with the two chain and screw binders affixed to the bar. The pole draw bar is supplied with lifting handles on each side and a safety loop through which a chain is attached. The oval hole is large enough to fit all hitches. (Check local vehicle safety chain regulations.)
9300 - SAFE TOWING CAPACITY: 10,000 LBS. (4,530 Kgs).
9301 - SAFE TOWING CAPACITY: 15,000 LBS. (6,804 Kgs).

3115ES

9301

9300

Cat. No.	Type of Saw	Description	Weight lbs. (kgs)
POLE ADAPTER KIT			
3115	Stihl / Homelite	Full Adapter Kit	14 (6.35)
3115ES	Stihl / Homelite XL	Swivel Plate w/ Stand-Off	1 (0.45)

Cat. No.	Description	Weight lbs. (kgs)
POLE DRAW BAR		
9300	Pole Draw Bar (complete)	60 (27.21)
9301	Heavy Duty Pole Draw Bar	78 (35.37)
Replacement Parts		
9300C	Chain, Screw and Snap	4 (1.81)
9300E	Toggle Handle and Nut	1 (0.45)
9300M	Pointed Screw	3 oz. (84 g)

National Disaster Response Program

After Hours Emergency Customer Service

Do you know what to do in times of disaster?

Do you know who to contact in case of emergency?

You can count on Salisbury, to be there when you need it most.

Salisbury understands your safety needs. But, Salisbury also understands that your safety needs don't always happen between 9am and 5pm. This is why Salisbury has developed the National Disaster Response Emergency Contact.

Salisbury's National Disaster Response will be able to help your emergency safety product orders and customer service needs. While facing national disasters and weather related catastrophes, Salisbury will be there.

NATIONAL DISASTER RESPONSE PROGRAM : After Hours Emergency Customer Service

You can now contact Salisbury after regular business hours during severe emergencies using our new NATIONAL DISASTER RESPONSE Contact Line. This new contact line allows product ordering, even after-hours and weekends. A National Disaster Response Team is ready to fulfill your emergency order requirements around the clock during national and international severe weather or natural disasters such as Winter Ice Storms, Tornadoes, Tropical Storms, Hurricanes and Earthquakes.

Our team is ready to fulfill emergency orders of Personal Protective Equipment and Linemen Utility Products required to (1) Restore electrical power and utilities to U.S. and Global regions as a result of natural disaster and (2) provide Personal Protective Equipment to the Industrial or Utility work force resulting from natural disaster.

National Disaster Response emergency contact for after-hour and weekend emergencies as defined above.

866-957-7515

National Disaster Response After-Hours Emergency Contact

Department in Bolingbrook, IL during regular business hours:

877-406-4501

Monday - Friday 7:30AM-5:00 PM Central Standard Time

SALISBURY
by Honeywell
101 E CROSSROADS PARKWAY
SUITE A
BOLINGBROOK IL 60440 USA
TOLL FREE PH. (USA) 877.406.4501
TOLL FREE FAX (USA) 866.824.4922
630-343-3800
salisburybyhoneywell.com

FACEBOOK.COM/SALISBURYBYHONEYWELL
TWITTER.COM/SALISBURY1855

AUTHORIZED DISTRIBUTOR

SALISBURY BY HONEYWELL
© 2011 HONEYWELL INTERNATIONAL INC. ALL RIGHTS RESERVED.

10M PRINTED IN USA 2011
PART# FULLUTILITY V.090811