ASRock

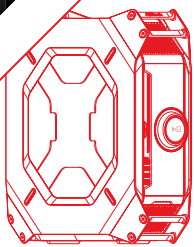

User Manual

M8

Version 1.0
Published August 2013

Copyright Notice:

Disclaimer:

Specifications and information contained in this documentation are furnished for informational use only and subject to change without notice, and should not be constructed as a commitment by ASRock. ASRock assumes no responsibility for any errors or omissions that may appear in this documentation.

With respect to the contents of this documentation, ASRock does not provide warranty of any kind, either expressed or implied, including but not limited to the implied warranties or conditions of merchantability or fitness for a particular purpose.

In no event shall ASRock, its directors, officers, employees, or agents be liable for any indirect, special, incidental, or consequential damages (including damages for loss of profits, loss of business, loss of data, interruption of business and the like), even if ASRock has been advised of the possibility of such damages arising from any defect or error in the documentation or product.

This device complies with Part 15 of the FCC Rules. Operation is subject to the following two conditions:
(1) this device may not cause harmful interference, and
(2) this device must accept any interference received, including interference that may cause undesired operation.

CALIFORNIA, USA ONLY

The Lithium battery adopted on this motherboard contains Perchlorate, a toxic substance controlled in Perchlorate Best Management Practices (BMP) regulations passed by the California Legislature. When you discard the Lithium battery in California, USA, please follow the related regulations in advance.
"Perchlorate Material-special handling may apply, see www.dtsc.ca.gov/hazardouswaste/perchlorate"

Website: http://www.asrock.com

AUSTRALIA ONLY

Our goods come with guarantees that cannot be excluded under the Australian Consumer Law. You are entitled to a replacement or refund for a major failure and compensation for any other reasonably foreseeable loss or damage caused by our goods. You are also entitled to have the goods repaired or replaced if the goods fail to be of acceptable quality and the failure does not amount to a major failure. If you require assistance please call ASRock Tel : +886-2-28965588 ext.123 (Standard International call charges apply)

The terms HDMI™ and HDMI High-Definition Multimedia Interface, and the HDMI logo are trademarks or registered trademarks of HDMI Licensing LLC in the United States and other countries.

HDMI™
HIGH-DEFINITION MULTIMEDIA INTERFACE

Important Safety Instructions

Pay close attention to the following safety instructions before performing any of the operation. Basic safety precautions should be followed to protect yourself from harm and the product from damage:

- Operation of the product should be carried out by suitably trained, qualified, and certified personnel only to avoid risk of injury from electrical shock or energy hazard.
- Disconnect the power cord from the wall outlet when installing or removing main system components, such as the motherboard and power supply unit.
- Place the system on a stable and flat surface.
- Use extreme caution when working with high-voltage components.
- When handling parts, use a grounded wrist strap designed to prevent static discharge.
- Keep the area around the system clean and clutter-free.
- Keep all components and printed circuit boards (PCBs) in their antistatic bags when not in use.
- Handle a board by its edges only; do not touch its components, peripheral chips, memory modules or contacts.

Contact Information

If you need to contact ASRock or want to know more about ASRock, you're welcome to visit ASRock's website at http://www.asrock.com; or you may contact your dealer for further information. For technical questions, please submit a support request form at http://www.asrock.com/support/tsd.asp

ASRock Incorporation

2F., No.37, Sec. 2, Jhongyang S. Rd., Beitou District,

Taipei City 112, Taiwan (R.O.C.)

ASRock EUROPE B.V.

Bijsterhuizen 3151

6604 LV Wijchen

The Netherlands

Phone: +31-24-345-44-33

Fax: +31-24-345-44-38

ASRock America, Inc.

13848 Magnolia Ave, Chino, CA91710

U.S.A.

Phone: +1-909-590-8308

Fax: +1-909-590-1026

Chapter 1 Introduction

Thank you for purchasing M8, a reliable gaming barebone system produced under ASRock's consistently stringent quality control. It delivers excellent performance with robust design conforming to ASRock's commitment to quality and endurance.

Because the hardware specifications might be updated, the content of this documentation will be subject to change without notice. In case any modifications of this documentation occur, the updated version will be available on ASRock's website without further notice. If you require technical support related to this product, please visit our website for specific information about the model you are using. ASRock website: http://www.asrock.com.

1.1 Package Contents

- M8 Barebone System with:
  M8 Chassis
  Mini-ITX Motherboard (pre-installed)
  Power Supply Unit (pre-installed)
  System Fan (pre-installed)
- AC Power Cable
- Hexagon Screwdriver
- Screwdriver Set
- Screw Package
- System Key
- VGA Support
- 6 x SATA Cable
- Support CD
- Quick Installation Guide
- User Manual

If any items are missing or appear damaged, contact your authorized dealer.

1.2 Product Specifications

Color	• Storm Black
Material	• Steel Body / Aluminum + Plastic
Dimension	• 372mm (W) x 123mm (H) x 400mm (L)
Motherboard	• ASRock Z87-M8
CPU	• Supports 4th Gen Intel® Core™ i7 / i5 / i3 / Xeon® / Pentium® / Celeron® Processor Family
Memory	• Supports DDR3 1600/1333/1066 MHz, 2 x SO-DIMM slots, Max. up to 16GB
VGA	• Supports 1 x Dual-slot Graphics Card*
Optical Drive	• 1 x Slim Slot-in Super-Multi Drive
Hard Disk	• Supports 3.5"HDD and 2.5"HDD
WiFi + BT	• 2T2R WiFi 802.11ac + BT v4.0
Front I/O	• 4 x USB 3.0, 1 x MIC, 1 x Headphone • 4-in-1 Card reader (SD3.0/MMC/MS/MS PRO)
Rear I/O	• 1 x 7.1HD audio with Creative Sound Core3D, • 1 x Intel Gigabit LAN, 4 x USB3.0, 4 x USB2.0, • 1 x eSATA2, 1 x DP, 1 x HDMI
All-In-One OLED Button	• A-Command
Cooling	• Top : 2 x 70mm fan, Bottom : 2 x 70mm fan
Power Supply	• SFX PSU 450W

** **Max. Supported VGA Dimension**: 290mm x 137mm x 43.5mm; **Max. Supported TDP**: 200W*
(If you use a graphics card with over 200W TDP, please note that the system's power supply is only 450W.)

1.3 Unique Features

ASRock A-Tuning

A-Tuning is ASRock's multi purpose software suite with a new interface, more new features and improved utilities, including XFast RAM, Dehumidifier, Good Night LED, FAN-Tastic Tuning, OC Tweaker and a whole lot more.

ASRock Instant Flash

ASRock Instant Flash is a BIOS flash utility embedded in Flash ROM. This convenient BIOS update tool allows you to update the system BIOS in a few clicks without preparing an additional floppy diskette or other complicated flash utility. Just save the new BIOS file to your USB storage and launch this tool by pressing <F6> or <F2> during POST to enter the BIOS setup menu to access ASRock Instant Flash. Please be noted that the USB flash drive or hard drive must use FAT32/16/12 file system.

ASRock APP Charger

Simply by installing the ASRock APP Charger makes your iPhone/iPad/iPod Touch charge up to 40% faster than before on your computer. ASRock APP Charger allows you to quickly charge many Apple devices simultaneously and even supports continuous charging when your PC enters into Suspend to RAM (S3), hibernation mode (S4) or power off (S5).

ASRock XFast USB

ASRock XFast USB can boost the performance of your USB storage devices. The performance may depend on the properties of the device.

ASRock XFast LAN

ASRock XFast LAN provides faster internet access, which includes the benefits listed below. LAN Application Prioritization: You can configure your application's priority ideally and add new programs to the list. Lower Latency in Game: After setting online game's priority higher, it can lower the latency in games. Traffic Shaping: You can watch Youtube HD videos and download simultaneously. Real-Time Analysis of Your Data: With the status window, you can easily recognize which data streams you are currently transferring.

ASRock XFast RAM

ASRock XFast RAM is included in A-Tuning. It fully utilizes the memory space that cannot be used under Windows® 32-bit operating systems. ASRock XFast RAM shortens the loading time of previously visited websites, making web surfing faster than ever. And it also boosts the speed of Adobe Photoshop 5 times faster. Another advantage of ASRock XFast RAM is that it reduces the frequency of accessing your SSDs or HDDs in order to extend their lifespan.

ASRock X-FAN

Greater air flow, faster heat dissipation! ASRock X-FAN allows the motherboard to breathe smoothly. It will be automatically activated only when the system rises to a certain temperature under heavy-loading. Normally, ASRock X-FAN will remain deactivated to give users the quietest computing experience

ASRock Crashless BIOS

ASRock Crashless BIOS allows users to update their BIOS without fear of failing. If power loss occurs during the BIOS updating process, ASRock Crashless BIOS will automatically finish the BIOS update procedure after regaining power. Please note that BIOS files need to be placed in the root directory of your USB disk. Only USB 2.0 ports support this feature.

ASRock OMG (Online Management Guard)

Administrators are able to establish an internet curfew or restrict internet access at specified times via OMG. You may schedule the starting and ending hours of internet access granted to other users. In order to prevent users from bypassing OMG, guest accounts without permission to modify the system time are required.

ASRock Internet Flash

ASRock Internet Flash downloads and updates the latest UEFI firmware version from our servers for you without entering Windows® OS. Please setup network configuration before using Internet Flash.

ASRock UEFI System Browser

ASRock System Browser shows the overview of your current PC and the devices connected.

ASRock Dehumidifier Function

Users may prevent motherboard damages due to dampness by enabling "Dehumidifier Function". When enabling Dehumidifier Function, the computer will power on automatically to dehumidify the system after entering S4/S5 state.

ASRock Interactive UEFI

ASRock Interactive UEFI is a blend of system configuration tools, cool sound effects and stunning visuals. The unprecedented UEFI provides a more attractive interface and more amusment.

ASRock Fast Boot

With ASRock's exclusive Fast Boot technology, it takes less than 1.5 seconds to logon to Windows 8 from a cold boot. No more waiting! The speedy boot will completely change your user experience and behavior.

ASRock Restart to UEFI

Windows® 8 brings the ultimate boot up experience. The lightning boot up speed makes it hard to access the UEFI setup. ASRock Restart to UEFI allows users to enter the UEFI automatically when turning on the PC. By enabling this function, the PC will enter the UEFI directly after you restart.

ASRock Good Night LED

ASRock Good Night LED technology offers you a better sleeping environment by extinguishing the unessential LEDs. By enabling Good Night LED in the BIOS, the Power/HDD LEDs will be switched off when the system is powered on. Good Night LED will automatically switch off the Power and Keyboard LEDs when the system enters into Standby/Hibernation mode as well.

ASRock USB Key

In a world where time is money, why waste precious time everyday typing usernames to log in to Windows? Why should we even bother memorizing those foot long passwords? Just plug in the USB Key and let your computer log in to windows automatically!

ASRock Key Master

What good is a weapon if you are unable to wield it proficiently? Key Master enhances your mouse and keyboard with customizable macros, sniper modes, scroll speed, key repeat rates and repeat delay, turning your boring old keyboard and mouse into lethal weapons.

ASRock FAN-Tastic Tuning

ASRock FAN-Tastic Tuning is included in A-Tuning. Configure up to five different fan speeds using the graph. The fans will automatically shift to the next speed level when the assigned temperature is met.

ASRock Easy Driver Installer

For users that don't have an optical disk drive to install the drivers from our support CD, Easy Driver Installer is a handy tool in the UEFI that installs the LAN driver to your system via an USB storage device, then downloads and installs the other required drivers automatically.

Chapter 2 Product Overview

This chapter provides diagrams showing the location of important components of the M8.

2.1 Front View

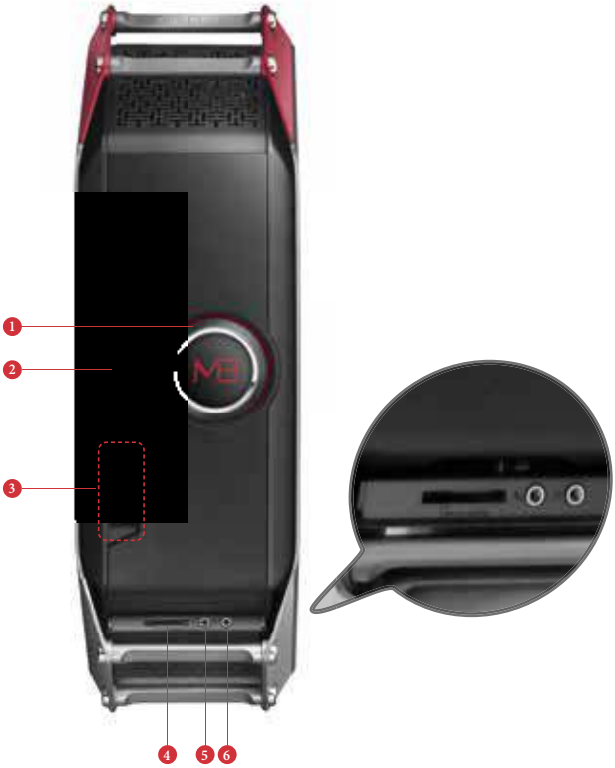

No.	Description
1	A-Command (All-In-One OLED Button)
2	Optical disk drive eject button
3	4 x USB 3.0 ports
4	4-in-1 Card reader (SD3.0/MMC/MS/MS PRO)
5	Microphone jack
6	Headphone jack

2.1.1 The Function of A-Command

The A-Command is a multipurpose controller knob which is used to cycle through various functions.

Controlling A-Command

- Rotate the knob to toggle among main functions or options.
- Press once to confirm your selection.

Powering on the System

Press A-Command to turn on the system power. Wait until the operating system loads automatically.

Powering off the System

When the OLED shows the M8 Logo / Date and Time, press A-Command and select "Yes" to turn off the system power.

Before Entering Windows

There are three main functions before entering the OS.

- **M8 Logo / Date and Time:**
  After the logo appears for ten seconds, the screen shows date and time.
  The display will go off if you leave it idle for five minutes.
- **Light:**
  Toggle on/off the light in the case.
- **Time:**
  Toggle the time on/off.
  If this option is set to on, M8 Logo / Date and Time screens are available. If this option is set to off, M8 Logo / Date and Time screens are hidden.

Under Windows:

There are six main functions after entering the OS.

- **M8 Logo / Date and Time:**
  After the logo appears for ten seconds, the screen shows date and time.
  The display will go off if you leave it idle for five minutes.

- **Volume:**
  Increase/decrease the volume level by turning the knob right/left.

- **Mode:**
  Toogle among three power management modes – Eco, Standard or Speed.

- **Info:**
  Toggle among various types of critical information to check the system's status. The OLED screen shows the CPU frequency, CPU usage, LAN usage, or APM* data.
  *APM (Actions per minute) measures the number of keyboard/mouse-clicking action that you can perform in a minute. To find out how fast your fingers can move, press A-Command once to start counting APM. Press A-Command once again to stop it.

- **Light:**
  Toggle on/off the light in the case, or enable the Good Night LED function*.
  On: Toggle on the light in the case
  Off: Toggle off the light in the case
  All off: Toggle off the light in the case; enable the Good Night LED function
  *ASRock Good Night LED technology offers you a better sleeping environment by extinguishing the unessential LEDs. By enabling Good Night LED, the Power/HDD LEDs will be switched off when the system is powered on. Good Night LED will automatically switch off the Power and Keyboard LEDs when the system enters into Standby/Hibernation mode as well.

- **Time:**
  Toggle the time on/off.
  If this option is set to on, M8 Logo / Date and Time screens are available. If this option is set to off, M8 Logo / Date and Time screens are hidden.

2.2 Rear View

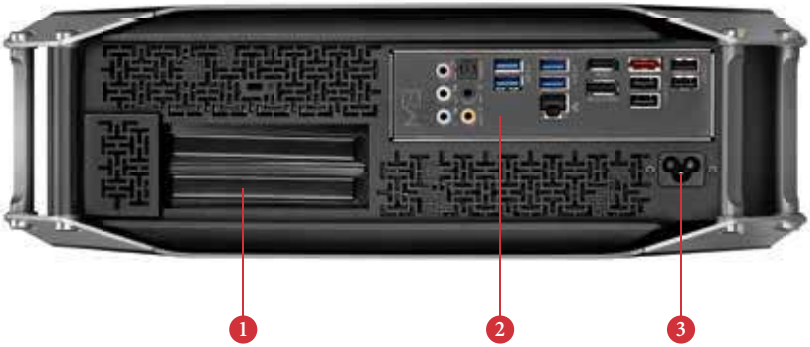

No.	Description
1	PCIe slot covers
2	I/O panel
3	AC input power connector

2.2.1 I/O Panel

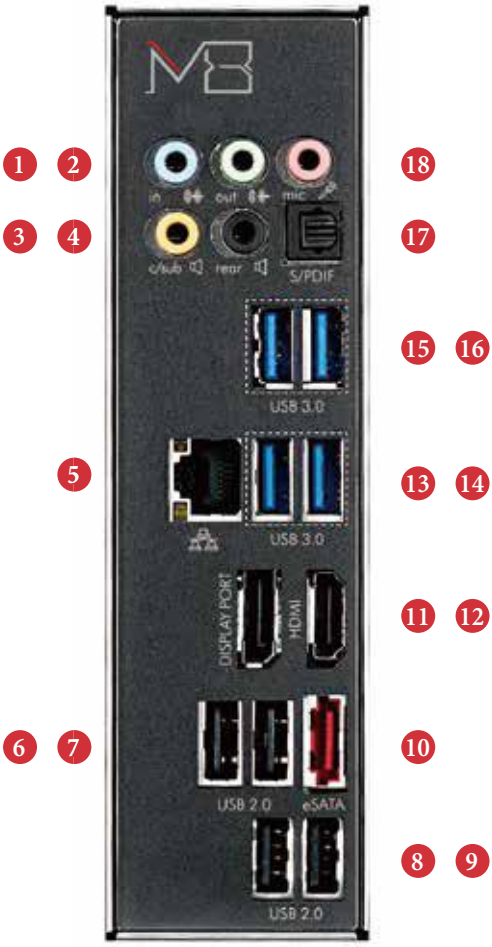

English

No.	Description	No.	Description
1	Line In port (light blue)	10	eSATA2 port**
2	Line Out port (lime)	11	DisplayPort
3	Center/Subwoofer port (orange)	12	HDMI port
4	Rear Speaker Out port (black)	13	USB3.0 port
5	LAN RJ-45 port* (Intel Gigabit LAN)	14	USB3.0 port
6	USB2.0 ports	15	USB3.0 port
7	USB2.0 ports	16	USB3.0 port
8	USB2.0 ports	17	Optical SPDIF Out port
9	USB2.0 ports	18	Microphone port (pink)

** There are two LEDs on the LAN port. Please refer to the table below for the LAN port LED indications.*

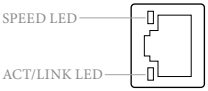

LAN Port

Activity / Link LED		Speed LED	
Status	Description	Status	Description
Off	No Link	Off	10Mbps connection
Blinking	Data Activity	Orange	100Mbps connection
On	Link	Green	1Gbps connection

*** The eSATA connector is shared with SATA3_4 connector.*

2.3 Inside View

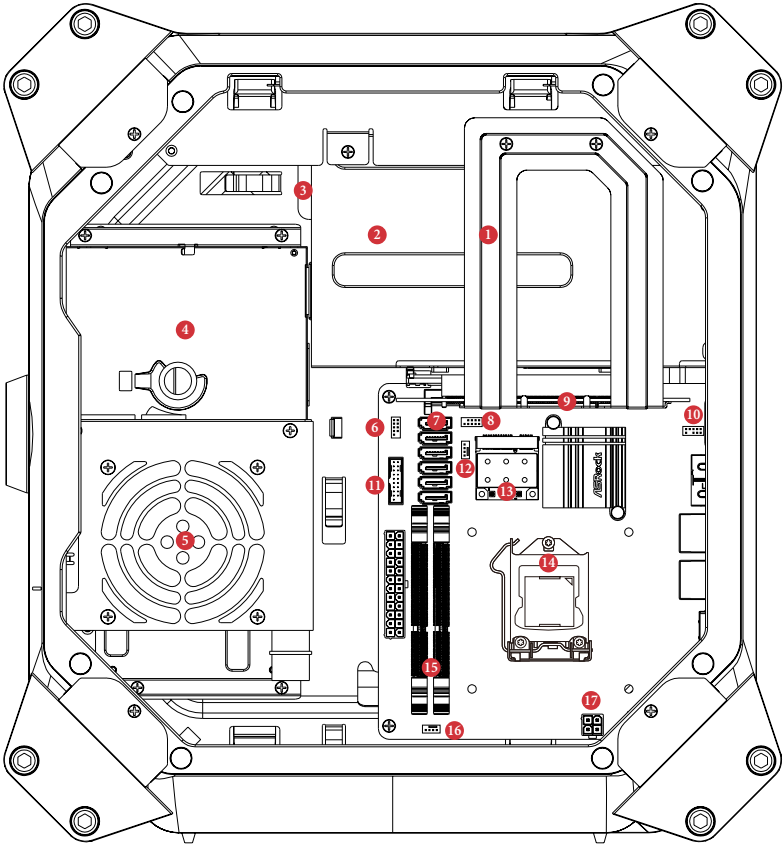

No.	Description
1	Riser card retention bracket
2	VGA card holder
3	Hard disk drive tray (compatible with 4 x 2.5" HDD or 1 x 3.5 HDD)
4	ODD + 2.5" HDD Tray
	(compatible with 1 x slot-in ODD and 1 x 2.5" HDD)
5	Power supply unit (450W)
6	Power panel connector
7	SATA 3.0 connectors
8	USB2.0 connector
9	PCIe slot

English

10	Front audio connector
11	USB3.0 connector
12	Auxiliary fan connector
13	2T2R WiFi Module (802.11ac)
14	CPU socket
15	DIMM sockets
16	Chassis fan connector
17	ATX 12V power connector

Hard drives are not included with this system.

Chapter 3 Hardware Installation

This chapter helps you assemble the chassis and install components. Please follow the installation procedures listed below.

Installation Procedures

1. Removing the side panels
2. Removing the top cover
3. Removing the VGA card holder
4. Removing the riser card
5. Installing the hard drives
6. Installing the CPU
7. Installing the CPU Fan and CPU Cooler
8. Installing Memory Modules (SO-DIMM)
9. Replace the riser card
10. Installing the graphics card
11. Replace the VGA card holder
12. Replacing the side panels
13. Replacing the top cover

After making sure that you have properly connected the power supply and all the necessary peripherals, power on the system.

3.1 Installing System Components

3.1.1 Removing the Side Panels

To remove the side panels, you have to unlock the keylock on the top cover using the system key. Before unlocking, power off the system and unplug the power cord. After the side panel are replaced, make sure to lock the keylock on the top cover and then power on the system.

1. Place the system in an upright position.
2. Unlock the system keylock on the top cover.

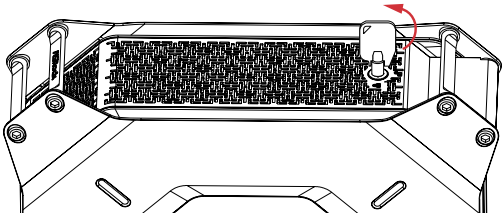

3. Remove the side panels.

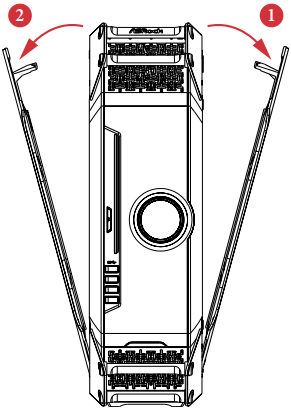

1. Pull the right side panel away from the chassis.
2. Pull the left side panel away from the chassis.

3.1.2 Removing the Top Cover

1. To remove the top cover, you have to follow the procedures below:
1) Power off the system and unplug the power cord.
2) Unlock the keylock on the top cover using the system key.
3) Follow the instructions in Section 3.1 to remove the right side panel.
4) Slide the top cover toward the front of the system until it releases from the latch.
2. After the top cover is replaced, make sure to lock the keylock on the top cover and then power on the system.
3. The system must be operated with the chassis top cover installed to ensure proper cooling.

Remove the top cover to add graphics card or install hard drives.

1. Place the system in an upright position.
2. Unlock the system keylock on the top cover.

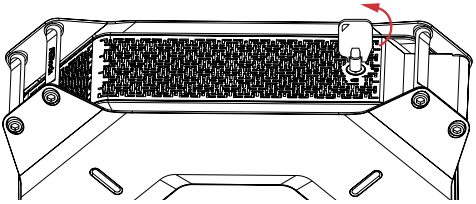

3. Follow the instructions in Section 3.1 to remove the right side panel.
4. Remove the one screw and two hexagon nuts that secure the top right bracket ear to the top cover.

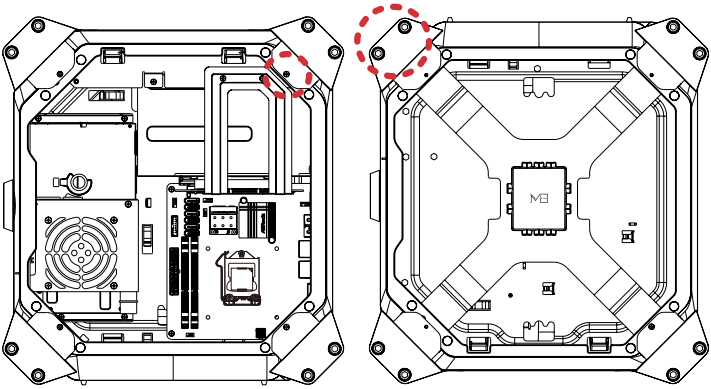

5. Draw out the mounting bracket from the chassis.

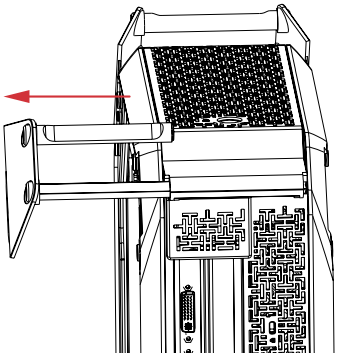

6. Follow the instructions in Section 3.1 to release the left side panel.
7. Release the top cover.

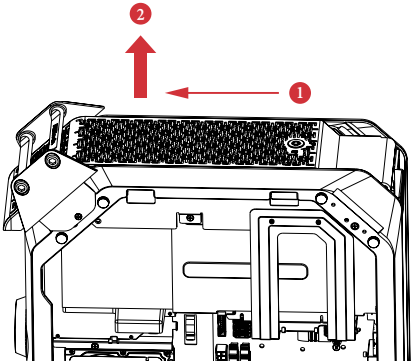

1. Slide the top cover toward the front of the system until it releases.
2. Lift up the top cover.

8. Disconnect the 4-pin top fan connector.

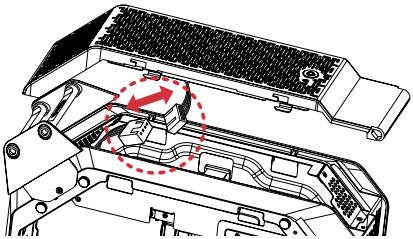

9. Set the top cover aside in a secure location.

3.1.3 Removing the VGA Card Holder

To remove the VGA card holder, you have to remove the side panels and top cover, giving you access to the VGA card holder inside.

1. Remove the VGA card holder.

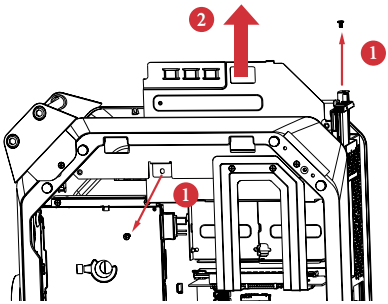

1. Remove the two screws that hold the VGA card holder in place.
2. Lift the VGA card holder up and off the chassis.

3.1.4 Removing the Riser Card

1. Remove the riser card.

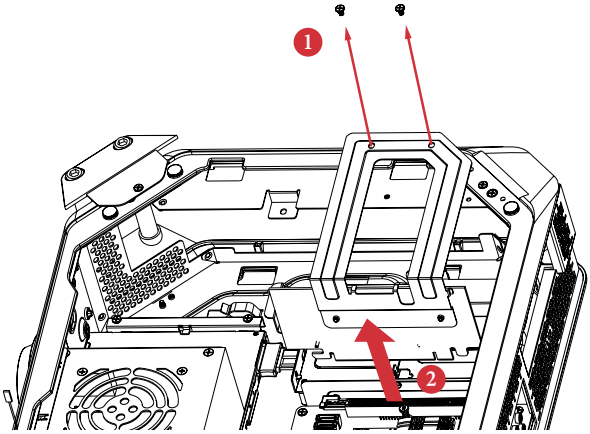

1. Remove the two screws securing the riser card retention bracket.
2. Grasp the riser card by its edges, and carefully pull it from the expansion slot.

3.1.5 Installing the Hard Drives

3.1.5.1 Installing the Hard Drive(s) to the Drive Tray Assembly

1. To install the hard drives, you have to remove the VGA card holder and the riser card , giving you access to the drive tray assembly inside.
2. The drive tray assembly supports up to four 2.5-inch hard drives. You can also choose to install one 3.5-inch hard drive.
3. Hard drives are not included with this system.

1. Remove the drive tray assembly.

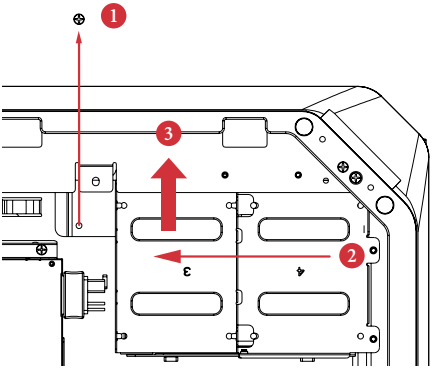

1. Remove the screw that secures the drive tray assembly to the chassis.
2. Slide the drive tray assembly toward the front of the system to disengage it from the latches.
3. Lift it away from the chassis.

2. Take apart the drive tray assembly.

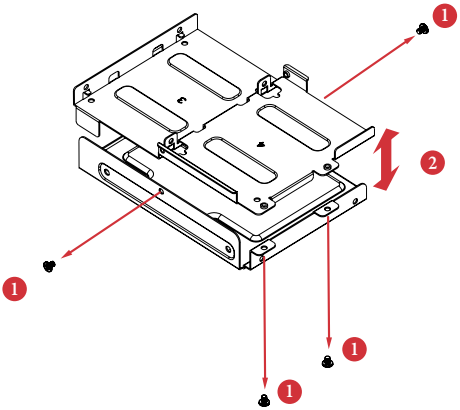

1. Remove the screws that secure the bottom HDD tray with the top tray.
2. Take the assembly apart.

3. Install a 3.5" HDD or up to four 2.5" HDD.

Installing a 3.5-Inch Hard Drive:

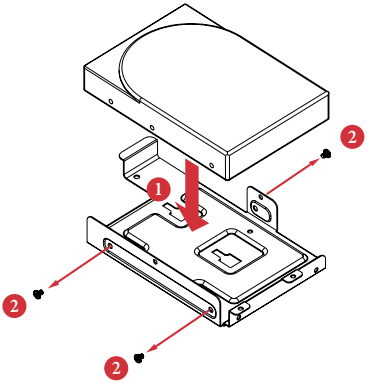

1. Set the top tray aside.
   Place a 3.5" HDD to the bottom HDD tray with the printed circuit board side facing down. Carefully align the mounting holes in the hard drive and the tray.
2. Secure the hard drive using the three screws (three on the sides).

or

Installing up to Four 2.5-Inch Hard Drive

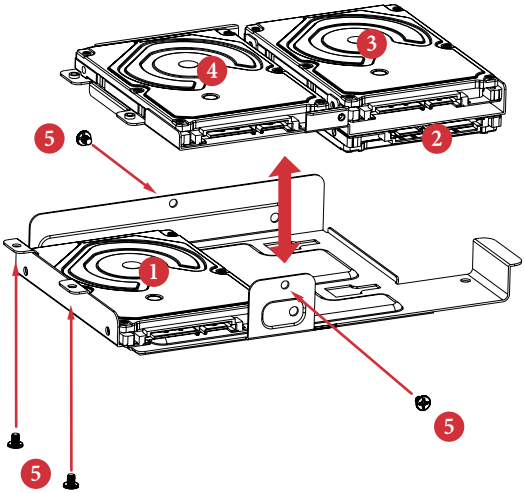

1. Place the first 2.5" HDD to the bottom HDD tray and secure the hard drive using the four screws (two on the sides and two in the rear).
2. Place the second 2.5" HDD to the top HDD tray and secure the hard drive using the four screws.
3. Secure the third HDD to the top HDD tray.
4. Secure the fourth HDD to the top HDD tray.
5. Attach the top HDD tray to the bottom HDD tray using four screws.

4. Place the drive tray back into the chassis.
   Slide the drive tray toward the rear of the system until the latches lock it into place.
5. Install and tighten the screw that secures the drive tray assembly to the chassis.
6. Connect the power and SATA data cables.

3.1.5.2 Installing the Hard Drive to the ODD + 2.5" HDD Tray

1. To install the hard drives, you have to remove the PSU.
2. The ODD + 2.5" HDD Tray fits a slim slot-in optical disk drive (ODD) and a 2.5-inch hard drives.
3. Hard drives are not included with this system.

Installing a 2.5-Inch Hard Drive

1. Remove the PSU.

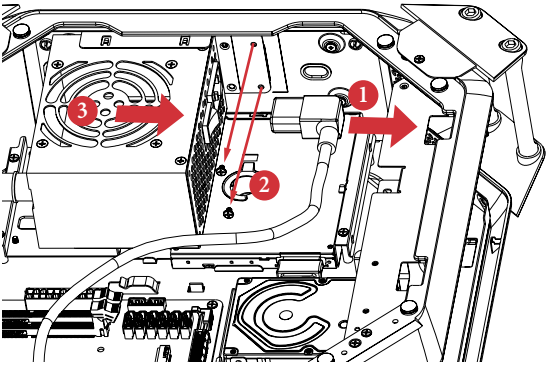

1. Unplug the PSU power cable.
2. Remove the two screws securing the power supply unit.
3. Slide the PSU to the right until it releases. Lift the PSU and set it aside.

2. Remove the ODD+2.5" HDD Tray.

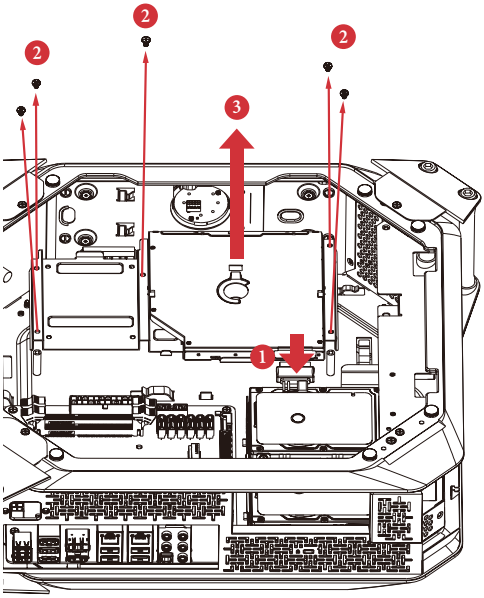

1. Unplug the ODD SATA power connector.
2. Remove the five screws securing the ODD + 2.5" HDD Tray to the chassis.
3. Lift the tray off the chassis.

3. Place a 2.5" HDD to the HDD tray and secure the hard drive using the four screws (four in the rear).

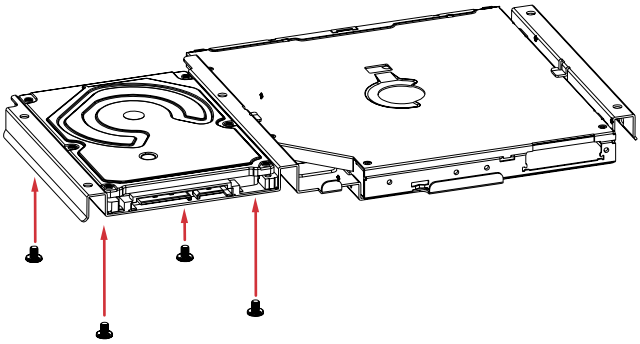

4. Align the screw holes on the ODD + 2.5" HDD Tray with the screw holes on the chassis. Fasten the five screws.
5. Connect the power and SATA data cables and the ODD SATA power connector.
6. Re-install the PSU.

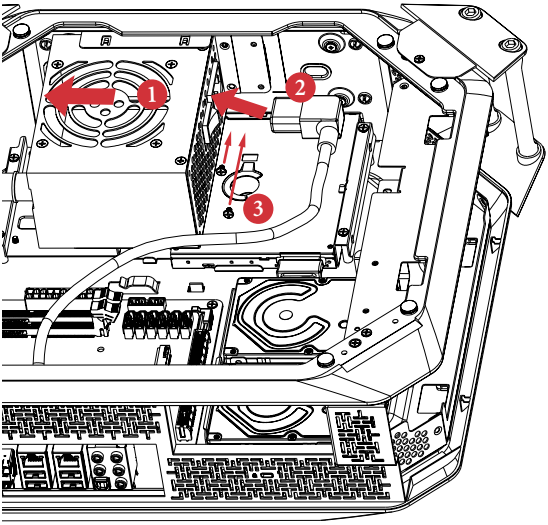

1. Align the PSU with the starting line and then slide the PSU to the left until it reaches the end line. Make sure that it clicks into place.
2. Re-plug the PSU power cable.
3. Secure the two screws securing the power supply unit.

3.1.6 Replacing the ODD

1. Follow the instructions in section 3.1.5.2 to remove the power supply unit and lift the tray off the chassis.
2. Remove the old optical disk drive.
3. Slide a new optical disk drive into the ODD tray.
4. Attach the optical disk drive to the ODD tray using screws.
5. Connect the ODD SATA power connector.
6. Follow the instructions in section 3.1.5.2 to replace the ODD + 2.5" HDD Tray and the power supply unit.

3.1.7 Installing the CPU

1. *Before you insert the 1150-Pin CPU into the socket, please check if the **PnP cap** is on the socket, if the CPU surface is unclean, or if there are any **bent pins** in the socket. Do not force to insert the CPU into the socket if above situation is found. Otherwise, the CPU will be seriously damaged.*
2. *Unplug all power cables before installing the CPU.*

1

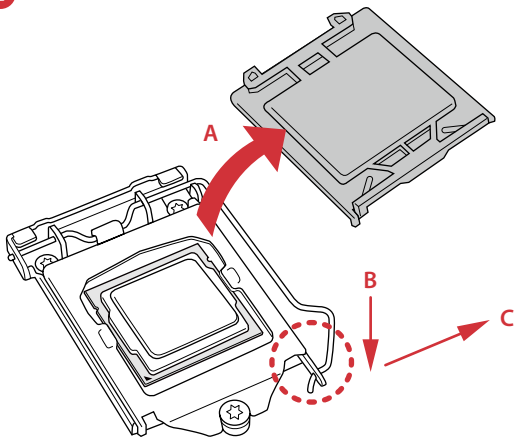

2

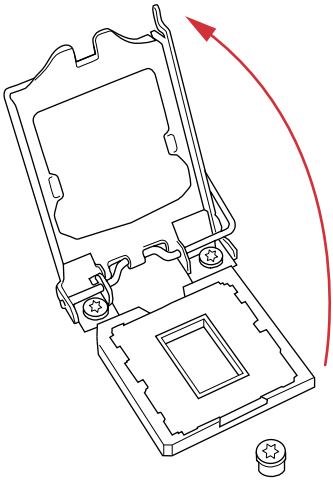

3

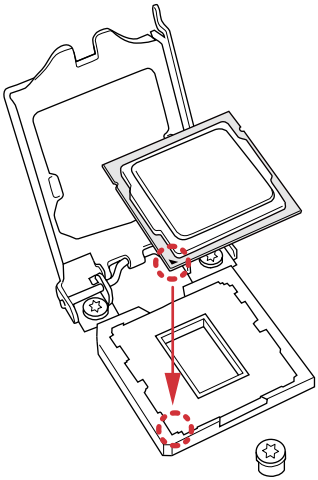

4

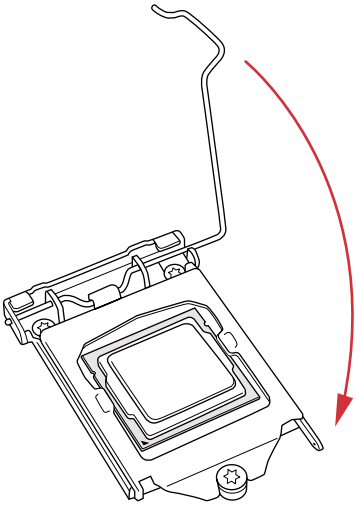

Please save and replace the cover if the processor is removed. The cover must be placed if you wish to return the motherboard for after service.

3.1.8 Installing the CPU Fan and CPU Cooler

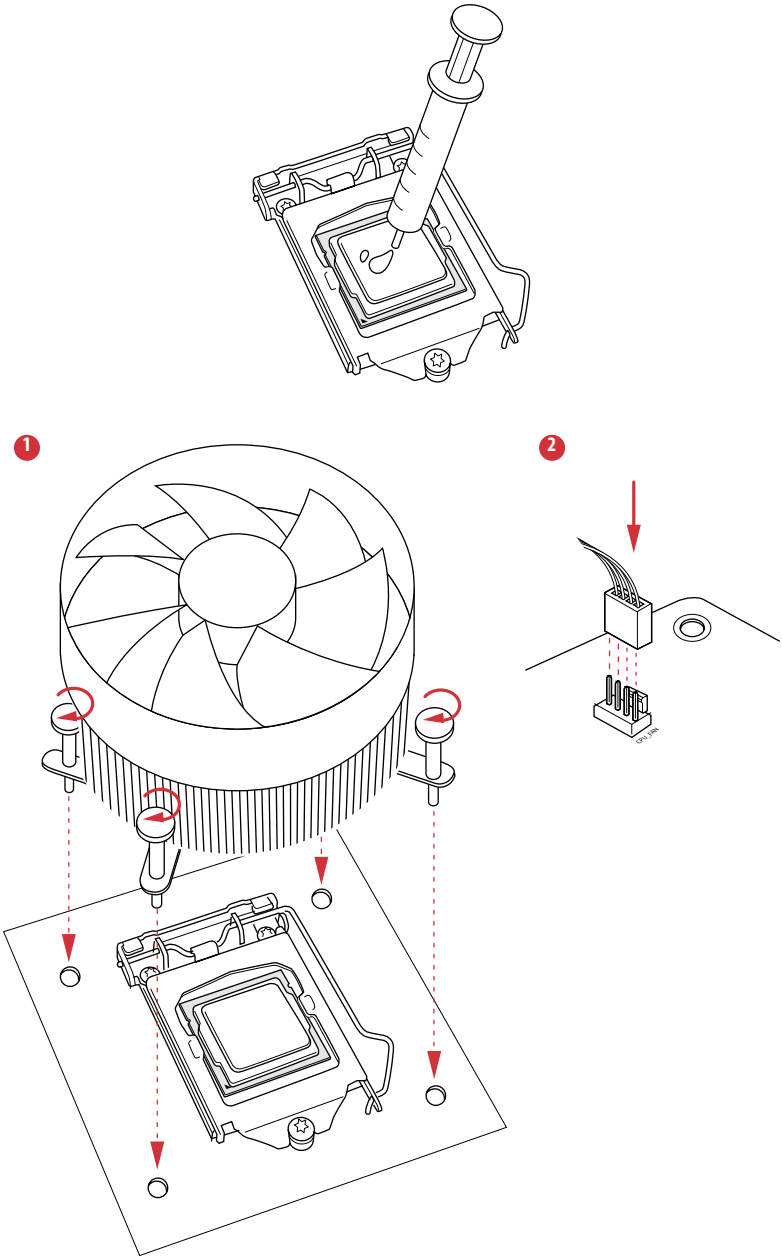

1. *Make sure to evenly spread the thermal paste over the CPU to improve heat dissipation.*
2. *Ensure that the CPU and the CPU cooler are securely fastened and in good contact with each other.*
3. *To make sure the CPU cooler is seated properly, it is highly recommended to check whether or not the CPU temperature reported in the BIOS is at a normal level.*

3.1.9 Installing Memory Modules (SO-DIMM)

This motherboard provides two 204-pin DDR3 (Double Data Rate 3) SO-DIMM slots.

It is not allowed to install a DDR or DDR2 memory module into a DDR3 slot; otherwise, this motherboard and SO-DIMM may be damaged.

The DIMM only fits in one correct orientation. It will cause permanent damage to the motherboard and the DIMM if you force the DIMM into the slot at incorrect orientation.

1

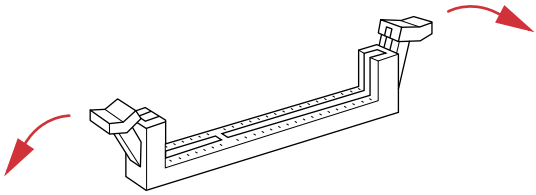

2

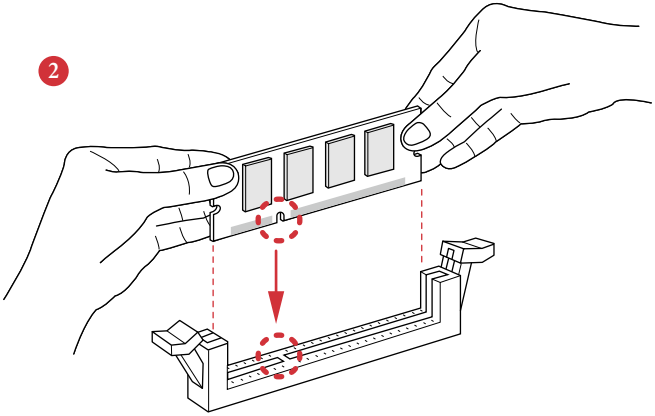

3

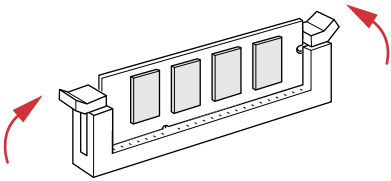

3.2 Replacing System Components

3.2.1 Replacing the Riser Card

1. Replace the riser card.

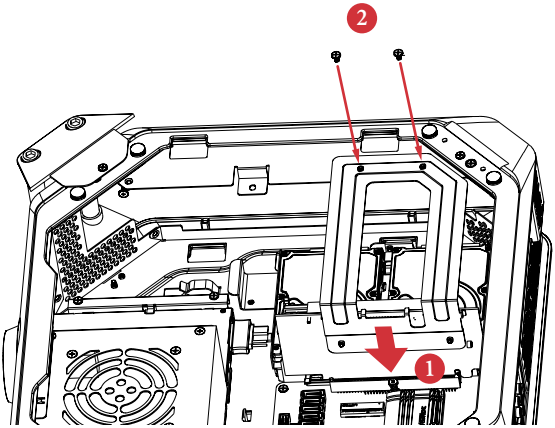

1. Align the riser card keys correctly with the expansion slot on the system board and insert it into place.
2. Fasten the two screws securing the riser card retention bracket.

3.2.2 Installing the Graphics Card

The M8 chassis supports both single-slot graphics card and dual-slot graphics card.

> *Before graphics card installation, please lift the VGA card holder and make sure the riser card is installed properly.*

1. Open the latch of the VGA card holder and remove the screws that secures the slot cover.
2. Remove the slot cover(s) on the VGA card holder.
3. Place your graphics card to the VGA card holder and secure it using screw(s).
4. Close the latch to make sure the graphics card is securely seated.

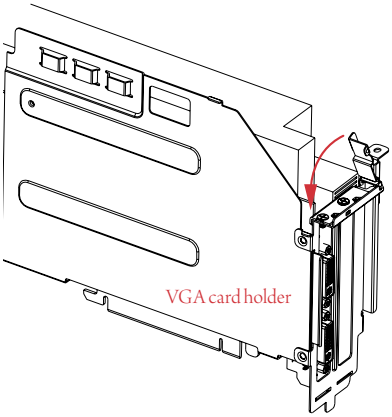

Standard-height card

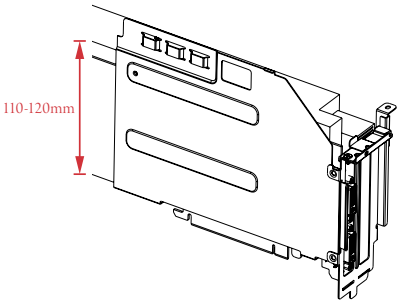

Over-height card

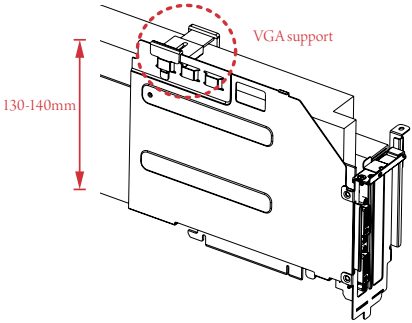

*If the graphics card you are using is over-height, use the VGA support to secure the card.

5. Engage the VGA card holder with the two vertical sliding tracks while sliding it back to the chassis.

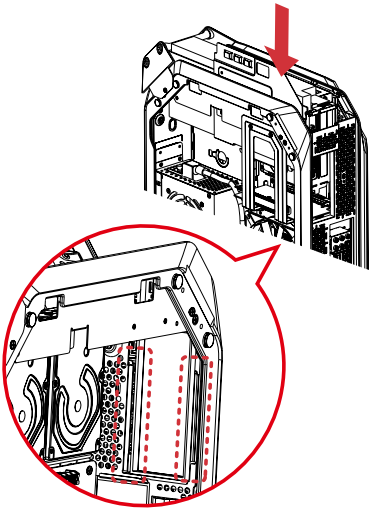

6. Make sure the VGA card holder is secured by the tongue plate and the graphics card is seated correctly.

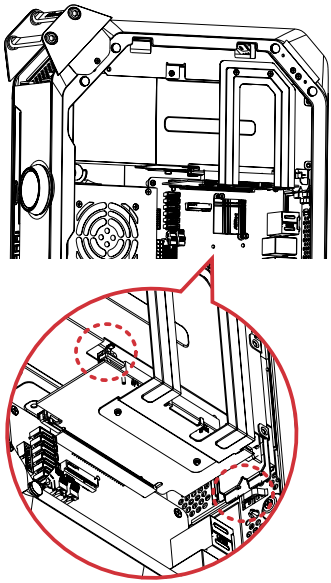

7. Secure the VGA card holder with the chassis using the two screws previously removed.

3.2.3 Replacing the Top Cover

1. Place the system in an upright position.
2. Make sure to release the left side panel.
3. Connect the 4-pin top fan connector.

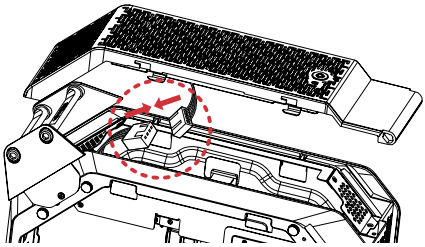

4. Replace the top cover.

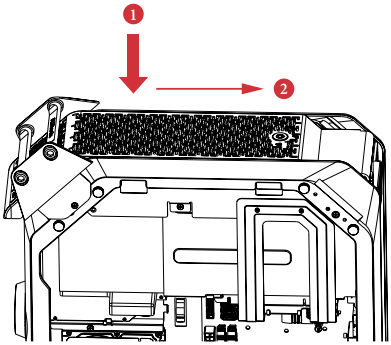

1. Replace the top cover onto the chassis.
2. Slide the top cover toward the rear of the system until it clicks into place.

5. Insert the mounting bracket into the mounting holes.

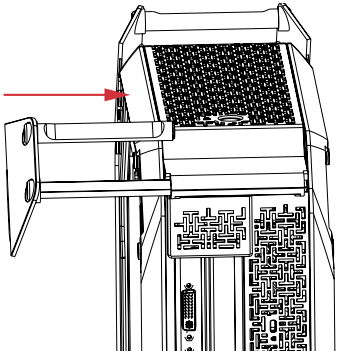

6. Secure it to the case with the three screws previously removed.

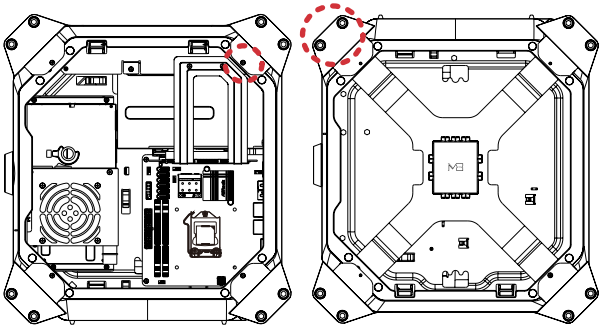

3.2.1 Replacing the Side Panels

1. Place the system in an upright position.
2. Replace the side panels.

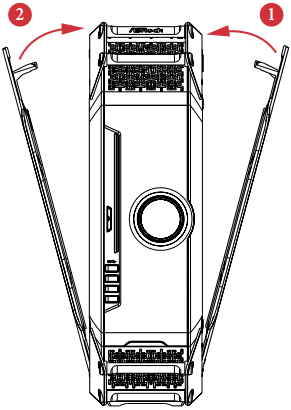

1. Snap the right side panel into place.
2. Snap the left side panel into place.

3. Lock the system keylock on the top cover.

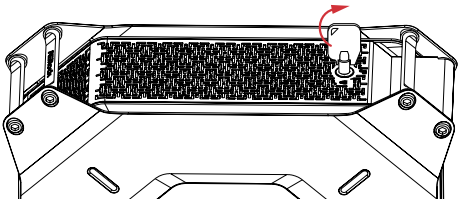

Chapter 4 Motherboard

4.1 Motherboard Layout

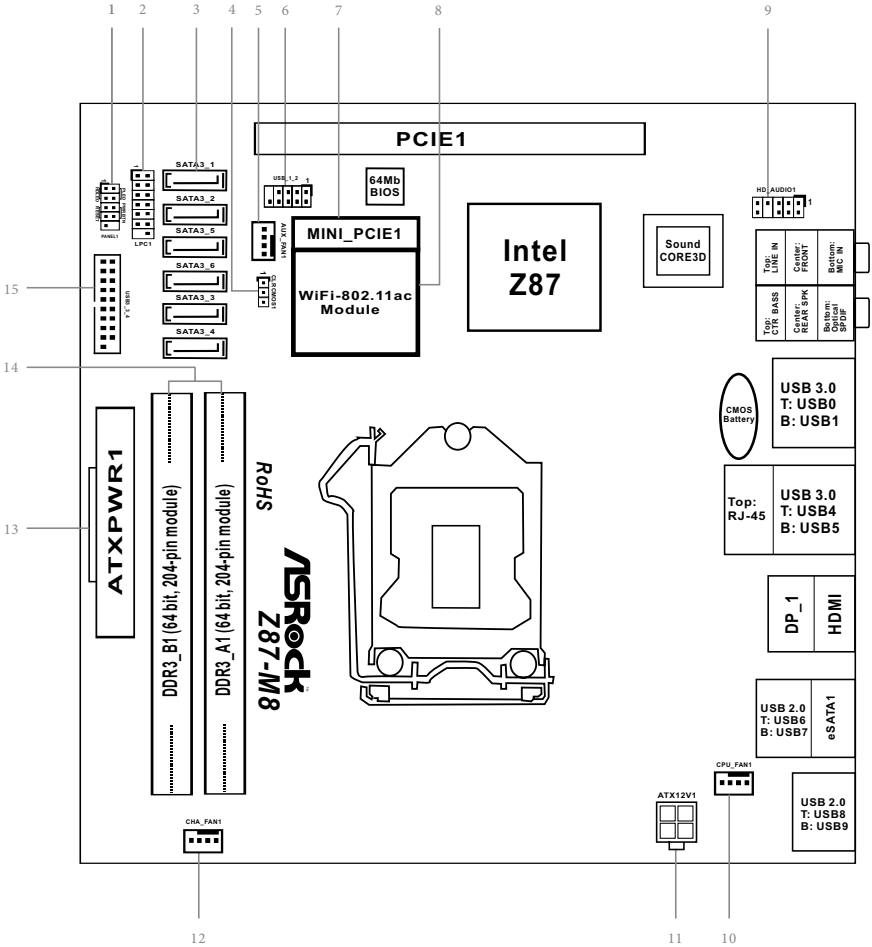

English

No.	Description
1	System Panel Header (PANEL1)
2	LPC Debug Header (LPC1)
3	SATA3 Connectors
	(SATA3_1, SATA3_2, SATA3_3, SATA3_4, SATA3_5, SATA3_6)
4	Clear CMOS Jumper (CLRCMOS1)
5	Auxiliary Fan Connector (AUX_FAN1)
6	USB 2.0 Header (USB_1_2)
7	mini-PCI Express Slot (MINI_PCIe1)
8	WiFi-802.11ac Module
9	Front Panel Audio Header (HD_AUDIO1)
10	CPU Fan Connector (CPU_FAN1)
11	ATX 12V Power Connector (ATX12V1)
12	Chassis Fan Connector (CHA_FAN1)
13	ATX Power Connector (ATXPWR1)
14	2 x 204-pin DDR3 SO-DIMM Slots (DDR3_A1, DDR3_B1)
15	USB 3.0 Header (USB3_3_4)

4.2 Jumpers Setup

The illustration shows how jumpers are setup. When the jumper cap is placed on the pins, the jumper is "Short". If no jumper cap is placed on the pins, the jumper is "Open". The illustration shows a 3-pin jumper whose pin1 and pin2 are "Short" when a jumper cap is placed on these 2 pins.

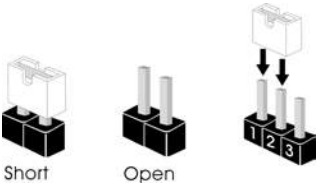

Clear CMOS Jumper (CLRCMOS1) (see p.41, No. 31)	1_2 Default	2_3 Clear CMOS

CLRCMOS1 allows you to clear the data in CMOS. To clear and reset the system parameters to default setup, please turn off the computer and unplug the power cord from the power supply. After waiting for 15 seconds, use a jumper cap to short pin2 and pin3 on CLRCMOS1 for 5 seconds. However, please do not clear the CMOS right after you update the BIOS. If you need to clear the CMOS when you just finish updating the BIOS, you must boot up the system first, and then shut it down before you do the clear-CMOS action. Please be noted that the password, date, time, and user default profile will be cleared only if the CMOS battery is removed.

The Clear CMOS Button has the same function as the Clear CMOS jumper.

English

4.3 Onboard Headers and Connectors

Onboard headers and connectors are NOT jumpers. Do NOT place jumper caps over these headers and connectors. Placing jumper caps over the headers and connectors will cause permanent damage to the motherboard.

System Panel Header
(9-pin PANEL1)
(see p.41, No. 1)

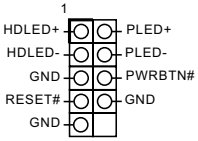

Connect the power switch, reset switch and system status indicator on the chassis to this header according to the pin assignments below. Note the positive and negative pins before connecting the cables.

PWRBTN (Power Switch):
Connect to the power switch on the chassis front panel. You may configure the way to turn off your system using the power switch.

RESET (Reset Switch):
Connect to the reset switch on the chassis front panel. Press the reset switch to restart the computer if the computer freezes and fails to perform a normal restart.

PLED (System Power LED):
Connect to the power status indicator on the chassis front panel. The LED is on when the system is operating. The LED keeps blinking when the system is in S3 sleep state. The LED is off when the system is in S4 sleep state or powered off (S5).

HDLED (Hard Drive Activity LED):
Connect to the hard drive activity LED on the chassis front panel. The LED is on when the hard drive is reading or writing data.

The front panel design may differ by chassis. A front panel module mainly consists of power switch, reset switch, power LED, hard drive activity LED, speaker and etc. When connecting your chassis front panel module to this header, make sure the wire assignments and the pin assignments are matched correctly.

Serial ATA3 Connectors
(SATA3_1)
(SATA3_2)
(SATA3_5)
(SATA3_6)
(SATA3_3)
(SATA3_4)
(see p.41, No. 3)

These six SATA3 connectors support SATA data cables for internal storage devices with up to 6.0 Gb/s data transfer rate. SATA3_4 connector is shared with the eSATA port.

USB 2.0 Headers
(9-pin USB_1_2)
(see p.41, No. 6)

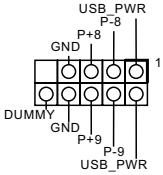

Besides two USB 2.0 ports on the I/O panel, there are two headers on this motherboard. Each USB 2.0 header can support two ports.

USB 3.0 Headers
(19-pin USB3_3_4)
(see p.41, No. 15)

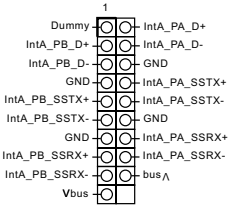

Besides four USB 3.0 ports on the I/O panel, there are one header on this motherboard. Each USB 3.0 header can support two ports.

English

Front Panel Audio Header
(9-pin HD_AUDIO1)
(see p.41, No. 9)

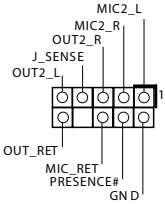

This header is for connecting audio devices to the front audio panel.

1. *High Definition Audio supports Jack Sensing, but the panel wire on the chassis must support HDA to function correctly. Please follow the instructions in our manual and chassis manual to install your system.*
2. *If you use an AC'97 audio panel, please install it to the front panel audio header by the steps below:*
   A. Connect Mic_IN (MIC) to MIC2_L.
   B. Connect Audio_R (RIN) to OUT2_R and Audio_L (LIN) to OUT2_L.
   C. Connect Ground (GND) to Ground (GND).
   D. MIC_RET and OUT_RET are for the HD audio panel only. You don't need to connect them for the AC'97 audio panel.
   E. To activate the front mic, go to the "FrontMic" Tab in the Realtek Control panel and adjust "Recording Volume".

Chassis and Auxiliary Fan Connectors
(4-pin CHA_FAN1)
(see p.41, No. 12)

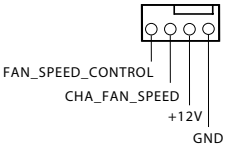

Please connect fan cables to the fan connectors and match the black wire to the ground pin.

(4-pin AUX_FAN1)
(see p.41, No. 12)

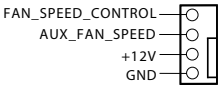

CPU Fan Connectors
(4-pin CPU_FAN1)
(see p.41, No. 10)

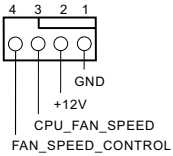

This motherboard provides a 4-Pin CPU fan (Quiet Fan) connector. If you plan to connect a 3-Pin CPU fan, please connect it to Pin 1-3.

English

ATX Power Connector
(24-pin ATXPWR1)
(see p.41, No. 5)

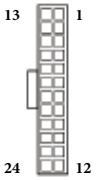

This motherboard provides a 24-pin ATX power connector. To use a 20-pin ATX power supply, please plug it along Pin 1 and Pin 13.

ATX 12V Power Connector
(4-pin ATX12V1)
(see p.41, No. 13)

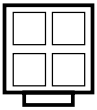

This motherboard provides a 4-pin ATX 12V power connector. To use a 8-pin ATX power supply, please plug in 4 of the 8 pins (Pin 1 to Pin 4).

LPC Debug Header
(13-pin LPC1)
(see p.41, No. 2)

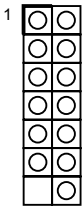

PIN	Signal Name	PIN	Signal Name
14	+3V	13	No pin
12	+3V	11	+3V
10	GND	9	GND
8	LAD3	7	LAD2
6	LAD1	5	LAD0
4	LFRAME#	3	RESET#
2	GND	1	CLK

Chapter 5 Software and Utilities Operation

5.1 Installing Drivers

The Support CD that comes with the M8 contains necessary drivers and useful utilities that enhance the M8's features.

Running The Support CD

To begin using the support CD, insert the CD into your CD-ROM drive. The CD automatically displays the Main Menu if "AUTORUN" is enabled in your computer. If the Main Menu does not appear automatically, locate and double click on the file "ASRSETUP.EXE" in the Support CD to display the menu.

Drivers Menu

The drivers compatible to your system will be auto-detected and listed on the support CD driver page. Please click **Install All** or follow the order from top to bottom to install those required drivers. Therefore, the drivers you install can work properly.

Utilities Menu

The Utilities Menu shows the application software that the motherboard supports. Click on a specific item then follow the installation wizard to install it.

To improve Windows 7 compatibility, please download and install the following hot fix provided by Microsoft.
"KB2720599": http://support.microsoft.com/kb/2720599/en-us

5.2 A-Tuning

A-Tuning is ASRock's multi purpose software suite with a new interface, more new features and improved utilities, including XFast RAM, Dehumidifier, Good Night LED, FAN-Tastic Tuning, OC Tweaker and a whole lot more.

5.2.1 Installing A-Tuning

When you install the all-in-one driver to your system from ASRock's support CD, A-Tuning will be auto-installed as well. After the installation, you will find the icon "A-Tuning" on your desktop. Double-click the "A-Tuning" icon, A-Tuning main menu will pop up.

5.2.2 Using A-Tuning

There are five sections in A-Tuning main menu: Operation Mode, Tools, OC Tweaker, System Info and Tech Service.

Operation Mode

Choose an operation mode for your computer.

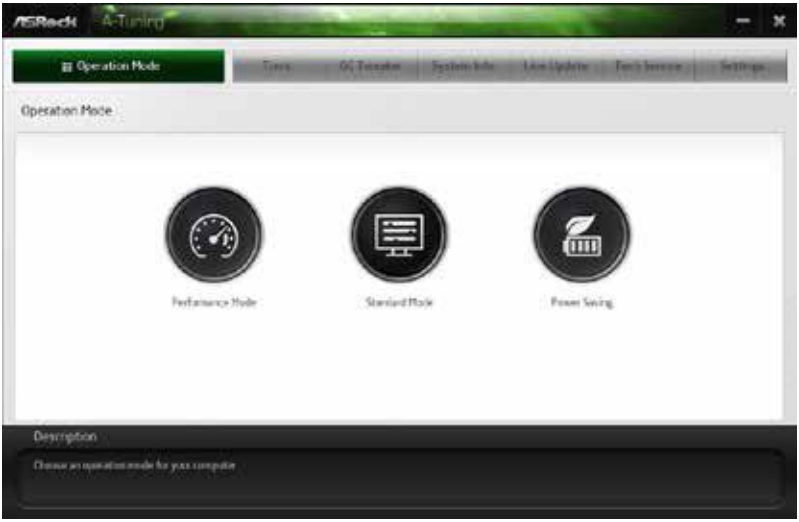

Tools

Various tools and utilities.

XFast RAM

Boost the system's performance and extend the HDD's or SDD's lifespan! Create a hidden partition, then assign which files should be stored in the RAM drive.

XFast LAN

Boost the speed of your internet connection! Select a specific mode for making the designated program's priority highest.

Fast Boot

Fast Boot minimizes your computer's boot time. Please note that Ultra Fast mode is only supported by Windows 8 and the VBIOS must support UEFI GOP if you are using an external graphics card.

OMG

Schedule the starting and ending hours of internet access granted to other users. Place X marks on the time table to disable the internet.

FAN-Tastic Tuning

Configure up to five different fan speeds using the graph. The fans will automatically shift to the next speed level when the assigned temperature is met.

Dehumidifier

Prevent motherboard damages due to dampness. Enable this function and configure the period of time until the computer powers on, and the duration of the dehumidifying process.

Key Master

Enhance your mouse and keyboard with customizable macros, sniper modes, scroll speed, key repeat rates and repeat delay.

USB Key

Plug in the USB Key and let your computer log in to windows automatically!

OC DNA

In OC DNA, you can save your OC settings as a profile and share with your friends. Your friends then can load the OC profile to their own system to get the same OC settings.

OC Tweaker

Configurations for overclocking the system.

System Info

View information about the system.

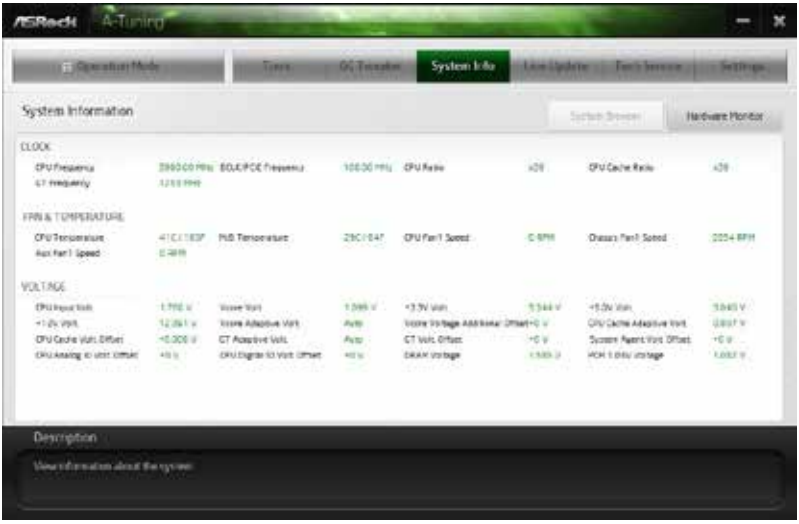

English

Live Update

Check for newer versions of BIOS, A-Tuning or drivers.

Tech Service

Contact Tech Service.

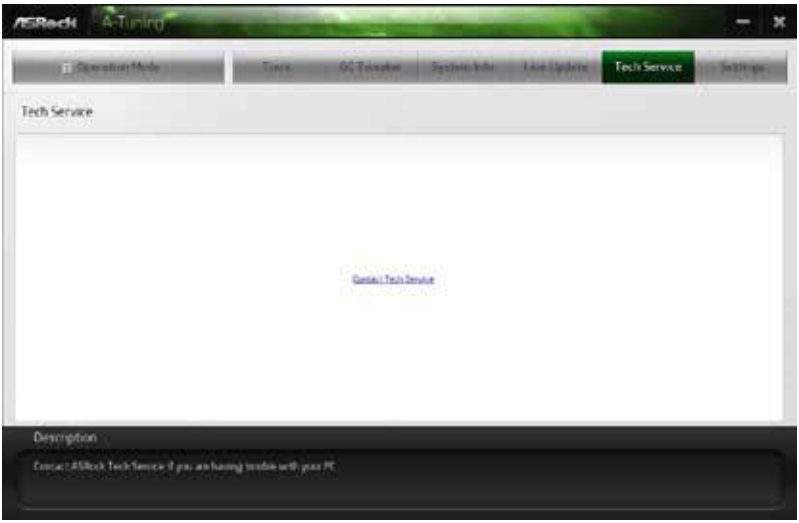

English

Settings

Configure ASRock A-Tuning.

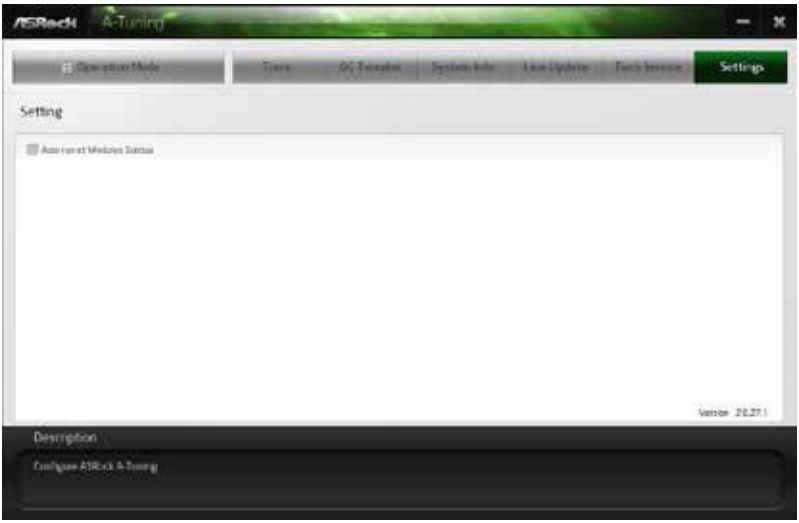

5.3 SBX Pro Studio

This section explains how to configure the Creative Sound Core3D using SBX Pro Studio.

Click the power button on the left to activate or deactivate.

Surround

Control the level of audio immersion in music, movies and games.

Crystalizer

Enhance music and movies to make them sound livelier.

Bass

Control the desired level of bass.

Crossover Frequency

Redirect all frequencies below this value to the optimal speaker for better bass response.

Smart Volume

Adjust the loudness of your audio playback automatically to minimize sudden volume changes.

Dialog Plus

Enhance the voices in movies for clearer dialog.

CRYSTALVOICE

Select a recording device

Mic Volume

Control the level of mic volume.

Mic Boost

Control the level of mic boost.

CrystalVoice

Click the power button on the left to activate or deactivate.

FX

Morph your voice into different characters and accents.

Smart Volume

Be heard clearly without having to shout or whisper.

Noise Reduction

Eliminate unwanted background noise in your conversation.

Acoustic Echo Cancellation

Eliminate echoes that interfere with your conversation.

SCOUT MODE

Scout Mode

Enable or disable scout mode. This proprietary technology allows you to hear your enemies from further away, giving you a distinct tactical advantage in combat.

Hot Key Configuration

Configure hot keys to enable or disable scout mode.

SPEAKERS/HEADPHONES

Speakers / Headphones Configuration

Select the device connected.

> *If there are both speakers and front headphones connected, please select the device you desire to use as audio output.*

Optional Speakers

Center

Enable or disable center speaker.

Subwoofer

Enable or disable subwoofer.

Rear pair

Enable or disable rear pair speakers.

Full-Range Speakers:

Select full-range speakers.

Bass Management

Bass Redirection

Enable or disable bass redirection.

Subwoofer Gain

Enable or disable subwoofer gain.

Crossover Frequency

Redirect all frequencies below this value to the optimal speaker for better bass response.

MIXER

Playback

Speakers

Control the level of speakers playback.

SPDIF-Out

Control the level of SPDIF-Out playback.

Balance

Control the level of various speaker's balance.

REC

What U Hear

Control the level of playback redirect.

EQUALIZER

EQ

Choose from Flat, Acoustic, Classical, Country, Dance, Jazz, New Age, Pop, Rock and Vocal.

JACK SETUP

Device Connected:

Select the device connected.

Show Jack Setup dialog when an audio jack is inserted

Enable or disable Jack Setup dialog.

ADVANCED FEATURES

Play stereo mix to digital output

Enable or disable play stereo mix to digital output.

PROFILE

English

User Profiles

You can save, load or delete your user profiles. The default is <Custom>.

Note

1. If you want to hear your own voice through the microphone (Playback mode). You can change your settings to "playback mode" by checking the "**Listen to this device**" box in **Control panel > Sound > Recording > Microphone > Properties > Listen**.

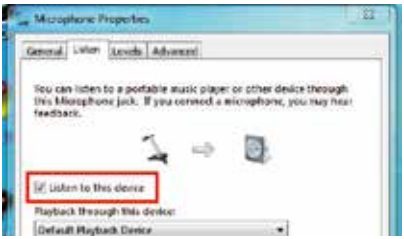

2. If you want to change your playback device to a SPDIF-Out device, go into **Control panel > Sound > Playback**, then right click on **SPDIF-Out** and check the "**Set as Default Device**" option.

5.4 Intel® Rapid Start Technology

Intel® Rapid Start Technology enables your system to wake up faster from deep sleep, saving time and power consumption. Feel secure to know that your system will resume to working condition even if an unexpected power loss happens while the PC is in sleep mode.

5.4.1 System Requirements

- Confirm whether your motherboard supports this feature.
- Operating system: Microsoft Windows 8/7 (32- or 64-bit edition)
- Set the SATA mode to AHCI. If Windows 8/7 is already installed under IDE mode, directly changing the SATA mode to AHCI may cause Windows 8/7 to crash while booting. If your system is not in AHCI mode, please follow the instructions below.

There are certain risks. Please backup any important data before operating to avoid loss.

1. Press **Win + R** simultaneously in Windows 8/7, type "Regedit" into the word box then click **OK**.

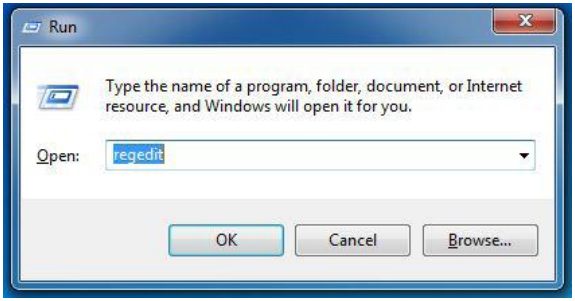

2. Enter into **HKEY_LOCAL_MACHINE\SYSTEM\CurrentControlSet\services\msahci** in Windows Registry Editor. Double click on the value **Start** and change the value from **3** into **0**. Click on **OK**.

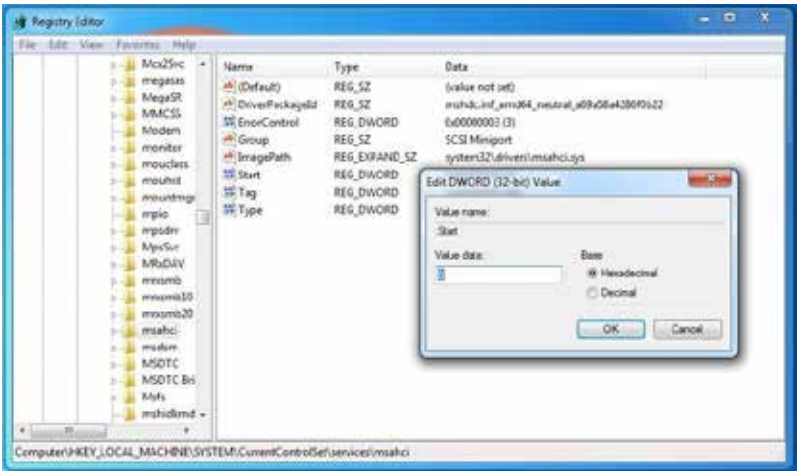

3. Exit the Registry Editor window and restart the computer.
4. Press **F2** to enter BIOS, then go to **Advanced** -> **Storage Configuration** and change SATA Mode to **AHCI**. Press **F10** to save changes and exit.
5. Enter Windows 8/7. Windows will discover the new device and install AHCI drivers automatically.

5.4.2 Setup Guide

Configuring Rapid Start

Step 1

Run ASRock Rapid Start utility from **Start** -> **All Programs** -> **ASRock Utility**.

Step 2

If you have more than one hard drives in your system, you must select one, then choose the **Partition Size** desired for your hidden partition and click on **Create**. The system will automatically create a hidden partition according to your settings. If there are SSD's installed into your system, it is recommended to create the partition on the SSD.

Step 3

When prompted to restart after the setup, click **Yes** to reboot.

Step 4

Double-click the Intel® Rapid Start Technology Manager icon in the Windows system tray.

English

Step 5

Make sure Rapid Start is on. Drag the slider to configure the time. For example, if the timer value is set to ten minutes, the system will enable Rapid Start mode after entering sleep state for ten minutes. If the timer is set to 0 minutes, Windows will immediately enable Rapid Start mode as it enters sleep state.

Using Rapid Start

1. You may shut down the computer without terminating the applications or files you are executing currently. Click on Windows Start -> the arrow next to Shut down, and click on **Sleep**.

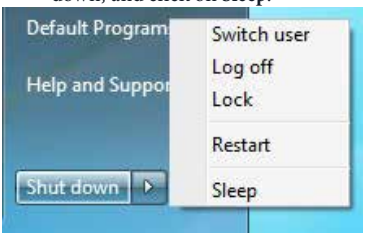

2. Windows system will enter sleep state.

3. According to your settings in Rapid Start Technology Manager, the system

will automatically wake up and enable Rapid Start mode after entering sleep state for a period of time. The power of the computer in Rapid Start mode can be cut off, it will not cause data loss of the programs or files you were executing before entering sleep state.

4. When you wish to continue to use the computer just hit the power button, the system will rapidly return to Windows, the programs and files which you were using before entering sleep state will be accessible immediately.

5.5 Intel® Smart Connect Technology

Intel® Smart Connect Technology is a feature that periodically wakes your computer from Windows® sleep state to refresh email or social networking applications. It saves your waiting time and keeps the content always up-to-date.

5.5.1 System Requirements

- Confirm whether your motherboard supports this feature.
- Operating system: Microsoft Windows 8/7 (32- or 64-bit edition)
- Set the SATA mode to AHCI. If Windows 8/7 is already installed under IDE mode, directly changing the SATA mode to AHCI may cause Windows 8/7 to crash while booting. If your system is not in AHCI mode, please follow the instructions below.

There are certain risks. Please backup any important data before operating to avoid loss.

1. Press **Win + R** simultaneously in Windows 8/7, type "Regedit" into the word box then click **OK**.

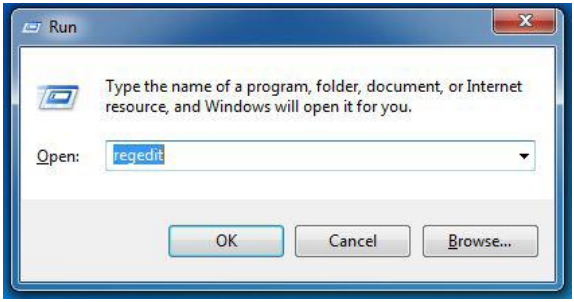

2. Enter into **HKEY_LOCAL_MACHINE\SYSTEM\CurrentControlSet\services\msahci** in Windows Registry Editor. Double click on the value **Start** and change the value from **3** into **0**. Click on **OK**.

5.5.2 Setup Guide

Installing ASRock Smart Connect Utility

Step 1

Install **ASRock Smart Connect Utility**, which is located in the folder at the following path of the Support CD: \ **ASRock Utility** > **Smart Connect**.

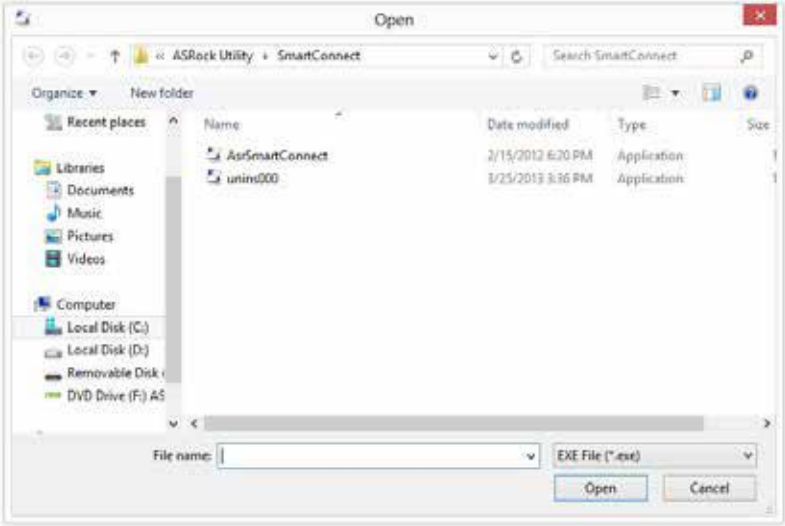

Step 2

Once installed, run ASRock Smart Connect from your desktop or go to Windows **Start -> All Programs -> ASRock Utility**.

English

Step 3

Click the **Add** button. Take Foxmail as an example, add Foxmail to the Application list.

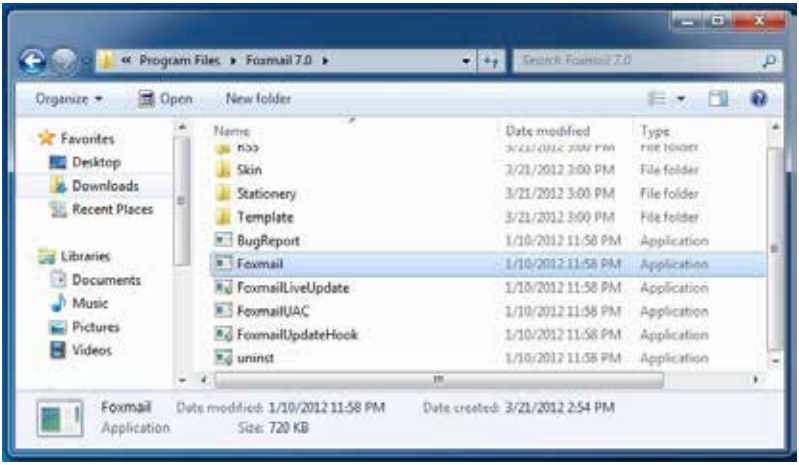

Step 4

Select Foxmail from the **Application List**, then click the arrow pointing right to add this application to the **Smart Connect List**.

Step 5

Click **Apply** to enable Smart Connect.

English

Step 6

Double-click the Intel® Smart Connect Technology Manager icon in the Windows system tray.

Step 7

Drag the slider to configure how often the system will connect to the network to download updates. Shorter durations will provide more frequent updates, but may cause more power consumption.

Using Smart Connect

1. Keep the applications which you wish to connect to the internet and receive updates while the system is in sleep state running. Foxmail for instance, keep Foxmail running.

2. Click on Windows Start -> the arrow next to Shut down, and click on **Sleep**.

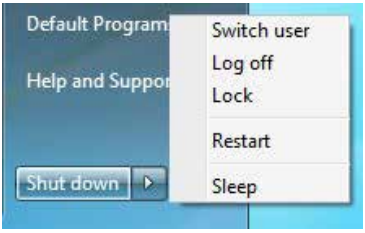

3. Windows system will enter sleep state.

4. The system will wake up from sleep state periodically, and then start to update Foxmail. The screen will not display anything so the computer can maintain minimum power usage. Afterwards, the system will automatically return to sleep state again.
5. Upon waking up the system, you will find the new mail that were sent to you during sleep state are already updated and ready to be read in Foxmail.

5.6 Intel® Remote Wake Technology

Intel® Remote Wake Technology allows you to use programs or services over the Internet to wake up your home computer from energy efficient sleep mode.

Before configuring this feature, verify the following.

- Remote Wake has been enabled in "Intel® Smart Connect Technology Manager".
- Make sure that the "PCI Device Power On" is enabled in UEFI SETUP UTILITY > Advanced > ACPI Configuration.

*Intel Remote Wake is supported on Win8 or Win8 64bit OS.

5.6.1 Configuring and Using MeshCentral

MeshCentral allows you to remotely wake up a PC from any network using a single web site. Just download and install the mesh agent on your computers and your computers will show up in the "My Devices" section of MeshCentral.com.

Creating a Mesh

Step 1

Login to Meshcentral.com.
If you have not created a MeshCentral acount, go to MeshCentral.com and create a new account.

English

Step 2

Click the "My Account" tab. Then click on "New" to create a new mesh.

Step 3

A new mesh window will pop up. Enter a mesh name and password.

Step 4

Select all the checkboxes and click **Create Mesh**.

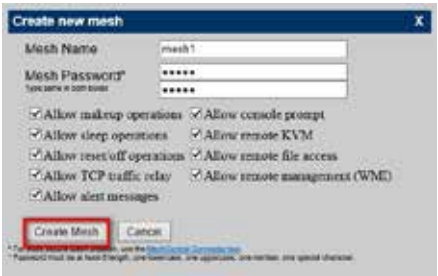

Downloading and Installing Mesh Agent

Step 1

Click Install on the My Account page.

Step 2

Select the mesh and download both files. Make sure both files are in the same directory.

Step 3

Right-click on MeshAgent.exe and select **Run as administrator**.

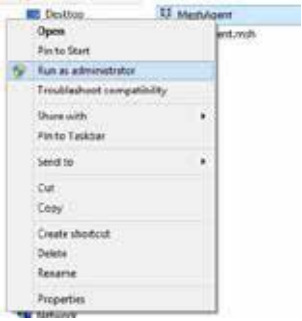

Step 4

Click **Install / Update**.

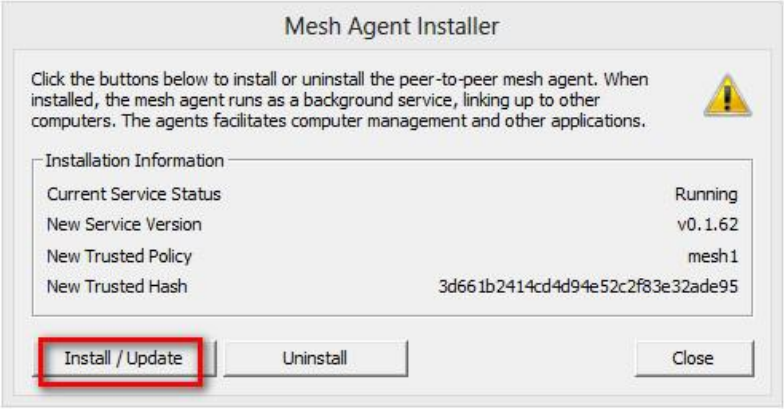

Step 5

Wait a minute for the New Machine to appear in "My Device".

English

Step 6

Check whether "Intel Remote Wake" appeared or not.

Waking up Your PC using PC

Step 1

On the "My Devices" page, click on **Power Actions**.

Step 2

Click on **Wake** or **Sleep.**

Waking up Your PC Using Mobile Device

Before waking up your home computer using a mobile device, please log out of MeshCentral on other previously used computers or devices.

Step 1

Login to meshcentral.com/m.

Step 2

Select a Machine.

Step 3

Click on **Wake** or **Sleep.**

Tutorial Video

5.6.2 Configuring and Using Splashtop

Splashtop is a remote desktop access software that lets you remotely access your home computer from your mobile device.

Before configuring this feature, verify that "Remote Wake" has been enabled in "Intel® Smart Connect Technology Manager".

Setup Guide

Step 1

Download and install the **Streamer** on your home computer, which is located in the folder at the following path of the Support CD: \ **ASRock Utility > Splashtop Streamer**. Then enter your Splashtop Account. If you have not created a Splashtop acount, create one.

Step 2

Download and install “Splashtop 2” on your mobile device and log into the app.

Using Remote Wakeup

Step 1

In "Splashtop 2”, tap the edit button next to an offline machine from the list.

Step 2

Tap "Wake up this computer".

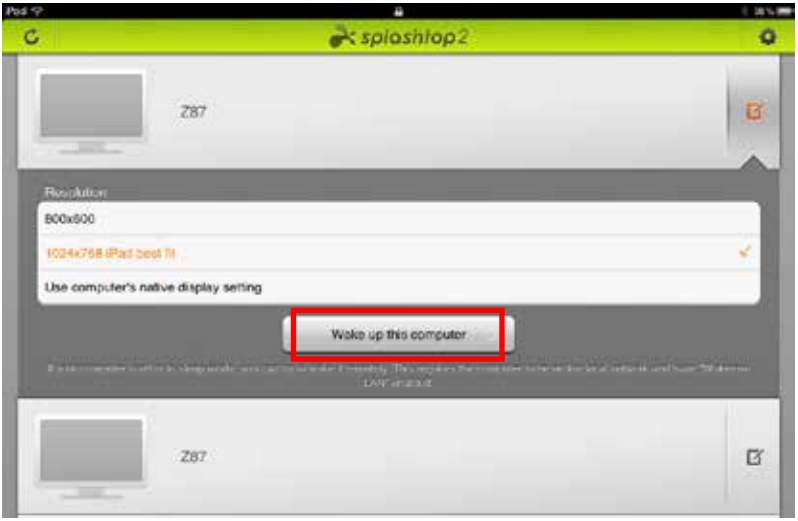

Using Remote Control

Step 1

In "Splashtop 2", tap an online machine from the list to connect to your home computer.

Step 2

Start remotely accessing your home computer.

The functionality and price of the Splashtop APP and subscription fee is subject to change. Please check www.splashtop.com for for details.

Accessing Data

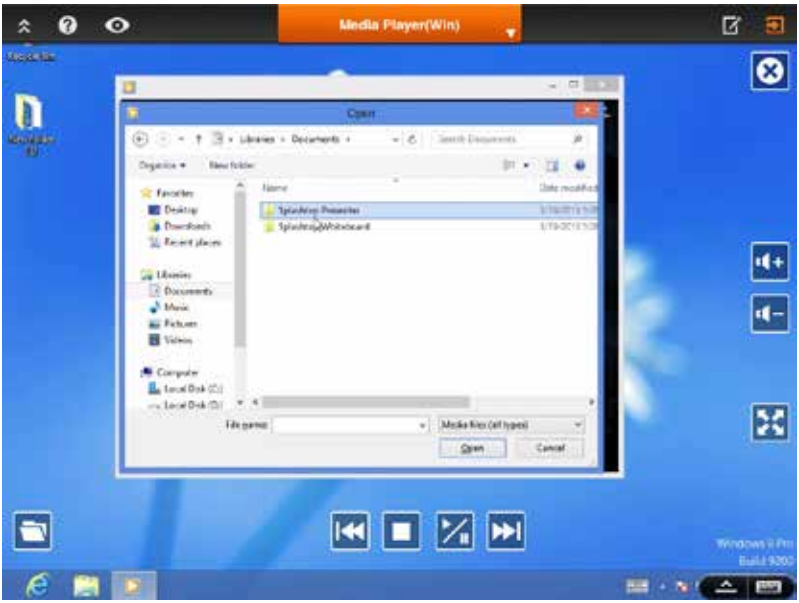

Playing Video

5.7 Start8

For those Windows 8 users who miss the Start Menu, Start8 is an ideal solution that brings back the familiar Start Menu along with added customizations for greater efficiency.

5.7.1 Installing Start8

Install **Start8**, which is located in the folder at the following path of the Support CD: \ **ASRock Utility** > **Start8**.

5.7.2 Configuring Start8

Style

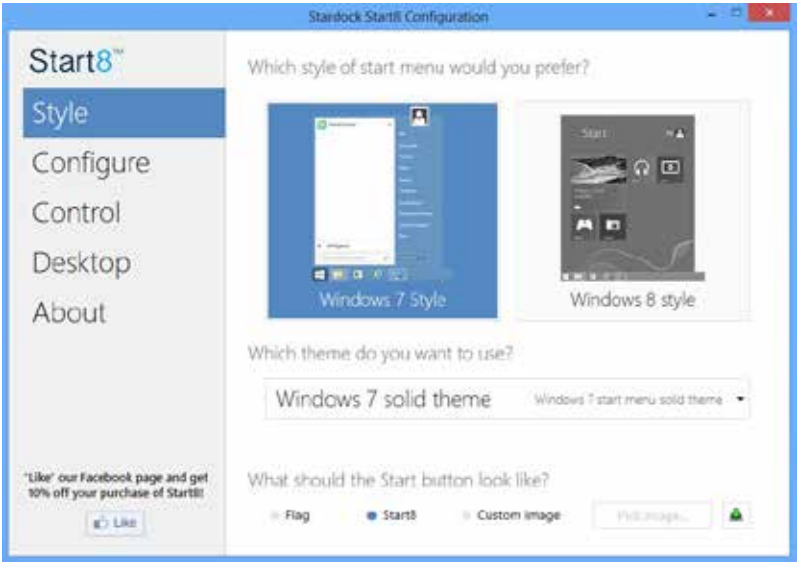

Select between the Windows 7 style and Windows 8 style Start Menu. Then select the theme of the Start Menu and customize the style of the Start icon.

English

Configure

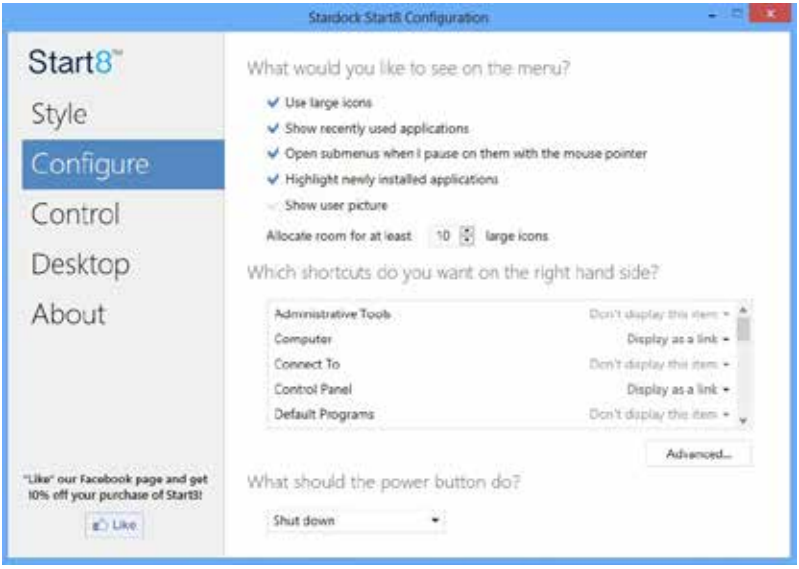

Configure provides configuration options, including icon sizes, which shortcuts you want Start Menu to display, quick access to recently used apps, the functionality of the power button, and more.

Control

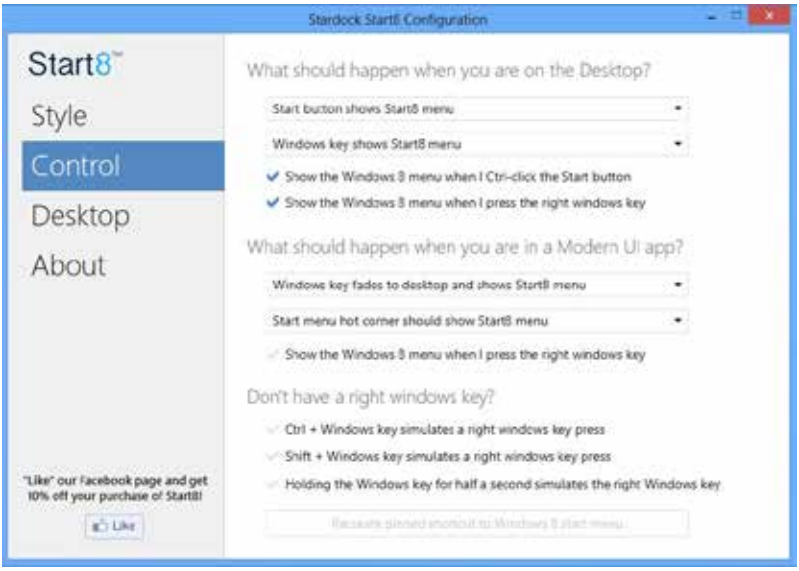

Control lets you configure what a click on the start button or a press on the Windows key does.

Desktop

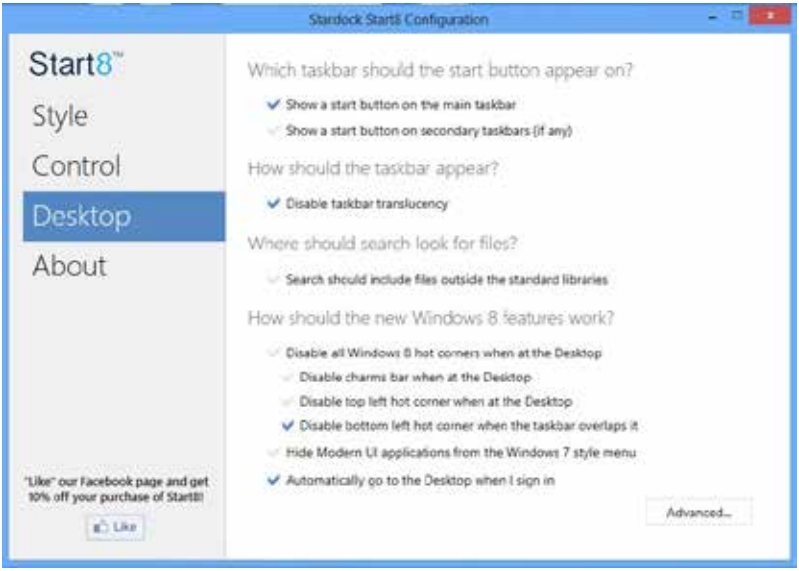

Desktop allows you to disable the hot corners when you are working on the desktop. It also lets you choose whether or not the system boots directly into desktop mode and bypass the Metro user interface.

About

Displays information about Start8.

5.8 XSplit Broadcaster

XSplit Broadcaster is a desktop application designed to make your gameplay broadcasting, live-streaming and recording a lot easier and more fun to do, we are giving away the 3 months premium license which is worth US$24.95 for free!

5.8.1 Live Streaming Your Gameplay

Step 1

Go to **Start** > **All Programs** > **XSplit** > **XSplit Broadcaster** to launch it.

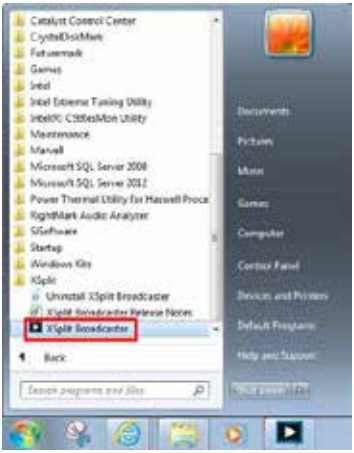

Step 2

Log in with your own username and password. (If you do not have an XSplit account, click **No XSplit account?** to register.)

Step 3

Go to **Broadcast > Add Channels….**

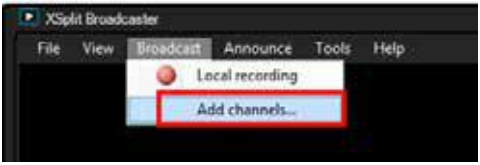

Step 4

Click **Add….**

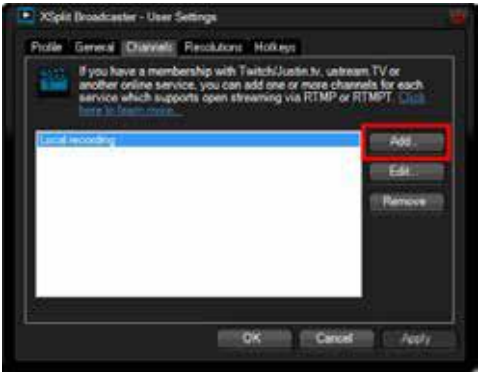

Step 5

Select a platform for live streaming.

*Before you start streaming, you need to register an account for the streaming service website, such as Twitch.tv, USTREAM, or other livestreaming services.

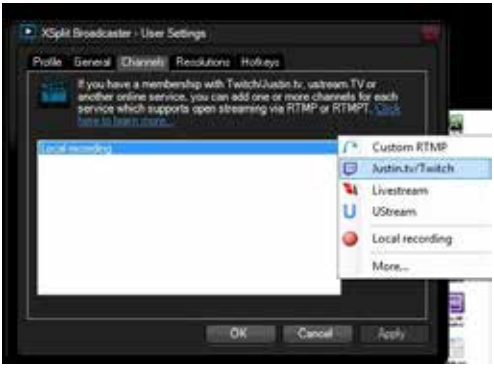

English

Step 6

Fill in your platform's **Username** and **Password**.

Based on your needs, configure the Video and Audio Encoding settings. Click **OK**.

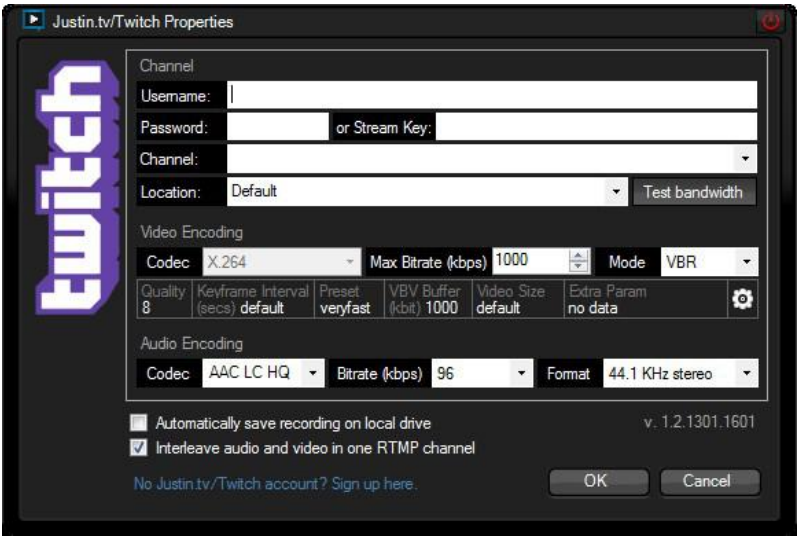

Step 7

The channel then appears in your broadcast list. Click **Apply** and **OK** to save the settings.

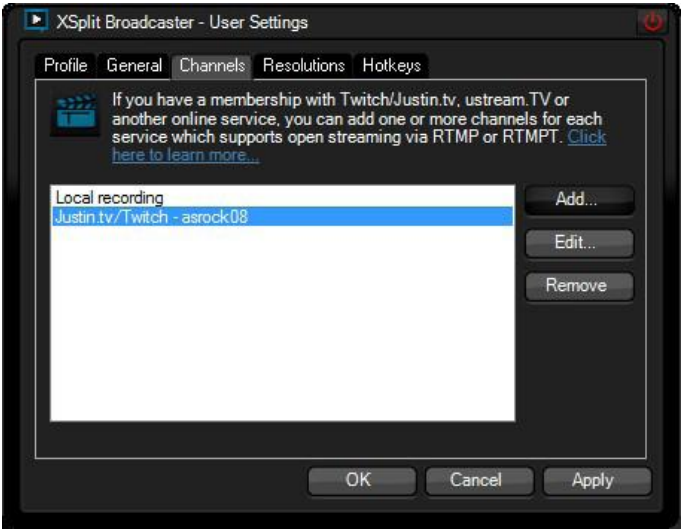

Step 8

Go to **Broadcast** and select the platform to enable live streaming.

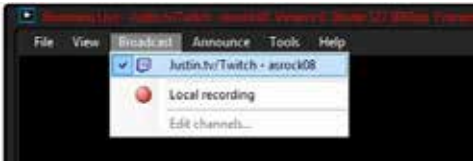

A link to view your live Broadcast has been copied for you automatically. Simply press CTRL-V or right click and choose Paste to paste the link into the browser, and you can see your broadcast.

To disable live streaming, go to **Broadcast** again and deselect the platform.

5.7.2 Recording Your Gameplay

Step 1

Go to **Broadcast** > **Local recording** to start recording.

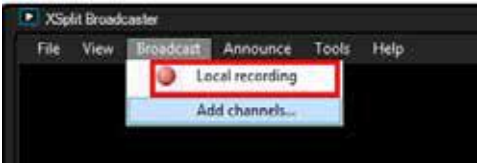

Step 2

To stop recording, Go to **Broadcast** again and deselect **Local recording**.

Step 3

Go to **Tools** > **My Recordings...**to access your recordings

Chapter 6 UEFI SETUP UTILITY

6.1 Introduction

ASRock Interactive UEFI is a blend of system configuration tools, cool sound effects and stunning visuals. Not only will it make BIOS setup less difficult but also a lot more amusing. This section explains how to use the UEFI SETUP UTILITY to configure your system. You may run the UEFI SETUP UTILITY by pressing <F2> or <Del> right after you power on the computer, otherwise, the Power-On-Self-Test (POST) will continue with its test routines. If you wish to enter the UEFI SETUP UTILITY after POST, restart the system by pressing <Ctl> + <Alt> + <Delete>, or by pressing the reset button on the system chassis. You may also restart by turning the system off and then back on.

Because the UEFI software is constantly being updated, the following UEFI setup screens and descriptions are for reference purpose only, and they may not exactly match what you see on your screen.

6.1.1 UEFI Menu Bar

The top of the screen has a menu bar with the following selections:

Main	For setting system time/date information
OC Tweaker	For overclocking configurations
Advanced	For advanced system configurations
Tool	Useful tools
H/W Monitor	Displays current hardware status
Boot	For configuring boot settings and boot priority
Security	For security settings
Exit	Exit the current screen or the UEFI Setup Utility

6.1.2 Navigation Keys

Use <←> key or <→> key to choose among the selections on the menu bar, and use < ↑ > key or < ↓ > key to move the cursor up or down to select items, then press <Enter> to get into the sub screen. You can also use the mouse to click your required item.

Please check the following table for the descriptions of each navigation key.

Navigation Key(s)	Description
+ / -	To change option for the selected items
<Tab>	Switch to next function
<PGUP>	Go to the previous page
<PGDN>	Go to the next page
<HOME>	Go to the top of the screen
<END>	Go to the bottom of the screen
<F1>	To display the General Help Screen
<F4>	Toggle sound on/off
<F7>	Discard changes and exit the SETUP UTILITY
<F9>	Load optimal default values for all the settings
<F10>	Save changes and exit the SETUP UTILITY
<F12>	Print screen
<ESC>	Jump to the Exit Screen or exit the current screen

6.2 Main Screen

When you enter the UEFI SETUP UTILITY, the Main screen will appear and display the system overview.

Active Page on Entry

Select the default page when entering the UEFI setup utility.

UEFI Guide

UEFI Guide is a quick tutorial for ASRock's UEFI setup Utility. You may abort the tutorial by pressing "esc".

6.3 OC Tweaker Screen

In the OC Tweaker screen, you can set up overclocking features.

Because the UEFI software is constantly being updated, the following UEFI setup screens and descriptions are for reference purpose only, and they may not exactly match what you see on your screen.

Load Optimized GPU OC Setting

You can use this option to load optimized GPU overclocking setting. Please note that overclocing may cause damage to your GPU and motherboard. It should be done at your own risk and expense. This option appears only when you adopt K-Series CPU.

CPU Configuration

CPU Ratio

The CPU speed is determined by the CPU Ratio multiplied with the BCLK. Increasing the CPU Ratio will increase the internal CPU clock speed without affecting the clock speed of other components.

CPU Cache Ratio

The CPU Internal Bus Speed Ratio. The maximum should be the same as the CPU Ratio.

BCLK/PCIE Frequency

The CPU speed is determined by the CPU Ratio multiplied with the BCLK. Increasing the BCLK will increase the internal CPU clock speed but also affect the clock speed of other components.

Spread Spectrum

Enable Spread Spectrum to reduce electromagnetic interference for passing EMI tests. Disable to achieve higher clock speeds when overclocking.

Intel SpeedStep Technology

Intel SpeedStep technology allows processors to switch between multiple frequencies and voltage points for better power saving and heat dissipation.

Intel Turbo Boost Technology

Intel Turbo Boost Technology enables the processor to run above its base operating frequency when the operating system requests the highest performance state.

Filter PLL Frequency

CPU BCLK Filter Frequency. Choose 1.6 for better overclocking capabilities.

Long Duration Power Limit

Configure Package Power Limit 1 in watts. When the limit is exceeded, the CPU ratio will be lowered after a period of time. A lower limit can protect the CPU and save power, while a higher limit may improve performance.

Long Duration Maintained

Configure the period of time until the CPU ratio is lowered when the Long Duration Power Limit is exceeded.

Short Duration Power Limit

Configure Package Power Limit 2 in watts. When the limit is exceeded, the CPU ratio will be lowered immediately. A lower limit can protect the CPU and save power, while a higher limit may improve performance.

Primary Plane Current Limit

Configure the current limit of the CPU under Turbo Mode in ampere. A lower limit can protect the CPU and save power, while a higher limit may improve performance.

GT Frequency

Configure the frequency of the integrated GPU.

GT Voltage Mode

Auto: For optimized settings.

Adaptive: Add voltage to the integrated GPU when the system is under heavy load.

Override: The voltage is fixed.

GT Adaptive Voltage

Configure the fixed voltage added to the integrated GPU.

GT Voltage Offset

Configure the voltage added to the integrated GPU when the system is under heavy load.

DRAM Timing Configuration

DRAM Reference Clock

Select Auto for optimized settings.

DRAM Frequency

If [Auto] is selected, the motherboard will detect the memory module(s) inserted and assign the appropriate frequency automatically.

DRAM Configuration

DRAM Tweaker

Fine tune the DRAM settings by leaving marks in checkboxes. Click OK to confirm and apply your new settings.

CAS# Latency (tCL)

The time between sending a column address to the memory and the beginning of the data in response.

RAS# to CAS# Delay (tRCD)

The number of clock cycles required between the opening of a row of memory and accessing columns within it.

Row Precharge Time (tRP)

The number of clock cycles required between the issuing of the precharge command and opening the next row.

RAS# Active Time (tRAS)

The number of clock cycles required between a bank active command and issuing the precharge command.

Command Rate (CR)

The delay between when a memory chip is selected and when the first active command can be issued.

Write Recovery Time (tWR)

The amount of delay that must elapse after the completion of a valid write operation, before an active bank can be precharged.

Refresh Cycle Time (tRFC)

The number of clocks from a Refresh command until the first Activate command to the same rank.

RAS to RAS Delay (tRRD)

The number of clocks between two rows activated in different banks of the same rank.

Write to Read Delay (tWTR)

The number of clocks between the last valid write operation and the next read command to the same internal bank.

Read to Precharge (tRTP)

The number of clocks that are inserted between a read command to a row pre-charge command to the same rank.

Four Activate Window (tFAW)

The time window in which four activates are allowed the same rank.

CAS Write Latency (tCWL)

Configure CAS Write Latency.

tREFI

Configure refresh cycles at an average periodic interval.

tCKE

Configure the period of time the DDR3 initiates a minimum of one refresh command internally once it enters Self-Refresh mode.

tRDRD

Configure between module read to read delay.

tRDRDDR

Configure between module read to read delay from different ranks.

tRDRDDD

Use this to change DRAM tRWSR Auto/Manual settings. The default is [Auto].

tWRRD

Configure between module write to read delay.

tWRRDDR

Configure between module write to read delay from different ranks.

tWRRDDD

Use this to change DRAM tRRSR Auto/Manual settings. The default is [Auto].

Configure between module write to read delay from different DIMMs.

tWRWR

Configure between module write to write delay.

tWRWRDR

Configure between module write to write delay from different ranks.

tWRWRDD

Configure between module write to write delay from different DIMMs.

tRDWR

Configure between module read to write delay.

tRDWRDR

Configure between module read to write delay from different ranks.

tRDWRDD

Configure between module read to write delay from different DIMMs.

RTL (CHA)

Configure round trip latency for channel A.

RTL (CHB)

Configure round trip latency for channel B.

IO-L (CHA)

Configure IO latency for channel A.

IO-L (CHB)

Configure IO latency for channel B.

ODT WR (CHA)

Configure the memory on die termination resistors' WR for channel A.

ODT WR (CHB)

Configure the memory on die termination resistors' WR for channel B.

ODT NOM (CHA)

Use this to change ODT (CHA) Auto/Manual settings. The default is [Auto].

ODT NOM (CHB)

Use this to change ODT (CHB) Auto/Manual settings. The default is [Auto].

Command Tri State

Enable for DRAM power saving.

MRC Fast Boot

Enable Memory Fast Boot to skip DRAM memory training for booting faster.

FIVR Configuration

FIVR Switch Frequency Signature

Select whether to boost or lower the FIVR Switch Frequency.

FIVR Switch Frequency Offset

Configure the percentage of frequency boost or deduction.

CPU Voltage Mode

Auto: For optimized settings.

Adaptive: Add voltage to the CPU when the system is under heavy load.

Override: The voltage is fixed.

CPU Override Voltage

Configure the voltage added to the CPU when the system is under heavy load.

CPU Voltage Offset

Configure the dynamic CPU voltage added to the CPU.

CPU Cache Override Voltage

Add voltage to the CPU Cache when the system is under heavy load.

CPU Cache Adaptive Voltage

Configure the voltage added to the CPU Cache when the system is under heavy load.

CPU Cache Voltage Offset

Configure the voltage for the CPU Cache. Setting the voltage higher may increase system stability when overclocking.

System Agent Voltage Offset

Configure the voltage for the System Agent. Setting the voltage higher may increase system stability when overclocking.

CPU Analog IO Voltage Offset

CPU I/O Analog Voltage.

CPU Digital IO Voltage Offset

CPU I/O Digital Voltage.

CPU Integrated VR Faults

Disable FIVR Faults to raise the threshold to trigger CPU over current protection and over voltage protection for better overclocking capabilities.

CPU Integrated VR Efficiency Mode

Enable FIVR Efficiency Management for power saving. Disable for better performance and overclocking capabilities.

Voltage Configuration

CPU Input Voltage

Configure the voltage for the CPU.

CPU Load-Line Calibration

CPU Load-Line Calibration helps prevent CPU voltage droop when the system is under heavy load.

VCORE External Offset

The fixed external voltage input to the CPU.

DRAM Voltage

Use this to configure DRAM Voltage. The default value is [Auto].

PCH 1.05V Voltage

Chipset 1.05V Voltage. Use default settings for best performance.

PCH 1.5V Voltage

I/O 1.5V Voltage. Use default settings for best performance.

6.4 Advanced Screen

In this section, you may set the configurations for the following items: CPU Configuration, Chipset Configuration, Storage Configuration, Intel® Rapid Start Technology, Intel® Smart Connect Technology, ACPI Configuration and USB Configuration.

Setting wrong values in this section may cause the system to malfunction.

English

6.4.1 CPU Configuration

Active Processor Cores

Select the number of cores to enable in each processor package.

CPU C States Support

Enable CPU C States Support for power saving. It is recommended to keep C3, C6 and C7 all enabled for better power saving.

Enhanced Halt State (C1E)

Enable Enhanced Halt State (C1E) for lower power consumption.

CPU C3 State Support

Enable C3 sleep state for lower power consumption.

CPU C6 State Support

Enable C6 deep sleep state for lower power consumption.

CPU C7 State Support

Enable C7 deep sleep state for lower power consumption.

Package C State Support

Enable CPU, PCIe, Memory, Graphics C State Support for power saving.

CPU Thermal Throttling

Enable CPU internal thermal control mechanisms to keep the CPU from overheating.

No-Execute Memory Protection

Processors with No-Execution Memory Protection Technology may prevent certain classes of malicious buffer overflow attacks.

Intel Virtualization Technology

Intel Virtualization Technology allows a platform to run multiple operating systems and applications in independent partitions, so that one computer system can function as multiple virtual systems.

Hardware Prefetcher

Automatically prefetch data and code for the processor. Enable for better performance.

Adjacent Cache Line Prefetch

Automatically prefetch the subsequent cache line while retrieving the currently requested cache line. Enable for better performance.

6.4.2 Chipset Configuration

Primary Graphics Adapter

Select a primary VGA.

VT-d

Intel® Virtualization Technology for Directed I/O helps your virtual machine monitor better utilize hardware by improving application compatibility and reliability, and providing additional levels of manageability, security, isolation, and I/O performance.

PCIE1 Link Speed

Select the link speed for PCIE1.

Share Memory

Configure the size of memory that is allocated to the integrated graphics processor when the system boots up.

IGPU Multi-Monitor

Select disable to disable the integrated graphics when an external graphics card is installed. Select enable to keep the integrated graphics enabled at all times.

Render Standby

Power down the render unit when the GPU is idle for lower power consumption.

Onboard HD Audio

Enable/disable onboard HD audio. Set to Auto to enable onboard HD audio and automatically disable it when a sound card is installed.

Front Panel

Enable/disable front panel HD audio.

Onboard HDMI HD Audio

Enable audio for the onboard digital outputs.

Onboard LAN

Enable or disable the onboard network interface controller.

Deep Sleep

Configure deep sleep mode for power saving when the computer is shut down.

Restore on AC/Power Loss

Select the power state after a power failure. If [Power Off] is selected, the power will remain off when the power recovers. If [Power On] is selected, the system will start to boot up when the power recovers.

Good Night LED

By enabling Good Night LED, the Power/HDD LEDs will be switched off when the system is on. It will also automatically switch off the Power and Keyboard LEDs when the system enters into Standby/Hibernation mode.

WAN1 Radio

Enable/disable the WiFi module's connectivity.

6.4.3 Storage Configuration

SATA Controller(s)

Enable/disable the SATA controllers.

SATA Mode Selection

IDE: For better compatibility.

AHCI: Supports new features that improve performance.

RAID: Combine multiple disk drives into a logical unit.

AHCI (Advanced Host Controller Interface) supports NCQ and other new features that will improve SATA disk performance but IDE mode does not have these advantages.

SATA Aggressive Link Power Management

SATA Aggressive Link Power Management allows SATA devices to enter a low power state during periods of inactivity to save power. It is only supported by AHCI mode.

Dynamic Storage Accelerator

Keep this option enabled for higher HDD and SDD I/O performance, lower latency and increased system responsiveness.

Hard Disk S.M.A.R.T.

S.M.A.R.T stands for Self-Monitoring, Analysis, and Reporting Technology. It is a monitoring system for computer hard disk drives to detect and report on various indicators of reliability.

6.4.4 Intel® Rapid Start Technology

Intel® Rapid Start Technology

Intel® Rapid Start Technology is a new zero power hibernation mode which allows users to resume in just 5-6 seconds.

6.4.5 Intel® Smart Connect Technology

Intel® Smart Connect Technology

Intel® Smart Connect Technology automatically updates your email and social networks, such as Twitter, Facebook, etc. while the computer is in sleep mode.

6.4.6 ACPI Configuration

Suspend to RAM

It is recommended to select auto for ACPI S3 power saving.

Check Ready Bit

Enable to enter the operating system after S3 only when the hard disk is ready, this is recommended for better system stability.

ACPI HPET Table

Enable the High Precision Event Timer for better performance and to pass WHQL tests.

PCIE Devices Power On

Allow the system to be waked up by a PCI device and enable wake on LAN.

Wake From Onboard LAN

Allow the system to be waked up by the Onboard Intel I217V LAN.

RTC Alarm Power On

Allow the system to be waked up by the real time clock alarm. Set it to By OS to let it be handled by your operating system.

USB Keyboard/Remote Power On

Allow the system to be waked up by an USB keyboard or remote controller.

USB Mouse Power On

Allow the system to be waked up by an USB mouse.

6.4.7 USB Configuration

USB Controller

Enable or disable all the USB ports.

USB 3.0 Controller

Enable or disable all the USB 3.0 ports.

Legacy USB Support

Enable or disable Legacy OS Support for USB 2.0 devices. If you encounter USB compatibility issues it is recommended to disable legacy USB support. Select UEFI Setup Only to support USB devices under the UEFI setup and Windows/Linux operating systems only.

Legacy USB 3.0 Support

Enable or disable Legacy OS Support for USB 3.0 devices.

6.5 Tools

System Browser

ASRock System Browser shows the overview of your current PC and the devices connected.

OMG (Online Management Guard)

Administrators are able to establish an internet curfew or restrict internet access at specified times via OMG. You may schedule the starting and ending hours of internet access granted to other users. In order to prevent users from bypassing OMG, guest accounts without permission to modify the system time are required.

UEFI Tech Service

Contact ASRock Tech Service if you are having trouble with your PC. Please setup network configuration before using UEFI Tech Service.

Easy RAID Installer

Easy RAID Installer helps you to copy the RAID driver from the support CD to your USB storage device. After copying the drivers please change the SATA mode to RAID, then you can start installing the operating system in RAID mode.

English

Easy Driver Installer

For users that don't have an optical disk drive to install the drivers from our support CD, Easy Driver Installer is a handy tool in the UEFI that installs the LAN driver to your system via an USB storage device, then downloads and installs the other required drivers automatically.

Instant Flash

Save UEFI files in your USB storage device and run Instant Flash to update your UEFI.

Internet Flash

ASRock Internet Flash downloads and updates the latest UEFI firmware version from our servers for you. Please setup network configuration before using Internet Flash.

*For BIOS backup and recovery purpose, it is recommended to plug in your USB pen drive before using this function.

Network Configuration

Use this to configure internet connection settings for Internet Flash.

Internet Setting

Enable or disable sound effects in the setup utility.

English

UEFI Download Server

Select a server to download the UEFI firmware.

Dehumidifier Function

If Dehumidifier Function is enabled, the computer will power on automatically to dehumidify the system after entering S4/S5 state.

Dehumidifier Period

Configure the period of time until the computer powers on and enables Dehumidifier after entering S4/S5 state.

Dehumidifier Duration

Configure the duration of the dehumidifying process before it returns to S4/S5 state.

Dehumidifier CPU Fan Setting

Configure the speed of the CPU fan while Dehumidifier is enabled. The higher the value, the faster the fan speed.

Max: 255

Min: 1

Save User Default

Type a profile name and press enter to save your settings as user default.

Load User Default

Load previously saved user defaults.

6.6 Hardware Health Event Monitoring Screen

This section allows you to monitor the status of the hardware on your system, including the parameters of the CPU temperature, motherboard temperature, fan speed and voltage.

CPU Fan 1 Setting

Select a fan mode for CPU Fans 1, or choose Customize to set 5 CPU temperatures and assign a respective fan speed for each temperature.

Chassis Fan 1 Setting

Select a fan mode for Chassis Fan 1, or choose Customize to set 5 CPU temperatures and assign a respective fan speed for each temperature.

Over Temperature Protection

When Over Temperature Protection is enabled, the system automatically shuts down when the motherboard is overheated.

Case Open Feature

Enable or disable Case Open Feature to detect whether the chassis cover has been removed.

6.7 Boot Screen

This section displays the available devices on your system for you to configure the boot settings and the boot priority.

Fast Boot

Fast Boot minimizes your computer's boot time. In fast mode you may not boot from an USB storage device. Ultra Fast mode is only supported by Windows 8 and the VBIOS must support UEFI GOP if you are using an external graphics card. Please notice that Ultra Fast mode will boot so fast that the only way to enter this UEFI Setup Utility is to Clear CMOS or run the Restart to UEFI utility in Windows.

Boot From Onboard LAN

Allow the system to be waked up by the onboard LAN.

Setup Prompt Timeout

Configure the number of seconds to wait for the setup hot key.

Bootup Num-Lock

Select whether Num Lock should be turned on or off when the system boots up.

English

Boot Beep

Select whether the Boot Beep should be turned on or off when the system boots up. Please note that a buzzer is needed.

Full Screen Logo

Enable to display the boot logo or disable to show normal POST messages.

AddOn ROM Display

Enable AddOn ROM Display to see the AddOn ROM messages or configure the AddOn ROM if you've enabled Full Screen Logo. Disable for faster boot speed.

Boot Failure Guard

If the computer fails to boot for a number of times the system automatically restores the default settings.

Boot Failure Guard Count

Configure the number of attempts to boot until the system automatically restores the default settings.

CSM (Compatibility Support Module)

CSM

Enable to launch the Compatibility Support Module. Please do not disable unless you're running a WHCK test. If you are using Windows 8 64-bit and all of your devices support UEFI, you may also disable CSM for faster boot speed.

Launch PXE OpROM Policy

Select UEFI only to run those that support UEFI option ROM only. Select Legacy only to run those that support legacy option ROM only. Do not launch?

Launch Storage OpROM Policy

Select UEFI only to run those that support UEFI option ROM only. Select Legacy only to run those that support legacy option ROM only. Do not launch?

Launch Video OpROM Policy

Select UEFI only to run those that support UEFI option ROM only. Select Legacy only to run those that support legacy option ROM only. Do not launch?

6.8 Security Screen

In this section you may set or change the supervisor/user password for the system. You may also clear the user password.

Supervisor Password

Set or change the password for the administrator account. Only the administrator has authority to change the settings in the UEFI Setup Utility. Leave it blank and press enter to remove the password.

User Password

Set or change the password for the user account. Users are unable to change the settings in the UEFI Setup Utility. Leave it blank and press enter to remove the password.

Secure Boot

Enable to support Windows 8 Secure Boot.

6.9 Exit Screen

Save Changes and Exit

When you select this option the following message, "Save configuration changes and exit setup?" will pop out. Select [OK] to save changes and exit the UEFI SETUP UTILITY.

Discard Changes and Exit

When you select this option the following message, "Discard changes and exit setup?" will pop out. Select [OK] to exit the UEFI SETUP UTILITY without saving any changes.

Discard Changes

When you select this option the following message, "Discard changes?" will pop out. Select [OK] to discard all changes.

Load UEFI Defaults

Load UEFI default values for all options. The F9 key can be used for this operation.

Launch EFI Shell from filesystem device

Copy shellx64.efi to the root directory to launch EFI Shell.

1 簡介

感謝您購買 M8，本電競準系統經 ASRock 嚴格品管製作，是一套讓人信賴的可靠產品。本產品採耐用設計所展現的優異效能，完全符合 ASRock 對品質及耐用度的承諾。

由於硬體規格可能會更新，所以本文件內容如有變更，恕不另行通知。如本文件有任何修改，可至 ASRock 網站逕行取得更新版本，不另外通知。若您需要與本產品相關的技術支援，請上我們的網站瞭解有關您使用機型的特定資訊。 ASRock 網站：http://www.asrock.com。

1.1 包裝內容

- M8 準系統內含：
  M8 機殼
  Mini-ITX 主機板 (預先安裝)
  電源供應器單元 (預先安裝)
  系統風扇 (預先安裝)
- AC 電源線
- 六角螺絲起子
- 螺絲起子組
- 螺絲包
- 機殼鎖鑰匙
- 顯卡支架
- 6 x SATA 線
- 支援光碟
- 快速安裝指南
- 使用手冊

如缺少任何項目或任何項目受損，請洽授權經銷商。

1.2 產品規格

色彩	• 暴風黑
材質	• 鋼材 / 鋁合金 + 塑膠
尺寸	• 372 公釐 (寬) x 123 公釐 (高) x 400 公釐 (長)
主機板	• ASRock Z87-M8
CPU	• 支援第 4 代 Intel® Core™ i7 / i5 / i3 / Xeon® / Pentium® / Celeron® 處理器系列
記憶體	• 支援 DDR3 1600/1333/1066 MHz，2 x SO-DIMM 插槽，最大 16GB
VGA	• 支援 1 x 雙槽顯示卡
光碟機	• 1 x 薄型吸入式 Super-Multi 光碟機
硬碟	• 支援 3.5 吋硬碟與 2.5 吋硬碟
WiFi + BT	• 2T2R WiFi 802.11ac + BT v4.0
前置 I/O	• 4 x USB 3.0、1 x MIC、1 x 耳機 • 4 合 1 讀卡機 (SD3.0/MMC/MS/MS PRO)
後置 I/O	• 1 x 7.1HD 音訊 (採用 Creative Sound Core3D)、 • 1 x Intel Gigabit LAN、4 x USB3.0、4 x USB2.0、 • 1 x eSATA2、1 x DP、1 x HDMI
萬用 OLED 按鈕	• A-Command
散熱	• 頂部：2 x 70mm 風扇，底部：2 x 70mm 風扇
電源供應器	• SFX PSU 450W

2 產品概述

本章提供 M8 重要元件位置的圖示。

2.1 前視圖

編號	說明
1	A-Command (萬用 OLED 按鈕)
2	光碟機退出按鈕
3	4 x USB 3.0 連接埠
4	4 合 1 讀卡機 (SD3.0/MMC/MS/MS PRO)
5	麥克風插孔
6	耳機插孔

2.1.1 A-Command 的功能

A-Command 為多用途控制器旋鈕，用於切換各種不同的功能。

控制 A-Command

- 轉動旋鈕，即可切換主要功能或選項。
- 按一下即可確認選擇。

系統開機

按下 A-Command 即可將系統開機。等候作業系統自動載入。

系統關機

OLED 顯示 M8 標誌 / 日期與時間時，按下 A-Command 再選擇「是」關閉系統電源。

進入 Windows 之前

進入作業系統之前，共有三項主要功能。

- **M8 標誌 / 日期與時間：**
  標誌出現十秒後，畫面即顯示日期與時間。
  若讓顯示器閒置 5 分鐘，顯示器將熄滅。
- **燈光：**
  開啟 / 關閉機殼內的燈光。
- **時間：**
  開啟 / 關閉時間。
  若此選項設為開，便可使用 M8 標誌 / 日期與時間畫面。若此選項設為關，便會隱藏 M8 標誌 / 日期與時間畫面。

在 Windows 下：

進入作業系統之後，共有六項主要功能。

- **M8 標誌 / 日期與時間：**
  標誌出現十秒後，畫面即顯示日期與時間。
  若讓顯示器閒置 5 分鐘，顯示器將熄滅。

- **音量：**
  左右轉動旋鈕，即可增加 / 減少音量。

- **模式：**
  切換三種電源管理模式 – 節能、標準或高速。

- **資訊：**
  切換各種不同的關鍵資訊類型，以檢查系統狀態。OLED 畫面顯示 CPU 頻率、CPU 使用率、LAN 使用率或 APM* 資料。
  *APM (每分鐘操作數) 測量您可在一分鐘內執行多少次的鍵盤 / 滑鼠按一下動作。若要瞭解自己手指的移動速度，請按一下 A-Command 開始計算 APM。再按一下 A-Command，即可停止計算。

- **燈光：**
  開啟 / 關閉機殼內的燈光，或啟用 Good Night LED (晚安 LED) 功能 *。
  開：開啟機殼內的燈光
  關：關閉機殼內的燈光
  全關：關閉機殼內的燈光；啟用 Good Night LED (晚安 LED) 功能
  *ASRock Good Night LED (晚安 LED) 技術會將不必要的 LED 關閉，以營造更好的睡眠環境。啟用 Good Night LED (晚安 LED) 後，電源 /HDD LED 將在系統開啟時關閉。系統進入待命／休眠模式時，Good Night LED (晚安 LED) 功能也會自動關閉電源及鍵盤 LED。

- **時間：**
  開啟 / 關閉時間。
  若此選項設為開，便可使用 M8 標誌 / 日期與時間畫面。若此選項設為關，便會隱藏 M8 標誌 / 日期與時間畫面。

2.2 後視圖

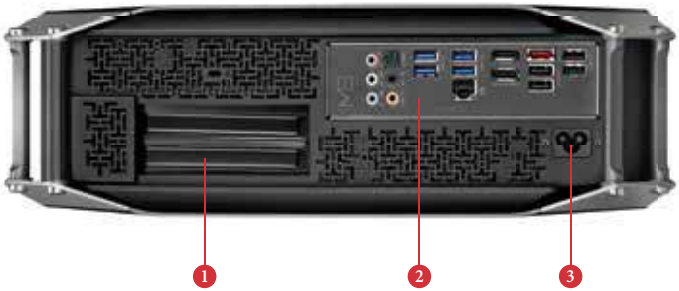

編號	說明
1	PCIe 插槽檔板
2	I/O 面板
3	AC 輸入電源接頭

2.2.1 I/O 面板

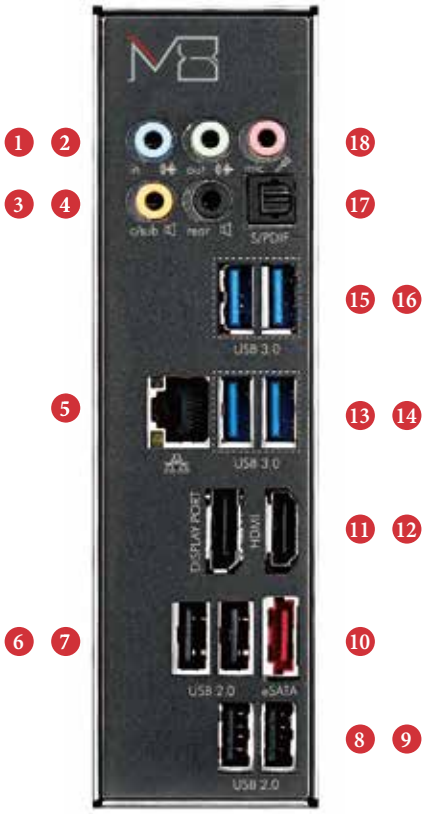
1
2
18
3
4
17
S/PDIF
15
16
USB 3.0
5
13
14
USB 3.0
11
12
DISPLAY PORT
HDMI
6
7
10
USB 2.0
eSATA
8
9
USB 2.0

編號	說明	編號	說明
1	線路輸入連接埠 (淡藍色)	10	eSATA2 連接埠 **
2	線路輸出連接埠 (萊姆色)	11	DisplayPort
3	中央 / 重低音連接埠 (橘色)	12	HDMI 連接埠
4	後喇叭輸出連接埠 (黑色)	13	USB3.0 連接埠
5	LAN RJ-45 連接埠 * (Intel Gigabit LAN)	14	USB3.0 連接埠
6	USB2.0 連接埠	15	USB3.0 連接埠
7	USB2.0 連接埠	16	USB3.0 連接埠
8	USB2.0 連接埠	17	光纖 SPDIF 輸出連接埠
9	USB2.0 連接埠	18	麥克風連接埠 (粉紅色)

** LAN 連接埠上設有兩顆 LED。如需 LAN 連接埠 LED 指示，請參閱下表。*

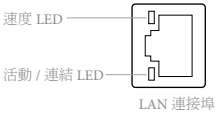

活動 / 連結 LED		速度 LED	
狀態	說明	狀態	說明
關	無連結	關	10Mbps 連線
閃爍	資料活動	橘色	100Mbps 連線
開	連結	綠色	1Gbps 連線

*** eSATA 接頭與 SATA3_4 接頭共用。*

2.3 內視圖

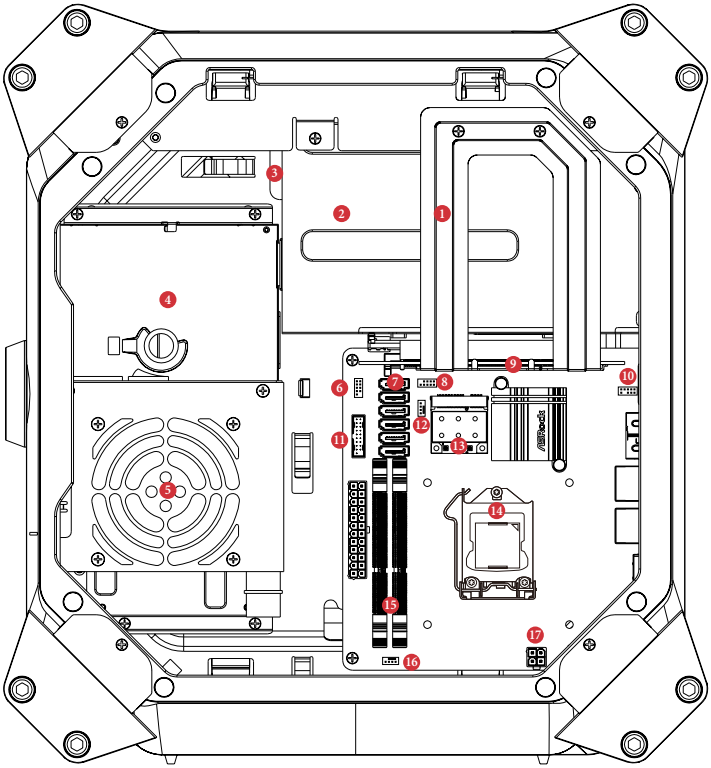

編號	說明
1	擴充卡固定架
2	VGA 卡架
3	硬碟托盤 (相容於 4 x 2.5 吋 HDD 或 1 x 3.5 吋 HDD)
4	ODD + 2.5 吋 HDD 托盤
	(相容於 1 x 吸入式 ODD 與 1 x 2.5 吋 HDD)
5	電源供應器單元 (450W)
6	電源面板排針
7	SATA 3.0 接頭
8	USB 2.0 排針
9	PCIe 插槽

10	前置音訊接頭
11	USB 3.0 排針
12	輔助風扇接頭
13	2T2R WiFi 模組 (802.11ac)
14	CPU 插座
15	DIMM 插座
16	機殼風扇接頭
17	ATX 12V 電源接頭

本系統不含硬碟。

1 简介

感谢您购买 M8，这是按照 ASRock 一贯严格质量控制标准生产的性能可靠的游戏准系统。它提供符合 ASRock 质量和耐久性承诺的精良设计和卓越性能。

由于硬件规格可能已更新，因此，本文档的内容可能会随时更改，恕不另行通知。如果本文档有任何修改，则更新的版本将发布在 ASRock 网站上，我们不会另外进行通知。如果您需要与此产品相关的技术支持，请访问我们的网站以具体了解所用型号的信息。 ASRock 网站： http://www.asrock.com.

1.1 包装清单

- M8 准系统包括 :
  M8 机箱
  Mini-ITX 主板（预安装）
  电源装置（预安装）
  系统风扇（预安装）
- 交流电源线
- 六角螺丝刀
- 螺丝刀套件
- 螺丝包
- 机箱锁定键
- 显卡支架
- 6 x SATA 线
- 支持光盘
- 快速安装指南
- 用户手册

如果有任何项目缺失或好像损坏，请联系授权经销商。

1.2 产品规格

颜色	• 风暴黑
材料	• 钢机身 / 铝 + 塑料
尺寸	• 372mm (宽) x 123mm (高) x 400mm (长)
主板	• ASRock Z87-M8
CPU	• 支持 4 代 Intel® Core™ i7 / i5 / i3 / Xeon® / Pentium® / Celeron® 处理器系列
内存	• 支持 DDR3 1600/1333/1066 MHz、2 x SO-DIMM 插槽，最高 16GB
VGA	• 支持 1 x 双槽图形卡
光驱	• 1 x 簿型吸入式超级多功能光驱
硬盘	• 支持 3.5"HDD 和 2.5"HDD
WiFi + BT	• 2T2R WiFi 802.11ac + BT v4.0
前面 I/O	• 4 x USB 3.0, 1 x MIC, 1 x 耳机 • 4 合 1 读卡器 (SD3.0/MMC/MS/MS PRO)
后面 I/O	• 1 x 7.1HD 音频，Creative Sound Core3D， • 1 x Intel Gigabit LAN, 4 x USB3.0, 4 x USB2.0, • 1 x eSATA2, 1 x DP, 1 x HDMI
多合一 OLED 按钮	• A-Command
散热	• 上部 : 2 x 70mm 风扇，下部 : 2 x 70mm 风扇
电源	• SFX PSU 450W

2 产品概览

本章通过图示介绍 M8 重要组件的位置。

2.1 前视图

编号	说明
1	A-Command（多合一 OLED 按钮）
2	光驱弹出按钮
3	4 x USB 3.0 端口
4	4 合 1 读卡器 (SD3.0/MMC/MS/MS PRO)
5	麦克风插孔
6	耳机插孔

2.1.1 A-Command 功能

A-Command 是一个多功能控制旋钮，可用于循环选择不同的功能。

控制 A-Command

- 旋转旋钮可在主要功能或选项之间切换。
- 再按一下确认您的选择。

打开系统电源

按 A-Command 打开系统电源。等到操作系统自动载入。

关闭系统电源

在 OLED 显示 M8 标志 / 日期和时间时，按 A-Command 并选择“是”关闭系统电源。

进入 Windows 前

进入操作系统前有三个主要功能。

- **M8 Logo / Date and Time（M8 标志 / 日期和时间）：**
  标志显示 10 秒后，屏幕显示日期和时间。
  如果闲置 5 分钟，显示屏幕会消失。
- **Light（指示灯）：**
  打开 / 关闭机壳上指示灯。
- **Time（时间）：**
  打开 / 关闭时间。
  如果此选项被设置为开，M8 标志 / 日期和时间屏幕可用。如果此选项被设置为关，M8 标志 / 日期和时间屏幕被隐藏。

简体中文

Windows 下：

进入操作系统后有六个主要功能。

- **M8 Logo / Date and Time（M8 标志 / 日期和时间）：**
  标志显示 10 秒后，屏幕显示日期和时间。
  如果闲置 5 分钟，显示屏幕会消失。

- **Volume（音量）：**
  通过左右转动旋钮增加 / 减小音量。

- **Mode（模式）：**
  在三个电源管理模式 Eco（节能）、Standard（标准）或 Speed（速度）之间切换。

- **Info（信息）：**
  在不同类型的重要信息之间切换以检查系统的状态。OLED 屏幕显示 CPU 频率、CPU 使用、LAN 使用或 APM* 数据。
  *APM（每分钟操作数）测量您在一分钟内可以执行的键盘 / 鼠标点击操作数。要了解您手指的移动速度，按一下 A-Command 开始 APM 计数。再按一下 A-Command 可停止它。

- **Light（指示灯）：**
  打开 / 关闭机壳上指示灯，或启用晚安指示灯功能 *。
  On（开）：打开机壳上指示灯
  Off（关闭）：关闭机壳上指示灯
  All off（全关）：关闭机壳上指示灯；启用晚安 LED 功能
  *ASRock 晚安指示灯技术通过使多余的指示灯熄灭，让您有一个更好的睡眠环境。通过启用晚安指示灯，在系统打开时，电源 / 硬盘 LED 指示灯将关闭。当系统进入待机 / 休眠模式时，晚安指示灯也会自动关闭电源。

- **Time（时间）：**
  打开 / 关闭时间。
  如果此选项被设置为开，M8 标志 / 日期和时间屏幕可用。如果此选项被设置为关，M8 标志 / 日期和时间屏幕被隐藏。

2.2 后视图

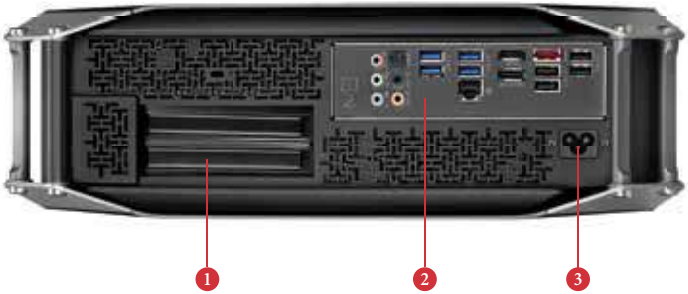

编号	说明
1	PCIe 槽盖
2	I/O 面板
3	交流输入电源接口

简体中文

2.2.1 I/O 面板

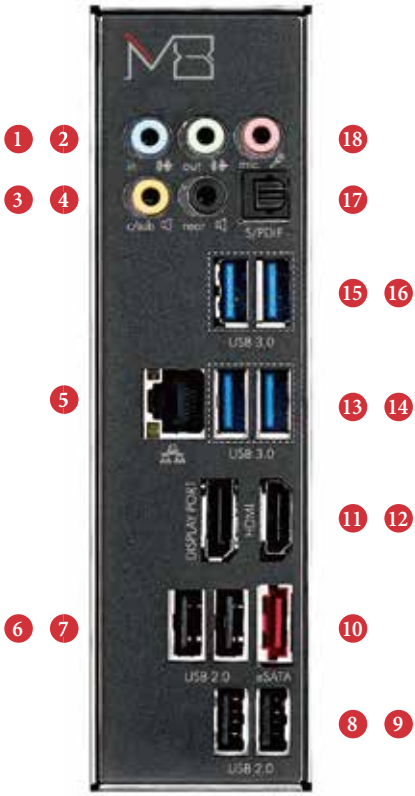

简体中文

编号	说明	编号	说明
1	线路输入端口（淡蓝色）	10	eSATA2 端口 **
2	线路输出端口（浅绿色）	11	DisplayPort
3	中央 / 低音扬声器端口（橙色）	12	HDMI 端口
4	后面扬声器输出端口（黑色）	13	USB3.0 端口
5	LAN RJ-45 端口 * (Intel Gigabit LAN)	14	USB3.0 端口
6	USB2.0 端口	15	USB3.0 端口
7	USB2.0 端口	16	USB3.0 端口
8	USB2.0 端口	17	光学 SPDIF 输出端口
9	USB2.0 端口	18	麦克风端口（粉红色）

** LAN 端口上有两个指示灯。请参考下表了解 LAN 端口指示灯。*

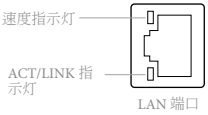

活动 /连接指示灯		速度指示灯	
状态	说明	状态	说明
不亮	没连接	不亮	10Mbps 连接
闪烁	数据活动	橙色	100Mbps 连接
亮起	连接	绿色	1Gbps 连接

*** eSATA 接口与 SATA3_4 接口共享。*

简体中文

2.3 内视图

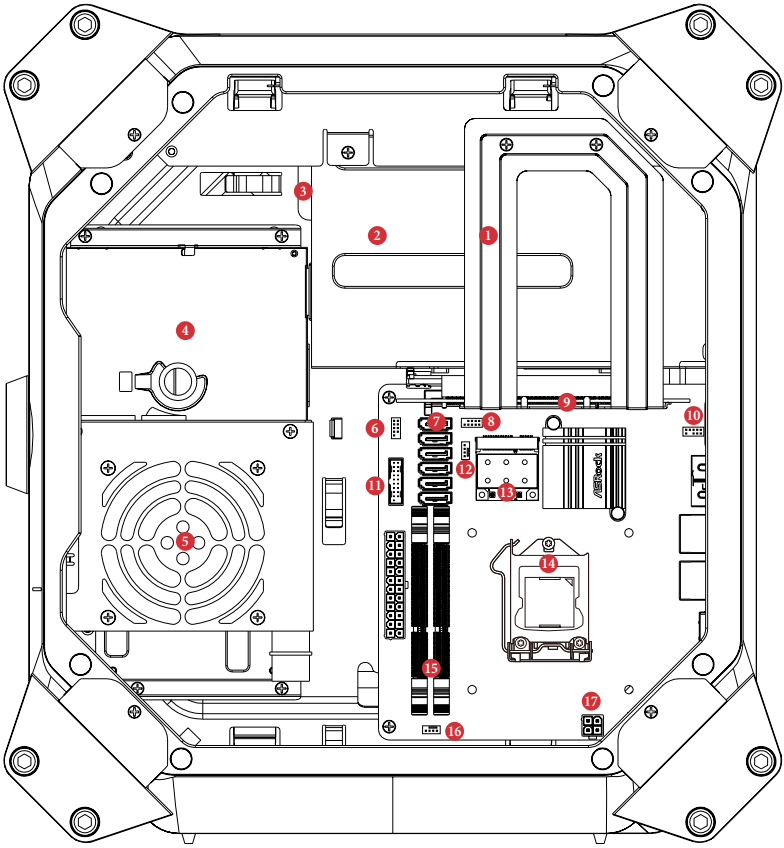

编号	说明
1	转接卡固定支架
2	VGA 卡固定器
3	硬盘托盘（兼容 4 x 2.5" HDD 或 1 x 3.5 HDD）
4	ODD + 2.5" HDD 托盘
	（兼容 1 x 吸入式 ODD 和 1 x 2.5" HDD）
5	电源装置 (450W)
6	系统面板接脚
7	SATA 3.0 接口
8	USB 2.0 接脚
9	PCIe 槽
10	前面音频接口

11	USB 3.0 接脚
12	辅助风扇接口
13	2T2R WiFi 模块 (802.11ac)
14	CPU 插槽
15	DIMM 插槽
16	机箱风扇接口
17	ATX 12V 电源接口

此系统中未包括硬盘。

简体中文

1 Einleitung

Vielen Dank, dass Sie sich für das M8 entschieden haben – ein zuverlässiges Gaming-Barebone-System, das konsequent unter der strengen Qualitätskontrolle von ASRock hergestellt wurde. Es liefert ausgezeichnete Leistung mit robustem Design, das ASRocks Streben nach Qualität und Beständigkeit erfüllt.

Da die technischen Daten der Hardware aktualisiert werden können, kann der Inhalt dieser Dokumentation ohne Ankündigung geändert werden. Falls diese Dokumentation irgendwelchen Änderungen unterliegt, wird die aktualisierte Version ohne weitere Hinweise auf der AS-Rock-Webseite zur Verfügung gestellt. Sollten Sie technische Hilfe in Bezug auf dieses Produkt benötigen, erhalten Sie auf unserer Webseite spezifischen Informationen über das von Ihnen verwendete Modell. ASRock-Internetseite: http://www.asrock.com.

1.1 Lieferumfang

- M8-Barebone-System mit:
  M8-Gehäuse
  Mini-ITX-Motherboard (vorinstalliert)
  Netzteil (vorinstalliert)
  Systemlüfter (vorinstalliert)
- AC-Netzkabel
- Sechskantschraubendreher
- Schraubendreherset
- Schraubenpaket
- Schlüssel für Gehäuseschloss
- VGA Support
- 6 x SATA-Kabel
- Support-CD
- Schnellinstallationsanleitung
- Bedienungsanleitung

Falls etwas fehlen oder beschädigt sein sollte, wenden Sie sich an Ihren autorisierten Händler.

1.2 Produktspezifikationen

Farbe	• Storm Black
Material	• Stahlgehäuse / Aluminium + Kunststoff
Abmessungen	• 372 mm (B) x 123 mm (H) x 400 mm (L)
Motherboard	• ASRock Z87-M8
Prozessor	• Unterstützt Intel® Core™-Prozessorfamilie i7 / i5 / i3 / Xeon® / Pentium® / Celeron® der 4. Generation
Speicher	• Unterstützt DDR3 1600/1333/1066 MHz, 2 x SO-DIMM-Steckplätze, max. 16 GB
VGA	• Unterstützt 1 x Dual-Steckplatz-Grafikkarte
Optisches Laufwerk	• 1 x schlankes Slot-In-Laufwerk, Super Multi
Festplatte	• Unterstützt 3,5- und 2,5-Zoll-Festplatten
WLAN + BT	• 2T2R WLAN 802.11ac + BT v4.0
I/O vorne	• 4 x USB 3.0, 1 x Mikrofon, 1 x Kopfhörer • 4-in-1-Kartenleser (SD 3.0/MMC/MS/MS PRO)
I/O hinten	• 1 x hochauflösendes 7.1-Audio mit Creative Sound Core3D, • 1 x Intel-Gigabit-LAN, 4 x USB 3.0, 4 x USB 2.0, • 1 x eSATA 2, 1 x DP, 1 x HDMI
Alles-in-Einem-OLED-Taste	• A-Command
Kühlung	• Oberseite: 2 x 70-mm-Lüfter, Unterseite: 2 x 70-mm-Lüfter
Stromversorgung	• SFX-Netzteil, 450 W

2 Produktübersicht

Dieses Kapitel enthält Abbildungen mit den Positionen wichtiger Komponenten des M8.

2.1 Vorderseite

Nr.	Beschreibung
1	A-Command (Alles-in-Einem-OLED-Taste)
2	Auswurftaste des optischen LaufwerksA-Command
3	4 x USB 3.0-Ports
4	4-in-1-Kartenleser (SD 3.0/MMC/MS/MS PRO)
5	Mikrofonanschluss
6	Kopfhöreranschluss

2.1.1 Die Funktion von A-Command

Der A-Command ist ein Mehrzweckkontrollregler zum Umschalten zwischen verschiedenen Funktionen.

A-Command steuern

- Drehen Sie den Knopf zum Umschalten zwischen Hauptfunktionen und Optionen.
- Drücken Sie zum Bestätigen Ihrer Auswahl einmal.

System einschalten

Drücken Sie zum Einschalten des Systems A-Command. Warten Sie, bis das Betriebssystem automatisch lädt.

System abschalten

Wenn das OLED das M8-Logo / Datum und Zeit anzeigt, drücken Sie A-Command und wählen zum Abschalten des Systems „Yes“ (Ja).

Vor Aufrufen von Windows

Es gibt vor Aufrufen des Betriebssystems drei Hauptfunktionen.

- **M8-Logo / Datum und Uhrzeit:**
  Nachdem das Logo zehn Sekunden angezeigt wird, erscheinen Datum und Uhrzeit im Bildschirm.
  Das Display erlischt nach fünfminütiger Inaktivität.
- **Licht:**
  Licht im Gehäuse ein-/ausschalten.
- **Zeit:**
  Zeit ein-/ausschalten.
  Falls diese Option eingeschaltet ist, sind die Bildschirme M8-Logo / Datum und Uhrzeit verfügbar. Falls diese Option ausgeschaltet ist, sind die Bildschirme M8-Logo / Datum und Uhrzeit ausgeblendet.

Unter Windows:

Es gibt nach Aufrufen des Betriebssystems sechs Hauptfunktionen.

- **M8-Logo / Datum und Uhrzeit:**
  Nachdem das Logo zehn Sekunden angezeigt wird, erscheinen Datum und Uhrzeit im Bildschirm.
  Das Display erlischt nach fünfminütiger Inaktivität.

- **Lautstärke:**
  Lautstärke durch Drehen des Knopfs nach rechts/links erhöhen/verringern.

- **Modus:**
  Zwischen drei Energieverwaltungsmodi umschalten – Energiesparen, Standard und Geschwindigkeit.

- **Info:**
  Zwischen verschiedenen Arten kritischer Informationen zur Prüfung des Systemstatus umschalten. Der OLED-Bildschirm zeigt CPU-Frequenz, CPU-Auslastung, LAN-Auslastung oder APM*-Daten.
  *APM (Aktionen pro Minute) misst die Anzahl Tastenanschläge/Mausklicks, die Sie in einer Minute ausführen können. Finden Sie heraus, wie schnell sich Ihre Finger bewegen können, indem Sie A-Command zum zählen der APM einmal drücken. Drücken Sie A-Command zum Beenden noch einmal.

- **Licht:**
  Licht im Gehäuse ein/ausschalten oder Good Night LED-Funktion* aktivieren.
  Ein: Licht im Gehäuse einschalten
  Aus: Licht im Gehäuse ausschalten
  Alles aus: Licht im Gehäuse ausschalten; Good Night LED-Funktion aktivieren
  *ASRock Good Night LED-Technologie bietet Ihnen eine bessere Schlafumgebung durch Abschaltung nicht benötigter LEDs. Durch Aktivierung von Good Night LED werden Betriebsanzeige/Festplatten-LEDs abgeschaltet, wenn das System eingeschaltet ist. Good Night LED schaltet Betriebsanzeige- und Tastatur-LEDs automatisch ab, wenn das System außerdem den Bereitschafts-/Tiefschlafmodus aufruft.

- **Zeit:**
  Zeit ein-/ausschalten.
  Falls diese Option eingeschaltet ist, sind die Bildschirme M8-Logo / Datum und Uhrzeit verfügbar. Falls diese Option ausgeschaltet ist, sind die Bildschirme M8-Logo / Datum und Uhrzeit ausgeblendet.

2.2 Rückseite

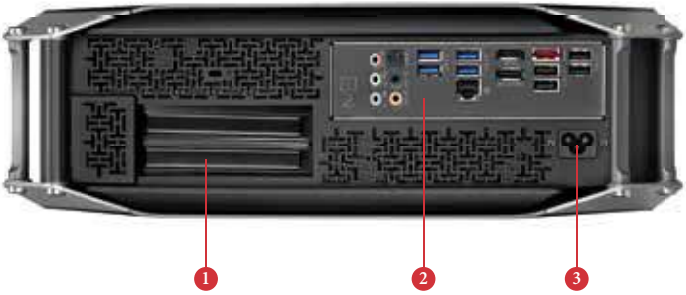

Nr.	Beschreibung
1	PCIe-Steckplatzabdeckungen
2	I/O-Blende
3	Netzeingang

2.2.1 I/O-Blende

Nr.	Beschreibung	Nr.	Beschreibung
1	Line-In-Port (hellblau)	10	eSATA2-Port**
2	Line-Out-Port (grün)	11	DisplayPort
3	Center/Subwoofer-Port (orange)	12	HDMI-Port
4	Rückseitiger Lautsprecherausgang (schwarz)	13	USB 3.0-Port
5	LAN-RJ-45-Port* (Intel-Gigabit-LAN)	14	USB 3.0-Port
6	USB 2.0-Ports	15	USB 3.0-Port
7	USB 2.0-Ports	16	USB 3.0-Port
8	USB 2.0-Ports	17	Optischer SPDIF-Ausgang
9	USB 2.0-Ports	18	Mikrofonanschluss (rosa)

** Es gibt zwei LEDs am LAN-Port. Bitte beachten Sie die nachstehende Tabelle zur Identifikation der LAN-Port-LED.*

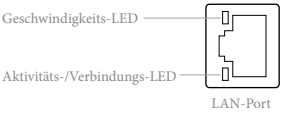

Aktivitäts- / Verbindungs-LED		Geschwindigkeits-LED	
Status	**Beschreibung**	**Status**	**Beschreibung**
Aus	Keine Verbindung	Aus	10-Mb/s-Verbindung
Blinkt	Datenaktivität	Orange	100-Mb/s-Verbindung
Ein	Verbindung	Grün	1-Gb/s-Verbindung

*** Der eSATA-Anschluss wird mit dem SATA3_4-Anschluss geteilt.*

2.3 Innenseite

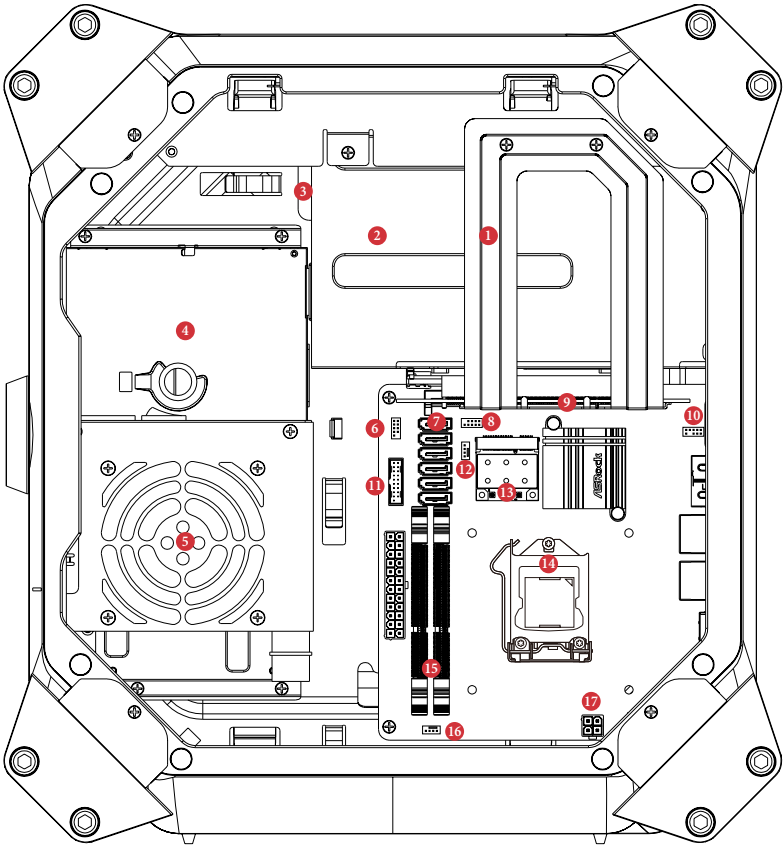

Nr.	Beschreibung
1	Riser-Kartenhalterung
2	VGA-Kartenhalterung
3	Festplatteneinschub (kompatibel mit vier 2,5-Zoll-Festplatten oder 1 x 3,5-Zoll-Festplatte)
4	ODD- + 2,5-Zoll-Festplatteneinschub
	(kompatibel mit einem optischem Slot-In-Laufwerk und einer 2,5-Zoll-Festplatte)
5	Netzteil (450 W)
6	Systemblende-Stileiste
7	SATA 3.0-Anschlüsse
8	USB 2.0-Stileisten
9	PCIe-Steckplatz

10	Vorderer Audioanschluss
11	USB 3.0-Stileisten
12	Zusatzlüfteranschluss
13	2T2R-WLAN-Modul (802.11ac)
14	CPU-Sockel
15	DIMM-Steckplätze
16	Gehäuselüfteranschluss
17	ATX-12-V-Netzanschluss

Festplatten sind nicht im Lieferumfang dieses Systems enthalten.

1 Introduction

Nous vous remercions d'avoir acheté le M8, un mini-châssis fabriqué conformément au contrôle de qualité rigoureux et constant appliqué par ASRock. Fidèle à son engagement de qualité et de durabilité, ASRock vous garantit une carte mère de conception robuste aux performances élevées.

Les spécifications matérielles pouvant être mises à jour, le contenu de ce document est soumis à modification sans préavis. En cas de modifications du présent document, la version mise à jour sera disponible sur le site Internet ASRock sans notification préalable. Si vous avez besoin d'une assistance technique pour ce châssis, veuillez visiter notre site Internet pour plus de détails sur le modèle que vous utilisez. Site Internet ASRock : http://www.asrock.com.

1.1 Contenu de l'emballage

- Système mini-boîtier M8 comprenant :
  Châssis M8
  Carte mère Mini-ITX (préinstallé)
  Bloc d'alimentation (préinstallée)
  Système de ventilation (préinstallé)
- Cordon d'alimentation CA
- Tournevis hexagonal
- Ensemble de tournevis
- ensemble de vis
- Clé pour verrouillage du châssis
- VGA support
- 6 x câble SATA
- CD inclus
- Guide d'installation rapide
- Manuel d'utilisation

Si un quelconque élément semblait manquant ou endommagé, veuillez immédiatement contacter votre revendeur agréé.

1.2 Spécifications du produit

Coloris	• Noir orage
Matériaux	• Corps en acier / aluminium + plastique
Dimensions	• 372mm (L) x 123mm (H) x 400mm (l)
Carte mère	• ASRock Z87-M8
Processeur	• Prend en charge les processeurs 4ème Génération Intel® Core™ i7 / i5 / i3 / Xeon® / Pentium® / Celeron®
Mémoire	• Prend en charge DDR3 1600/1333/1066 MHz, 2 x fentes SO-DIMM, jusqu'à 16Go max.
VGA	• Prend en charge 1 x carte graphique double fente
Lecteur optique	• 1 x Super-Multi Drive slim slot-in
Disque dur	• Prend en charge les HDD 3,5" et les HDD 2,5"
WiFi + BT	• 2T2R WiFi 802.11ac + BT v4.0
Connectique E/S avant	• 4 x USB 3.0, 1 x MIC, 1 x casque • Lecteur de cartes 4 en 1 (SD3.0/MMC/MS/MS PRO)
Connectique E/S arrière	• 1 x audio HD 7.1 avec Creative Sound Core3D, • 1 x Intel Gigabit LAN, 4 x USB3.0, 4 x USB2.0, • 1 x eSATA2, 1 x DP, 1 x HDMI
Bouton OLED tout-en-un	• A-Command
Refroidissement	• Haut : 2 x ventilateur 70mm, Bas : 2 x ventilateur 70mm
Bloc d'alimentation	• Bloc SFX 450W

2 Vue d'ensemble du matériel

Ce chapitre comprend des diagrammes illustrant l'emplacement de composants critiques de votre châssis M8.

2.1 Vue avant

No.	Description
1	A-Command (bouton OLED tout-en-un)
2	Bouton d'éjection du lecteur optique
3	4 x ports USB 3.0
4	Lecteur de cartes 4 en 1 (SD3.0/MMC/MS/MS PRO)
5	Prise microphone
6	Prise casque

2.1.1 Fonction de la A-command

La A-command est un bouton multifonction qui permet de sélectionner diverses fonctionnalités.

Contrôle de la A-command

- Faites tourner le bouton pour sélectionner une fonction principale ou une option.
- Appuyez une fois pour confirmer votre choix.

Mise en route du système

Appuyez sur la A-command pour allumer le système. Attendez que le système d'exploitation se charge automatiquement

Arrêt du système

Lorsque le bouton OLED affiche le logo M8 / date et heure, appuyez sur la A-command et sélectionnez "Yes" (oui) pour éteindre le système.

Avant d'accéder à Windows

Trois fonctions principales apparaissent avant d'accéder au système d'exploitation.

- **Logo M8 / date et heure :**
  Le logo s'affiche pendant dix secondes, puis la date et l'heure apparaissent sur l'écran.
  L'écran s'éteint automatiquement en l'absence d'activité pendant cinq minutes.
- **Eclairage :**
  Active/désactive l'éclairage du châssis
- **Heure :**
  Active/désactive l'affichage de l'heure
  Lorsque cette option est activée, le logo M8 et les écrans date et heure sont disponibles. Lorsque cette option est désactivée, le logo M8 et les écrans date et heure sont masqués.

Sous Windows :

Six fonctions principales apparaissent sous le système d'exploitation.

- **Logo M8 / date et heure :**
  Le logo s'affiche pendant dix secondes, puis la date et l'heure apparaissent sur l'écran.
  L'écran s'éteint automatiquement en l'absence d'activité pendant cinq minutes.

- **Volume :**
  Augmentez/diminuez le volume en tournant le bouton principal vers la gauche/droite.

- **Mode :**
  Trois modes de gestion de l'alimentation sont disponibles - Eco, Standard et Speed.

- **Infos :**
  Permet de consulter les informations critiques pour vérifier l'état du système.
  L'écran OLED affiche la fréquence du processeur, l'utilisation du processeur, l'utilisation du LAN et les données APM*.
  *APM (actions par minute) mesure le nombre de frappes/clic de souris effectués en une minute Pour connaître votre vitesse de frappe, appuyez une fois sur la A-command pour démarrer la mesure APM. Appuyez une nouvelle fois sur la A-command pour arrêter la mesure.

- **Eclairage :**
  Activez/désactivez l'éclairage du châssis ou activez la fonction Good Night LED*.
  Marche : allume l'éclairage du châssis
  Arrêt : éteint l'éclairage du châssis
  Arrêt total : éteint l'éclairage du châssis ; active la fonction Good Night LED
  *La technologie Good Night LED d'ASRock crée un cadre de sommeil apaisant en éteignant tous les voyants LED non essentiels. En activant la fonction Good Night LED, les LED d'alimentation/disque dur resteront éteints lorsque le système est allumé. Good Night LED désactive automatiquement les voyants d'alimentation et du clavier lorsque le système passe en mode Veille/hibernation.

- **Heure :**
  Active/désactive l'affichage de l'heure.
  Lorsque cette option est activée, le logo M8 et les écrans date et heure sont disponibles. Lorsque cette option est désactivée, le logo M8 et les écrans date et heure sont masqués.

2.2 Vue arrière

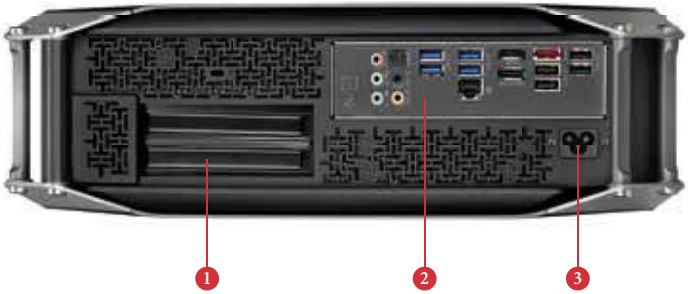

No.	Description
1	Caches pour fentes PCIe
2	Panneau E/S
3	Connecteur entrée d'alimentation CA

2.2.1 Panneau E/S

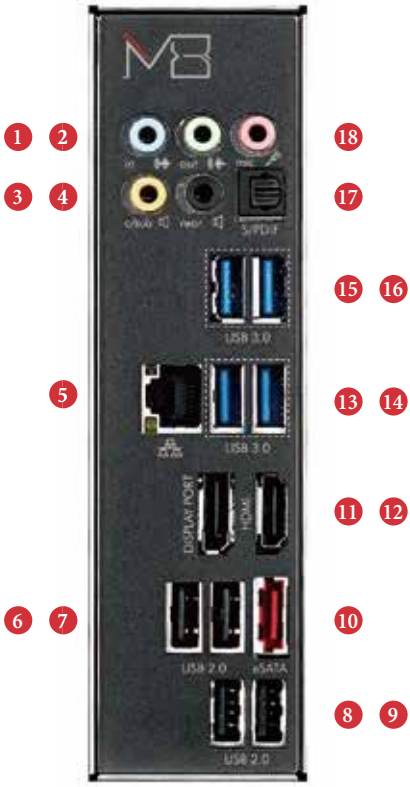

Français

No.	Description	No.	Description
1	Port entrée ligne (témoin bleu)	10	Port eSATA2**
2	Port sortie ligne (citron vert)	11	DisplayPort
3	Port Centre/Caisson de basse (orange)	12	Port HDMI
4	Port sortie haut-parleur arrière (noir)	13	Port USB3.0
5	Port LAN RJ-45* (Intel Gigabit LAN)	14	Port USB3.0
6	Ports USB2.0	15	Port USB3.0
7	Ports USB2.0	16	Port USB3.0
8	Ports USB2.0	17	Port sortie optique SPDIF
9	Ports USB2.0	18	Port microphone (rose)

** Le port LAN possède deux voyants LED. Veuillez consulter le tableau ci-dessous pour plus de renseignements sur les voyants LED du port LAN.*

Port LAN

LED activité / lien		LED vitesse	
Etat	Description	Etat	Description
Eteint	Aucun lien	Eteint	Connexion 10Mbps
Clignotant	Activité données	Orange	Connexion 100Mbps
Allumé	Lien	Vert	Connexion 1Gbps

*** Le connecteur eSATA est partagé avec le connecteur SATA3_4.*

2.3 Vue interne

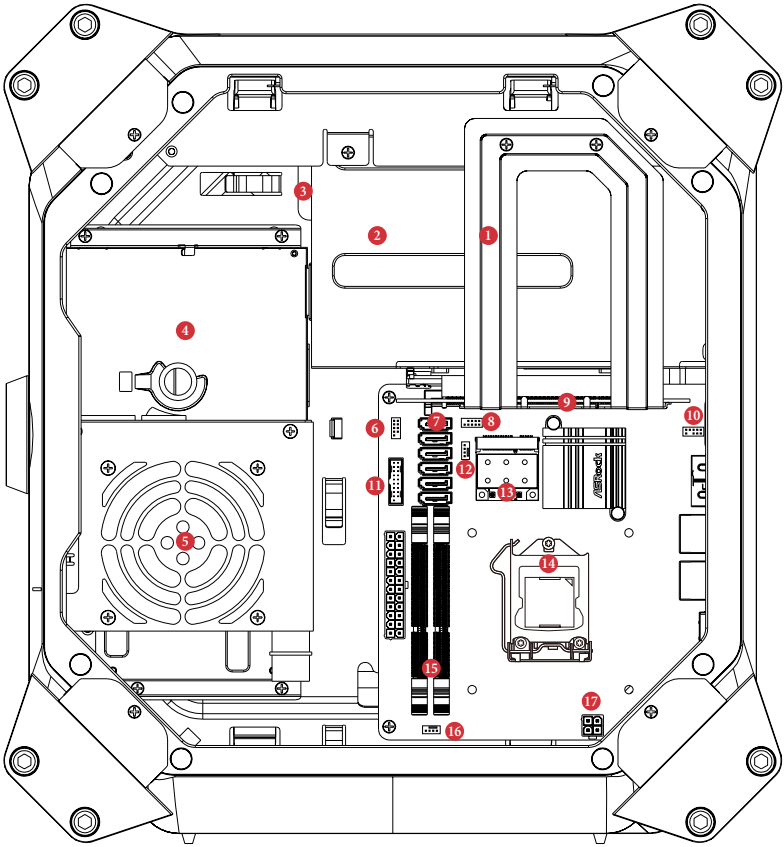

No.	Description
1	Support de maintien du rehausseur de carte
2	Porte-carte VGA
3	Plateau pour lecteur de disque dur (compatible avec 4 x HDD 2,5" ou 1 x HDD 3,5)
4	Plateau ODD + HDD 2,5"
	(compatible avec 1 x ODD slot-in et 1 x HDD 2,5")
5	Bloc d'alimentation (450W)
6	Embase du panneau système
7	Connecteurs SATA 3.0
8	Embases USB 2.0
9	Fente PCIe
10	Connecteur audio panneau avant

11	Embases USB 3.0
12	Connecteurs du ventilateur auxiliaire
13	Module WiFi 2T2R (802.11ac)
14	Socket processeur
15	Sockets DIMM
16	Connecteurs du ventilateur du châssis
17	Connecteur d'alimentation ATX 12V

Les disques durs ne sont pas livrés avec ce système.

1 Introduzione

Congratulazioni per l'acquisto di M8, un sistema barebone di gioco affidabile prodotto secondo i severissimi controlli di qualità ASRock. La scheda madre offre eccellenti prestazioni con un design robusto che si adatta all'impegno di ASRock di offrire sempre qualità e durata.

Poiché le specifiche hardware possono essere aggiornati, i contenuti di questa documentazione sono soggetti a modifiche senza preavviso. Nel caso di eventuali modifiche della presente documentazione, la versione aggiornata sarà disponibile sul sito Web di ASRock senza ulteriore preavviso. Se si necessita dell'assistenza tecnica per questo prodotto, visitare il nostro sito per informazioni specifiche sul modello che si sta usando. Sito ASRock: http://www.asrock.com.

1.1 Contenuto della confezione

- Sistema Barebone M8 con:
  Telaio M8
  Scheda madre Mini-ITX (preinstallata)
  Alimentatore (preinstallato)
  Ventola di sistema (preinstallata)
- Cavo d'alimentazione AC
- Cacciavite esagonale
- Set di cacciaviti
- Confezione delle viti
- Chiave telaio
- VGA Support
- 6 cavi SATA
- CD di supporto
- Guida all'installazione rapida
- Manuale d'uso

Se qualsiasi elemento manca o è danneggiato, mettersi in contatto con il rivenditore autorizzato.

1.2 Specifiche del prodotto

Color	• Nero tempesta
Materiale	• Corpo si acciaio / alluminio + plastica
Dimensioni	• 372 mm (P) x 123 mm (H) x 400 mm (L)
Scheda madre	• ASRock Z87-M8
CPU	• Supporto della famiglia di processori 4th Gen Intel® Core™ i7 / i5 / i3 / Xeon® / Pentium® / Celeron®
Memoria	• Supporto di DDR3 1600/1333/1066 MHz, 2 alloggi SO-DIMM, al massimo fino a 16GB
VGA	• Supporto di 1 scheda video dual-slot
Unità ottica	• 1 unità slim slot-in Super-Multi
Disco rigido	• Supporto di HDD 3,5" e HDD 2,5"
WiFi + BT	• 2T2R WiFi 802.11ac + BT v4.0
Pannello i/O frontale	• 4 x USB 3.0, 1 x microfono, 1 x cuffie • Lettore di schede 4 in 1 (SD3.0/MMC/MS/MS PRO)
Pannello I/O posteriore	• 1 x audio 7.1HD con Creative Sound Core3D, • 1 x LAN Intel Gigabit, 4 x USB3.0, 4 x USB2.0, • 1 x eSATA2, 1 x DP, 1 x HDMI
Tasto OLED All-In-One	• A-Command
Raffredda-mento	• Pannello superiore: 2 x ventole 70 mm, Pannello inferiore: 2 x ventole 70 mm
Alimentazione	• SFX PSU 450W

2 Descrizione del prodotto

Questo capitolo fornisce diagrammi che mostrano la posizione dei componenti chiave di M8.

2.1 Veduta frontale

No.	Descrizione
1	A-Command (Tasto OLED All-In-One)
2	Tasto d'espulsione unità ottica
3	4 x porte USB 3.0
4	Lettore di schede 4 in 1 (SD3.0/MMC/MS/MS PRO)
5	Connettore microfono
6	Connettore cuffie

2.1.1 Funzione della manopola A-Command

A-Command è una manopola di regolazione polivalente utilizzata per scorrere tra varie funzioni.

Controllo della manopola A-Command

- Ruotare la manopola per passare tra le principali funzioni od opzioni.
- Premere una volta per confermare la selezione.

Accensione del sistema

Premere la manopola A-Command per accendere il sistema. Attendere che il sistema operativo si carichi automaticamente.

Spegnimento del sistema

Quando il display OLED mostra il logo M8 / Data e Ora, premere la manopola A-Command e selezionare "Yes" (Sì) per spegnere il sistema.

Prima di accedere a Windows

Ci sono tre funzioni principali prima di accedere al sistema operativo.

- **Logo M8 / Data e ora:**
  Dopo avere visualizzato il logo per dieci secondi, lo schermo mostra la data e l'ora.
  Il display si spegne se è lasciato inattivo per cinque minuti.
- **Light (Luce):**
  Permette di attivare/disattivare la luce del case.
- **Time (Ora):**
  Permette di attivare/disattivare l'ora.
  Se questa opzione è impostata su On (Attiva), il logo M8 / Data e ora sono visibili. Se questa opzione è impostata su Off (Disattiva), il logo M8 / Data e ora sono nascosti.

Windows:

Ci sono sei funzioni principali prima di accedere al sistema operativo.

- **Logo M8 / Data e ora:**
  Dopo avere visualizzato il logo per dieci secondi, lo schermo mostra la data e l'ora.
  Il display si spegne se è lasciato inattivo per cinque minuti.

- **Volume:**
  Permette di aumentare/diminuire il livello del volume girando la manopola verso destra/sinistra.

- **Mode (Modalità):**
  Permette di passare fra tre modalità di risparmio energetico – Eco, Standard o Speed (Velocità).

- **Info:**
  Permette di passare tra vari tipi di informazioni critiche per controllare lo stato del sistema. Il display OLED mostra la frequenza della CPU, l'utilizzo della CPU, l'utilizzo della LAN o i dati APM*.
  *APM (Actions Per Minute) misura il numero di azioni tastiera/mouse eseguite in un minuto. Per scoprire quanto velocemente possono muoversi le dita, premere una volta la manopola A-Command per avviare il conteggio APM. Premere di nuovo la manopola A-Command per arrestare il conteggio.

- **Light (Luce):**
  Attivare/disattivare la luce del case, oppure abilitare la funzione Good Night LED*.
  On (Attiva): Attiva la luce del case
  Off (Disattiva): Disattiva la luce del case
  All off (Disattiva tutto): Disattiva la luce del case; abilita la funzione Good Night LED.
  *La tecnologia ASRock Good Night LED offre un migliore ambiente per dormire spegnendo i LED non essenziali. Abilitando Good Night LED, i LED alimentazione/HDD si spengono quando il sistema è acceso. La funzione Good Night LED spegne automaticamente i LED alimentazione e della tastiera quando il sistema accede alla modalità di standby/ibernazione.

- **Time (Ora):**
  Permette di attivare/disattivare l'ora.
  Se questa opzione è impostata su On (Attiva), il logo M8 / Data e ora sono visibili. Se questa opzione è impostata su Off (Disattiva), il logo M8 / Data e ora sono nascosti.

2.2. Veduta posteriore

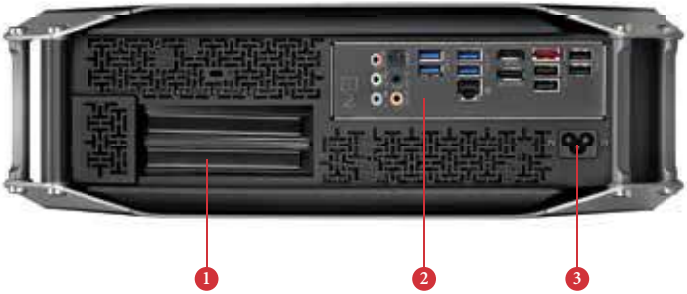

No.	Descrizione
1	Coperchi alloggi PCIe
2	Panello I/O
3	Connettore ingresso alimentazione AC

2.2.1 Panello I/O

No.	Descrizione	No.	Descrizione
1	Porta ingresso linea (azzurro)	10	Porta eSATA2*
2	Porta uscita linea (verde lime)	11	DisplayPort
3	Porta diffusore centrale/subwoofer (arancione)	12	Porta HDMI
4	Porta uscita diffusori posteriori (nero)	13	Porta USB3.0
5	Porta LAN RJ-45* (LAN Intel Gigabit)	14	Porta USB3.0
6	Porte USB2.0	15	Porta USB3.0
7	Porte USB2.0	16	Porta USB3.0
8	Porte USB2.0	17	Porta uscita ottica SPDIF
9	Porte USB2.0	18	Porta microfono (rosa)

** Ci sono due LED sulla porta LAN. Le indicazioni dei LED sono esposte nella tavola che segue.*

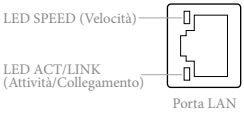

LED Activity (Attività) / Link (Collegamento)		LED Speed (Velocità)	
Stato	**Descrizione**	**Stato**	**Descrizione**
Spento	Nessun collegamento	Spento	Connessione a 10Mbps
Lampeggiante	Attività dati	Arancione	Connessione a 100Mbps
Acceso	Collegamento	Verde	Connessione a 1Gbps

*** Il connettore eSATA è condiviso con connettore SATA3_4.*

2.3 Veduta interiore

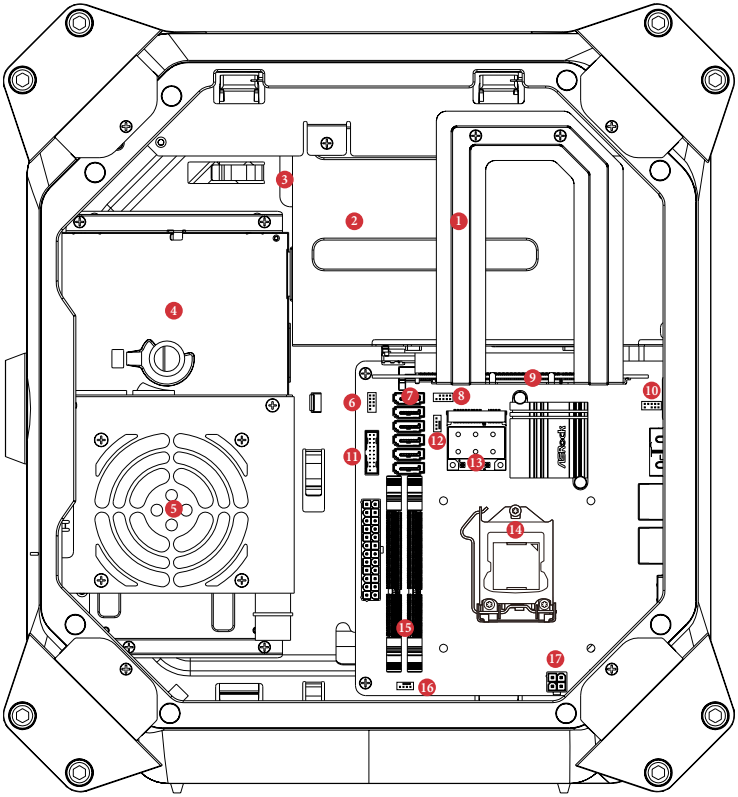

No.	Descrizione
1	Staffa di contenimento della scheda riser
2	Supporto scheda VGA
3	Cassetto unità disco rigido (compatibile con 4 x HDD 2,5" o 1 x HDD 3,5")
4	Cassetto ODD + HDD 2,5"
	(Compatibile con 1 x ODD slot-in e 1 x HDD 2,5")
5	Alimentatore (450W)
6	Header sul pannello del sistema
7	Connettori SATA 3.0
8	Embases USB 2.0
9	Alloggio PCIe

10	Connettore audio frontale
11	Embases USB 3.0
12	Connettore ventola ausiliaria
13	Modulo WiFi 2T2R (802.11ac)
14	Socket CPU
15	Prese DIMM
16	Connettore ventola telaio
17	Connettore alimentazione ATX 12V

I dischi rigidi non sono inclusi con questo sistema.

1 Introducción

Gracias por adquirir su M8, un sistema fiable de pequeño formato para juegos fabricado siguiendo el estricto y constante control de calidad de ASRock. Proporciona un rendimiento excelente con un diseño resistente conforme al compromiso de calidad y durabilidad de ASRock.

Dado que las especificaciones de hardware se pueden actualizar, el contenido de esta documentación está sujeto a cambio sin previo aviso. En el caso de que se produzca cualquier modificación en esta documentación, la versión actualizada se publicará en el sitio Web de ASRock sin previo aviso. Si requiere soporte técnico relacionado con este producto, visite nuestro sitio Web para obtener información específica acerca del modelo que está utilizando. Sitio Web de ASRock: http://www.asrock.com.

1.1 Contenido del paquete

- Sistema de pequeño formato M8 con:
  Chasis M8
  Placa base mini-ITX (preinstalada)
  Unidad de fuente de alimentación (preinstalada)
  Ventilador del sistema (preinstalado)
- Cable de alimentación de CA
- Destornillador de hexágono
- Juego de destornilladores
- Paquete de tornillos
- Llave de bloqueo del chasis
- VGA Support
- 6 x Cable SATA
- CD de soporte
- Guía de instalación rápida
- Manual del usuario

Si alguno de estos artículos falta o está dañado, póngase en contacto son el distribuidor autorizado.

1.2 Especificaciones del producto

Color	• Negro tormenta
Material	• Estructura de acero / Aluminio + Plástico
Dimensiones	• 372 mm (AN) X 123 mm (AL) X 400 mm (LA)
Placa base	• ASRock Z87-M8
CPU	• Admite la familia de procesadores Intel® Core™ i7 / i5 / i3 / Xeon® / Pentium® / Celeron® de la 4ª generación
Memoria	• Admite DDR3 1600/1333/1066 MHz, 2 ranuras SO-DIMM y una capacidad de hasta 16 GB
VGA	• Admite 1 tarjeta gráfica de doble ranura
Unidad óptica	• 1 x Unidad multiformato de inserción automática plana
Disco duro	• Admite una unidad de disco duro de 3,5" y una de 2,5"
WiFi + BT	• 2T2R WiFi 802.11ac + BT v4.0
E/S frontal	• 4 x USB 3.0, 1 x Micrófono, 1 x Auricular • Lector de tarjetas 4 en 1 (SD3.0/MMC/MS/MS PRO)
E/S en panel posterior	• 1 x Audio HD 7.1 con Creative Sound Core3D, • 1 x LAN Intel Gigabit, 4 x USB3.0, 4 x USB2.0, • 1 x eSATA2, 1 x DP, 1 x HDMI
Botón OLED todo en uno	• A-Command
Refrigeración	• Superior: 2 ventiladores de 70 mm. Inferior: 2 ventiladores de 70 mm
Fuente de alimentación	• Fuente de alimentación SFX de 450 W

2 Información general del producto

En este capítulo se proporcionan diagramas que muestran la ubicación de los componentes importantes de su M8.

2.1 Vista frontal

Nº	Descripción
1	A-Command (botón OLED todo en uno)
2	Botón de expulsión de la unidad de disco ópticaA-Command (botón OLED todo en uno)
3	4 puertos USB 3.0
4	Lector de tarjetas 4 en 1 (SD3.0/MMC/MS/MS PRO)
5	Conector de micrófono
6	Conector de auriculares

2.1.1 Función de A-Command

A-Command es un mando de control multifunción que se utiliza para recorrer varias funciones.

Controlar A-Command

- Gire el mando para cambiar entre las funciones u opciones principales.
- Presione una vez para confirmar la selección.

Encender el sistema

Presione A-Command para encender la alimentación del sistema. Espere a que el sistema operativo se cargue automáticamente.

Apagar el sistema

Cuando el OLED muestre logotipo de M8 y la fecha y hora, presione A-Command y seleccione "Sí" para apagar la alimentación del sistema.

Antes de entrar en Windows

Antes de entrar en el sistema operativo, hay tres funciones principales.

- **Logotipo de M8 y fecha y hora:**
  Después de que aparezca el logotipo durante diez segundos, la pantalla muestra la fecha y hora.
  La pantalla se apagará si permanece inactiva durante cinco minutos.
- **Luz:**
  Encienda y apague la luz de la carcasa.
- **Hora:**
  Active y desactive la hora.
  Si esta opción se activa, las pantallas del logotipo de M8 y de fecha y hora pasarán a estar disponibles. Si esta opción se desactiva, las pantallas del logotipo de M8 y de fecha y hora se ocultarán.

En Windows:

Después de entrar en el sistema operativo, hay seis funciones principales.

- **Logotipo de M8 y fecha y hora:**
  Después de que aparezca el logotipo durante diez segundos, la pantalla muestra la fecha y hora.
  La pantalla se apagará si permanece inactiva durante cinco minutos.

- **Volumen:**
  Suba o baje el nivel de volumen girando el mando hacia la derecha o hacia la izquierda.

- **Modo:**
  Alterne entre tres modos de administración de energía: Eco, Estándar o Velocidad.

- **Información:**
  Alterne entre varios tipos de información importante para comprobar el estado del sistema. La pantalla OLED muestra la frecuencia de la CPU, el uso de la CPU, el uso de la LAN o los datos APM*.
  *APM (Actions per minute, es decir, Acciones por minuto) mide el número de acciones de teclado y de clic con el ratón que puede realizar en un minuto. Para averiguar con qué rapidez puede mover sus dedos, presione A-Command una vez para iniciar el recuento APM. Presione A-Command de nuevo para detenerlo.

- **Luz:**
  Encienda y apague la luz de la carcasa o habilite la función Good Night LED*.
  Activada: enciende la luz de la carcasa.
  Desactivada: apaga la luz de la carcasa.
  Todo desactivado: Apague la luz de la carcasa; habilite la función Good Night LED.
  *La tecnología Good Night LED de ASRock mejora el entorno de sueño apagando los LED innecesarios. Al habilitar Good Night LED, los LED de alimentación y de disco duro se apagarán cuando esté encendido. Good Night LED también apagará automáticamente los LED de alimentación y del teclado cuando el sistema entre en el modo de suspensión o hibernación.

- **Hora:**
  Active y desactive la hora.
  Si esta opción se activa, las pantallas del logotipo de M8 y de fecha y hora pasarán a estar disponibles. Si esta opción se desactiva, las pantallas del logotipo de M8 y de fecha y hora se ocultarán.

2.2 Vista posterior

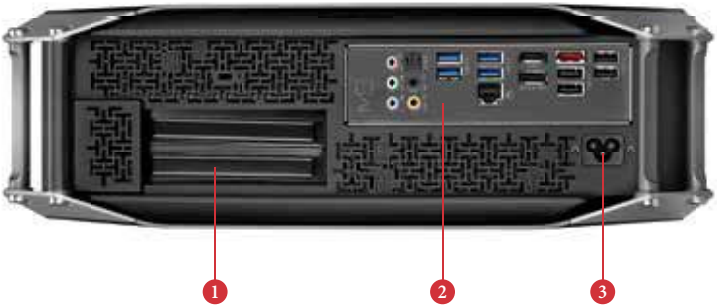

Nº	Descripción
1	Tapas de ranura PCIe
2	Panel de E/S
3	Conector de alimentación de entrada de CA

2.2.1 Panel de E/S

Nº	Descripción	Nº	Descripción
1	Puerto de entrada de línea (azul claro)	10	Puerto eSATA2**
2	Puerto de salida de línea (verde lima)	11	DisplayPort
3	Puerto central y para amplificador de graves (naranja)	12	Puerto HDMI
4	Puerto Salida de los altavoces traseros (negro)	13	Puerto USB3.0
5	Puerto LAN RJ-45* (LAN Intel Gigabit)	14	Puerto USB3.0
6	Puertos USB2.0	15	Puerto USB3.0
7	Puertos USB2.0	16	Puerto USB3.0
8	Puertos USB2.0	17	Puerto de salida SPDIF óptica
9	Puertos USB2.0	18	Puerto de micrófono (rosa)

** Hay dos LED en el puerto LAN. Consulte la tabla siguiente para obtener información sobre los indicadores LED del puerto LAN.*

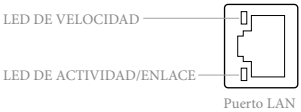

LED de actividad y enlace		LED de velocidad	
Estado	Descripción	Estado	Descripción
Apagado	No hay enlace	Apagado	Conexión de 10 Mbps
Intermitente	Actividad de datos	Naranja	Conexión de 100 Mbps
Encendido	Enlace	Verde	Conexión de 1 GB

*** El conector eSATA se comparte con el conector SATA3_4.*

2.3 Vista interna

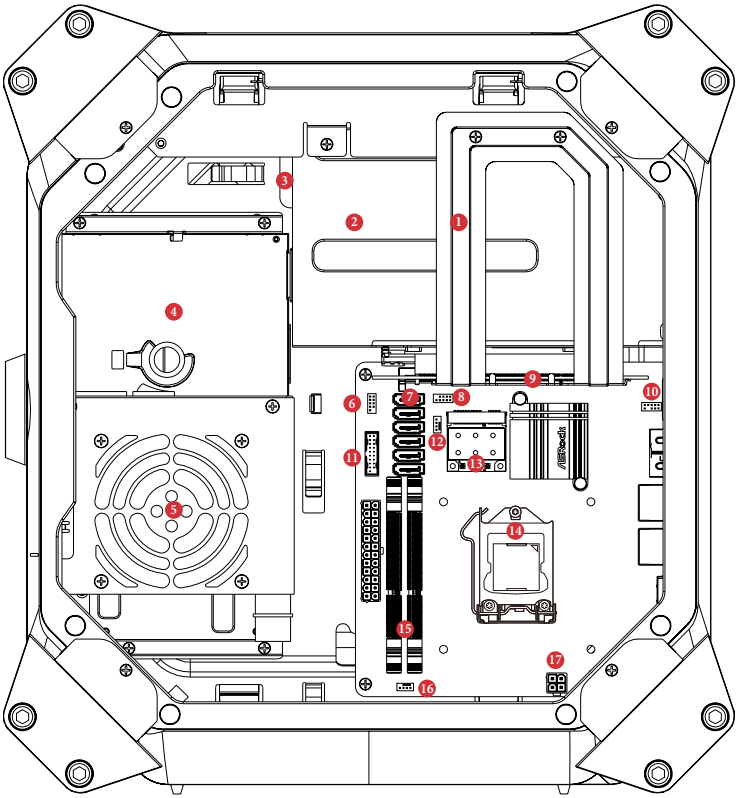

Nº	Descripción
1	Soporte de retención de la tarjeta vertical (tipo riser)
2	Soporte de la tarjeta VGA
3	Bandeja para unidad de disco duro (compatible con 4 unidades de disco duro de 2,5" o 1 unidad de disco duro de 3,5)
4	Bandeja para unidad de disco óptica + unida de disco duro de 2,5"
	(compatible con 1 unidad de disco óptica de inserción automática y 1 unidad de disco duro de 2,5")
5	Fuente de alimentación (450 W)
6	Cabezal del panel del sistema
7	Conectores SATA 3.0
8	Cabezales USB 2.0

9	Ranura PCI
10	Conector de audio frontal
11	Cabezales USB 3.0
12	Conector para el ventilador auxiliar
13	Módulo WiFi 2T2R (802.11ac)
14	Zócalo para CPU
15	Zócalos DIMM
16	Conector para el ventilador del chasis
17	Conector de alimentación ATX de 12 V

Las unidades de disco duro no se incluyen con este sistema.

1 Введение

Благодарим вас за приобретение надежной игровой базовой системы M8, выпускаемой под постоянным строгим контролем компании ASRock. Система обеспечивает великолепную производительность и характеризуется прочной конструкцией в соответствии с требованиями компании ASRock в отношении качества и долговечности.

В случае обновления спецификации на аппаратное обеспечение содержимое настоящей документации может быть изменено без предварительного уведомления. При изменении содержимого настоящего документа его обновленная версия будет доступна на веб-сайте ASRock без предварительного уведомления. Для получения технической поддержки данного изделия посетите веб-сайт и найдите на нем информацию об используемой модели. Веб-сайт ASRock http://www.asrock.com.

1.1 Комплект поставки

- Базовая система M8 со следующими компонентами:
  Корпус M8
  Материнская плата Mini-ITX (предустановленная)
  Блок питания (предустановленный)
  Вентилятор системы (предустановленный)
- Кабель питания переменного тока
- Шестигранная отвертка
- Набор отверток
- Комплект винтов
- Замок с ключом для корпуса
- VGA Support
- 6 x кабель SATA
- Диск с ПО
- Краткое руководство по установке
- Руководство пользователя

Если какой-либо из указанных компонентов отсутствует или поврежден, обратитесь к официальному дилеру.

1.2 Спецификация на изделие

Цвет	• "Черная буря"
Материал	• Металлический корпус/ алюминий + пластик
Размер	• 372 мм (Ш) x 123 мм (В) x 400 мм (Д)
Материнская плата	• ASRock Z87-M8
ЦП	• Поддержка процессоров 4-^{го} поколения Intel® Core™ i7 / i5 / i3 / Xeon® / Pentium® / Celeron®
Память	• Поддержка модулей памяти DDR3 1600/1333/1066 МГц, 2 гнезда SO-DIMM, не более 16 ГБ
VGA	• Поддержка 1 видеокарты с двумя гнездами
Оптический диск	• 1 тонкий входной разъем Super-Multi Drive
Жесткий диск	• Поддержка жестких дисков 3,5" и 2,5"
WiFi + BT	• 2T2R WiFi 802.11ac + BT v4.0
Порты ввода-вывода на передней панели	• 4 x USB 3.0, 1 x микрофон, 1 x Наушники • Устройство чтения карт 4-в-1 (SD3.0/MMC/MS/MS PRO)
Порты ввода-вывода на задней панели	• 1 разъем 7.1HD audio с процессором Creative Sound Core3D • 1 x Intel Gigabit LAN, 4 x USB3.0, 4 x USB2.0 • 1 x eSATA2, 1 x DP, 1 x HDMI
Универсальная кнопка ОСИД	• A-Command
Охлаждение	• Сверху: 2 вентилятора 70 мм; Снизу: 2 вентилятора 70 мм
Источник питания	• Блок питания SFX 450 Вт

2 Обзор изделия

В данной главе представлены диаграммы расположения важных компонентов M8.

2.1 Вид спереди

№	Описание
1	A-Command (Универсальная кнопка ОСИД)
2	Кнопка извлечения оптического диска
3	4 порта USB 3.0
4	Устройство чтения карт 4-в-1 (SD3.0/MMC/MS/MS PRO)
5	Разъем для подключения микрофона
6	Разъем для подключения наушников

2.1.1 Функции A-Command

A-Command - это многоцелевая ручка управления, которая используется для выбора различных функций.

Управление с помощью кнопки "A-Command"

- Поверните ручку для выбора основных функций или параметров.
- Нажмите один раз для подтверждения выбора.

Включение питания системы

Чтобы включить питание системы, нажмите на кнопку "A-Command" Подождите, пока выполняется автоматическая загрузка операционной системы.

Выключение питания системы

После появления на ОСИД логотипа M8/ Даты и времени нажмите на кнопку A-Command и выберите "Да", чтобы отключить питание системы.

Перед входом в ОС Windows

Перед входом в ОС доступны три основные функции.

- **Логотип M8 / Дата и время:**
  Через десять секунд после появления логотипа на экране отображается дата и время.
  При отсутствии активности в течение пяти минут дисплей отключается.
- **Подсветка:**
  Включить/выключить подсветку в корпусе.
- **Время:**
  Включить/выключить время.
  При выборе параметра "вкл." отображаются экраны "логотип M8/ Дата и время". При выборе параметра "выкл." экраны "логотип M8/ Дата и время" скрыты.

В ОС Windows:

После входа в ОС доступно шесть основных функций.

- **Логотип M8 / Дата и время:**
  Через десять секунд после появления логотипа на экране отображается дата и время.
  При отсутствии активности в течение пяти минут дисплей отключается.

- **Громкость:**
  Чтобы увеличить/уменьшить громкость, поверните ручку вправо/влево.

- **Режим:**
  Доступно три режима управления питанием: Эко, Стандартный и Скоростной.

- **Информация:**
  Позволяет выбирать различные типы важной информации для проверки состояния системы. На экране ОСИД отображается частота ЦП, использование ЦП, использование LAN и APM*.
  *APM (действий в минуту) показывает число щелчков/действий клавиатуры или мыши, выполняемых за минуту. Чтобы узнать о скорости движения своих пальцев, нажмите на кнопку A-Command один раз для запуска счетчика APM. Для отключения счетчика снова нажмите на кнопку A-Command один раз.

- **Подсветка:**
  Включить/выключить подсветку в корпусе или активировать функцию Good Night LED*.
  Вкл.: Включение подсветки в корпусе
  Выкл.: Выключение подсветки в корпусе
  Выкл. все: Выключить подсветку в корпусе; активировать функцию Good Night LED
  *Технология Good Night LED компании ASRock повышает эффективность режима неактивности, отключая ненужные светодиодные индикаторы. Активация технологии Good Night LED позволяет отключить индикаторы питания и жесткого диска при включении питания системы. Функция Good Night LED также автоматически отключает индикаторы питания и клавиатуры при переходе системы в режим ожидания/сна.

- **Время:**
  Включить/выключить время.
  При выборе параметра "вкл." отображаются экраны "логотип M8/ Дата и время". При выборе параметра "выкл." экраны "логотип M8/ Дата и время" скрыты.

2.2 Вид сзади

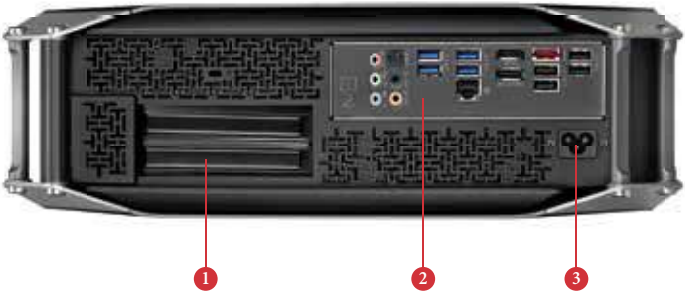

№	Описание
1	Крышки гнезда PCIe
2	Панель ввода-вывода
3	Разъем подключения к сети переменного тока

2.2.1 Панель ввода-вывода

№	Описание	№	Описание
1	Порт линейного входа (голубой)	10	Порт eSATA2**
2	Порт линейного выхода (салатовый)	11	DisplayPort
3	Центральный канал/сабвуфер (оранжевый)	12	Порт HDMI
4	Порт выхода тыловых динамиков (черный)	13	Порт USB3.0
5	Порт LAN RJ-45* (Intel Gigabit LAN)	14	Порт USB3.0
6	Порты USB2.0	15	Порт USB3.0
7	Порты USB2.0	16	Порт USB3.0
8	Порты USB2.0	17	Оптический порт вывода SPDIF
9	Порты USB2.0	18	Разъем для подключения микрофона (розовый)

** Порт LAN оснащен двумя светодиодными индикаторами. Значения индикаторов порта LAN представлены в следующей таблице.*

Порт LAN

Индикатор активности/связи		Индикатор скорости	
Состояние	Описание	Состояние	Описание
Выкл.	Нет связи	Выкл.	Подключение со скоростью 10 мб/с
Мигает	Активность данных	Оранжевый	Подключение со скоростью 100 мб/с
Вкл.	Связь	Зеленый	Подключение со скоростью 1 гб/с

*** Разъем eSATA используется совместно с разъемом SATA3_4.*

2.3 Вид внутри

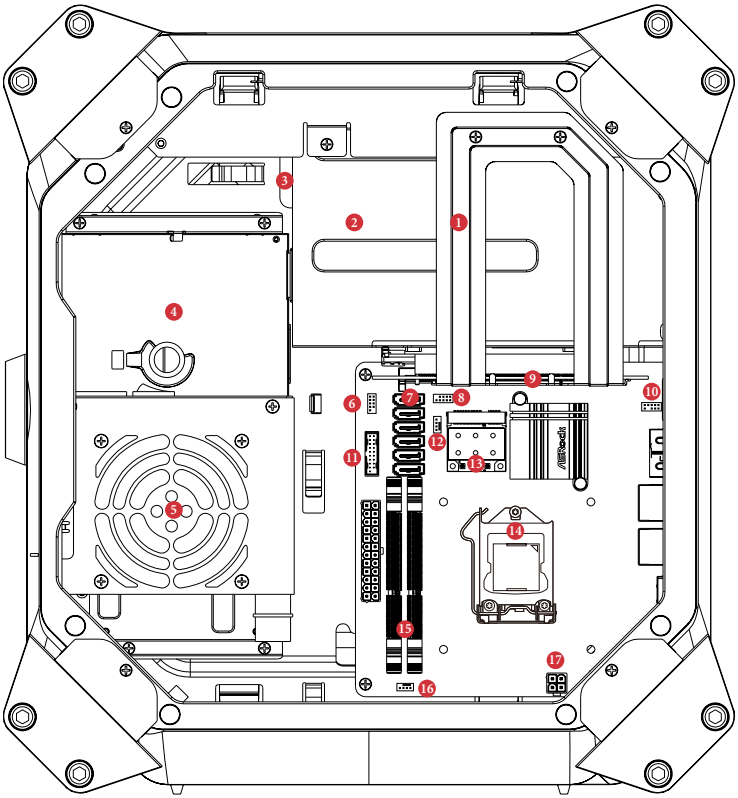

№	Описание
1	Скобка для крепления переходной платы
2	Держатель карты VGA
3	Лоток для жесткого диска (совместимый с 4 жесткими дисками 2,5" или 1 жестким диском 3,5")
4	Лоток для оптического диска + жесткого диска 2,5"
	(совместимый с 1 разъемом для подключения оптического диска и 1 жестким диском 2,5")
5	Блок питания (450 Вт)
6	Колодка системной панели
7	Разъемы SATA 3.0
8	Колодки USB 2.0.

9	Гнездо PCIe
10	Аудиоразъем на передней панели
11	Колодки USB 3.0.
12	Разъем дополнительного вентилятора
13	Модуль 2T2R WiFi (802.11ac)
14	Гнездо ЦП
15	Гнезда DIMM
16	Разъем вентилятора корпуса
17	Разъем питания ATX 12 В

Данная система поставляется без жестких дисков.

1 Introdução

Obrigado por ter comprado o M8, um sistema barebone fiável para jogos produzido sob os rigorosos critérios de controlo de qualidade da ASRock. Este sistema oferece um excelente desempenho com um design robusto em conformidade com o compromisso da ASRock em fabricar produtos de qualidade e resistentes.

Dado que as especificações do hardware poderão ser actualizadas, o conteúdo desta documentação estará sujeito a alterações sem aviso prévio. Caso ocorram modificações a esta documentação, a versão actualizada estará disponível no Web site da ASRock sem aviso prévio. Se necessitar de assistência técnica relacionada com este produto, visite o nosso Website para obter informações específicas acerca do modelo que está a utilizar. Website da ASRock: http://www.asrock.com.

1.1 Conteúdo da embalagem

- Sistema Barebone M8 com:
  Chassis M8
  Placa principal Mini-ITX (pré-instalada)
  Fonte de alimentação (pré-instalada)
  Ventoinha do sistema (pré-instalada)
- Cabo de alimentação AC
- Chave de fendas hexagonal
- Conjunto de chaves de fendas
- Pacote de parafusos
- Chave de bloqueio do chassis
- VGA Support
- 6 x cabo SATA
- CD de suporte
- Guia de instalação rápida
- Manual do utilizador

Se quaisquer dos itens estiver em falta ou danificado, contacte o revendedor autorizado.

1.2 Especificações do produto

Cor	• Preto tempestade
Material	• Corpo em aço / Alumínio + Plástico
Dimensões	• 372 mm (L) x 123 mm (A) x 400 mm (C)
Placa principal	• ASRock Z87-M8
CPU	• Suporta processadores Intel® Core™ i7 / i5 / i3 / Xeon® / Pentium® / Celeron® de 4ª geração
Memória	• Suporta DDR3 1600/1333/1066 MHz, 2 x ranhuras SO-DIMM, Máx. 16GB
VGA	• Suporta 1 x placa gráfica de ranhura dupla
Unidade óptica	• 1 x Unidade Super-Multi de entrada de ranhura
Disco rígido	• Suporta unidades HDD de 2,5” e 3,5"
WiFi + BT	• 2T2R WiFi 802.11ac + BT v4.0
E/S frontal	• 4 x USB 3.0, 1 x MIC, 1 x Auscultadores • Leitor de cartões 4-em-1 (SD3.0/MMC/MS/MS PRO)
E/S traseira	• 1 x Áudio HD 7,1 com Creative Sound Core3D, • 1 x Intel Gigabit LAN, 4 x USB3.0, 4 x USB2.0, • 1 x eSATA2, 1 x DP, 1 x HDMI
Botão OLED tudo em um	• A-Command
Arrefecimento	• Superior: 2 x ventoinhas de 70 mm, Inferior: 2 x ventoinhas de 70 mm
Fonte de alimentação	• SFX PSU 450W

2 Descrição geral do produto

Este capítulo apresenta diagramas que mostram a localização dos componentes do sistema M8.

2.1 Vista frontal

N.º	Descrição
1	A-Command (Botão OLED tudo em um)
2	Botão de ejecção do disco óptico
3	4 x portas USB 3.0
4	Leitor de cartões 4-em-1 (SD3.0/MMC/MS/MS PRO)
5	Tomada para microfone
6	Tomada para auscultadores

2.1.1 A função do A-Command

O A-Command é um botão controlador multifunções que é utilizado para percorrer as diversas funções.

Controlar o A-Command

- Rode o o botão para alternar entre as funções principais ou opções.
- Prima uma vez para confirmar a sua selecção.

Ligar o sistema

Prima o botão A-Command para ligar o sistema. Aguarde que o sistema operativo carregue automaticamente.

Desligar o sistema

Quando o visor OLED mostrar o logótipo M8 Logo / data e hora, prima o botão A-Command e seleccione "Yes" (Sim) para desligar o sistema.

Antes de entrar no Windows

Existem três funções principais antes de entrar no SO.

- **Logótipo M8 / Data e hora:**
  Após a exibição do logótipo durante dez segundos, o visor exibirá a data e hora. O visor irá desligar se estiver inactivo durante cinco segundos.
- **Luz:**
  Ligar/desligar a luz da caixa.
- **Hora:**
  Activar/desactivar a exibição da hora.
  Se esta opção estiver activada, o visor apresentará o logótipo M8 / Data e hora.
  Se esta opção estiver desactivada, o visor não apresentará o logótipo M8 / Data e hora.

No Windows:

Existem seis funções principais depois de entrar no SO.

- **Logótipo M8 / Data e hora:**
  Após a exibição do logótipo durante dez segundos, o visor exibirá a data e hora. O visor irá desligar se estiver inactivo durante cinco segundos.

- **Volume:**
  Aumentar/diminuir o nível do volume rodando o botão para a direita/esquerda.

- **Modo:**
  Alternar entre três modos de gestão de energia - Eco, Normal ou Velocidade.

- **Info:**
  Alternar entre vários tipos de informações críticas para verificar o estado do sistema. O visor OLED mostra a frequência de CPU, utilização de CPU, utilização de LAN, ou dados APM*.
  *APM (Acções por minuto) mede o número de acções de clique no teclado/rato que podem ser executadas num minuto. Para saber com que rapidez os seus dedos podem mover-se, prima o botão A-Command uma vez para iniciar a contagem APM. Prima o botão A-Command novamente para parar.

- **Luz:**
  Ligar/desligar a luz da caixa ou activar a função de LED de Boa Noite*.
  Ligar: Ligar a luz da caixa
  Desligar: Desligar a luz da caixa
  Desligar tudo: Desligar a luz da caixa; activar a função de LED de Boa Noite
  *A tecnologia LED de Boa Noite da ASRock proporciona-lhe um melhor ambiente de sono desligando os LEDs não essenciais. Ao activar a função LED de Boa Noite, os LEDs de Energia/HDD serão desligados quando o sistema estiver ligado. A função de LED de Boa Noite irá também desligar automaticamente os LEDs de Energia e do Teclado quando o sistema entrar no modo de Suspensão/Hibernação.

- **Hora:**
  Activar/desactivar a exibição da hora.
  Se esta opção estiver activada, o visor apresentará o logótipo M8 / Data e hora.
  Se esta opção estiver desactivada, o visor não apresentará o logótipo M8 / Data e hora.

2.2 Vista posterior

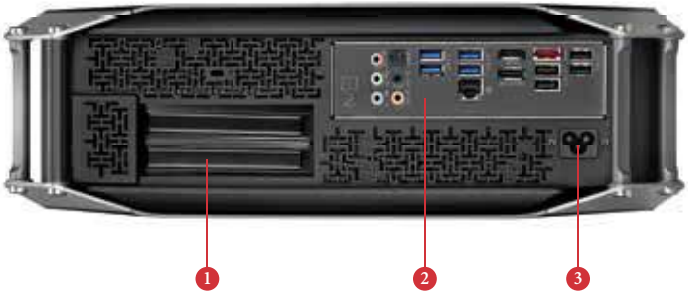

N.º	Descrição
1	Tampas de ranhura PCIe
2	Painel de E/S
3	Conector de alimentação AC

2.2.1 Painel de E/S

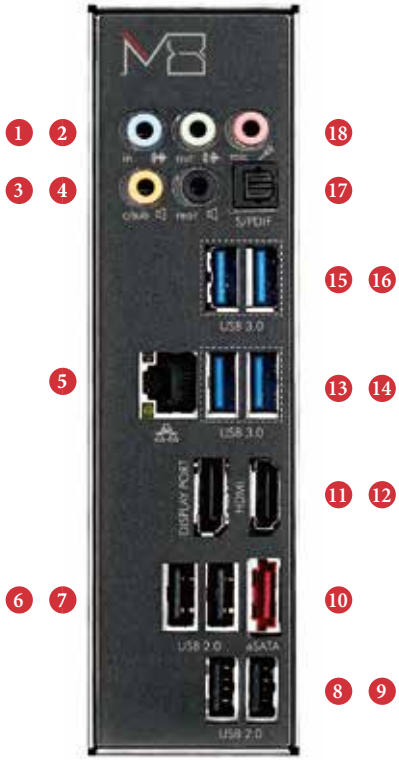

N.º	Descrição	N.º	Descrição
1	Porta entrada de linha (azul claro)	10	Porta eSATA2**
2	Porta de saída de linha (verde claro)	11	DisplayPort
3	Porta de Subwoofer/Centro (laranja)	12	Porta HDMI
4	Porta de saída do altifalante traseiro (preto)	13	Porta USB3.0
5	Porta LAN RJ-45* (Intel Gigabit LAN)	14	Porta USB3.0
6	Portas USB 2.0	15	Porta USB3.0
7	Portas USB 2.0	16	Porta USB3.0
8	Portas USB 2.0	17	Porta de saída óptica SPDIF
9	Portas USB 2.0	18	Porta de microfone (rosa)

** Existem dois LEDs na porta LAN. Consulte a tabela abaixo para as indicações do LED da porta LAN.*

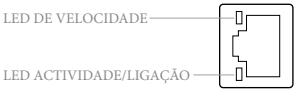

Porta LAN

LED de actividade/ligação		LED de Velocidade	
Estado	Descrição	Estado	Descrição
Desligado	Sem ligação	Desligado	Ligação de 10Mbps
Intermitente	Actividade de dados	Laranja	Ligação de 100Mbps
Ligado	Ligação	Verde	Ligação de 1Gbps

*** O conector eSATA é partilhado pelo conector SATA3_4.*

2.3 Vista interna

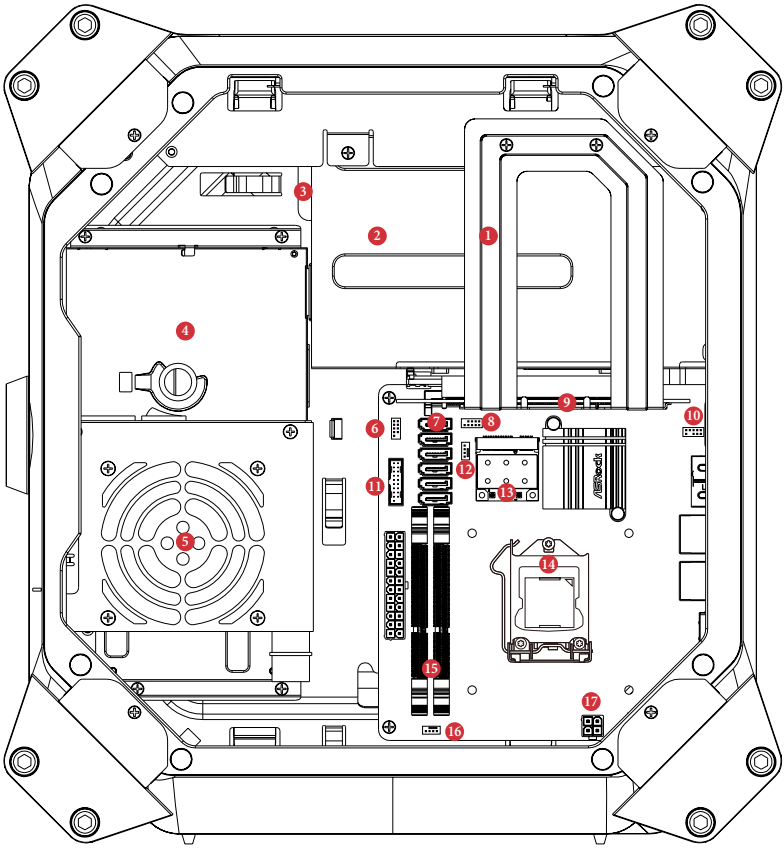

N.º	Descrição
1	Suporte de retenção da placa
2	Suporte da placa VGA
3	Compartimento da unidade de disco rígido (compatível com 4 x HDD de 2,5" ou 1 x HDD de 3,5")
4	Compartimento de ODD + HDD de 2,5" HDD
	(compatível com 1 x ODD de entrada de ranhura e 1 x HDD de 2,5")
5	Fonte de alimentação (450W)
6	Terminal do painel de sistema
7	Conectores SATA 3.0
8	Terminais USB 2,0
9	Ranhura PCIe

10	Conector de áudio do painel frontal
11	Terminais USB 3,0
12	Conector da ventoinha auxiliar
13	Módulo WiFi 2T2R (802.11ac)
14	CPU socket

Este sistema não inclui os discos rígidos.

1 개요

ASRock 의 일관되고 엄격한 품질관리 하에 생산되어 신뢰성이 우수한 게이밍 베어본 시스템 M8 을 구입해 주셔서 감사합니다 . 이 시스템은 품질과 내구성에 대한 ASRock 의 기준에 부합하는 우수한 성능과 견고한 설계를 제공합니다 .

하드웨어을 업데이트할 수도 있기 때문에 , 이 문서의 내용은 예고 없이 변경될 수 있습니다 . 이 설명서가 변경될 경우 , 업데이트된 버전은 ASRock 의 웹사이트에서 추가 통지 없이 제공됩니다 . 이 제품과 관련하여 기술적 지원이 필요한 경우 , 당사의 웹사이트를 방문하여 사용 중인 모델에 대한 구체적 정보를 구하십시오 . ASRock 웹사이트 : http://www.asrock.com.

1.1 포장 내용물

- M8 베어본 시스템 및 :
  M8 섀시
  Mini-ITX 마더보드 (사전 설치)
  전원공급장치 (사전 설치)
  시스템 팬 (사전 설치)
- AC 전원 케이블
- 육각 스크루드라이버
- 스크루드라이버 세트
- 나사 패키지
- 섀시 잠금 키
- VGA Support
- SATA 케이블 6 개
- 지원 CD
- 빠른 설치 안내서
- 사용 설명서

없거나 손상된 품목이 있을 경우 공인 판매점에 문의하시기 바랍니다 .

1.2 제품 규격

색	• 스톰 블랙
재질	• 강철 본체 / 알루미늄 + 플라스틱
치수	• 372mm (W) x 123mm (H) x 400mm (L)
마더보드	• ASRock Z87-M8
CPU	• 4 세대 Intel® Core™ i7 / i5 / i3 / Xeon® / Pentium® / Celeron® 프로세서 제품군 지원
메모리	• DDR3 1600/1333/1066 MHz, SO-DIMM 슬롯 2 개 , 최대 16GB 지원
VGA	• 듀얼 슬롯 그래픽 카드 1 개 지원
광학 드라이브	• 슬림 슬롯 삽입식 Super-Multi 드라이브 1 개 지원
하드 디스크	• 3.5" HDD 및 2.5" HDD 지원
WiFi + BT	• 2T2R WiFi 802.11ac + BT v4.0 지원
전면 I/O	• USB 3.0 포트 4 개 , MIC 잭 1 개 , 헤드폰 잭 1 개 • 4-in-1 카드 리더 (SD3.0/MMC/MS/MS PRO)
후면 I/O	• Creative Sound Core3D 지원 7.1 HD 오디오 포트 1 개 , • Intel Gigabit LAN 포트 1 개 , USB 3.0 포트 4 개 , USB 2.0 포트 4 개 , • eSATA2 포트 1 개 , DP 포트 1 개 , HDMI 포트 1 개
올인원 OLED **버튼**	• A-Command
냉각	• 상부 : 70mm 팬 2 개 , 하부 : 70mm 팬 2 개
전원공급장치	• SFX PSU 450W

2 제품 개요

이 장에서는 M8 의 중요 구성부품의 위치를 보여주는 다이어그램을 제공합니다 .

2.1 앞면

번호	설명
1	A-Command (올인원 OLED 버튼)
2	광학 디스크 드라이브 꺼내기 버튼
3	USB 3.0 포트 4 개
4	4-in-1 카드 리더 (SD3.0/MMC/MS/MS PRO)
5	마이크 잭
6	헤드폰 잭

2.1.1 A-Command 의 기능

A-Command 는 여러 기능 사이에서 전환하는 데 사용되는 다목적 컨트롤러 스위치입니다 .

A-Command 조절

- 스위치를 돌려 주요 기능 또는 옵션 사이에서 전환합니다 .
- 한 번 누르면 선택이 확인됩니다 .

시스템 켜기

A-Command 를 눌러 시스템 전원을 켭니다 . 운영체제가 자동으로 로드할 때까지 기다립니다 .

시스템 끄기

OLED 가 M8 로고 / 날짜 및 시간을 표시하면 A-Command 를 눌러 "Yes"(예) 를 선택하여 시스템 전원을 끕니다 .

Windows 에 들어가기 전에

OS 에 들어가기 전에 사용되는 세 개의 주요 기능이 있습니다 .

- **M8 로고 / 날짜 및 시간 :**
  로고가 10 초 동안 표시된 후 화면에서는 날짜와 시간을 표시합니다 .
  5 분 동안 아무 작업도 하지 않을 경우 화면이 꺼집니다 .
- **라이트 :**
  케이스의 라이트를 켜고 끕니다 .
- **시간 :**
  시간을 켜고 끕니다 .
  이 옵션을 켜짐으로 설정하면 , M8 로고 / 날짜 및 시간 화면을 이용할 수 있습니다 . 이 옵션을 꺼짐으로 설정하면 , M8 로고 / 날짜 및 시간 화면을 숨깁니다 .

Windows 에서 :

OS 에 들어간 후 사용되는 여섯 개의 주요 기능이 있습니다 .

- **M8 로고 / 날짜 및 시간 :**
  로고가 10 초 동안 표시된 후 화면에서는 날짜와 시간을 표시합니다 .
  5 분 동안 아무 작업도 하지 않을 경우 화면이 꺼집니다 .

- **볼륨 :**
  스위치를 오른쪽 / 왼쪽으로 돌려 볼륨 레벨을 높이거나 낮춥니다 .

- **모드 :**
  세 개의 전원 관리 모드 , 즉 Eco(절전 모드), Standard(표준 모드) 또는 Speed(고속 모드) 사이에서 전환합니다 .

- **정보 :**
  시스템의 상태를 점검하기 위한 중요 정보의 여러 유형 사이에서 전환합니다 . OLED 화면에서는 CPU 주파수 , CPU 사용률 , LAN 사용률 또는 APM* 데이터를 표시합니다 .
  *APM (분당 동작수 (Actions per minute)) 은 일분에 수행할 수 있는 키보드 입력 / 마우스 클릭 횟수를 측정합니다 . 손가락이 얼마나 빨리 움직일 수 있는지 알려면 A-Command 를 한 번 눌러 APM 계수를 시작합니다 . 중지하려면 A-Command 를 다시 한 번 누릅니다 .

- **라이트 :**
  케이스의 라이트를 켜고 끄거나 Good Night LED 기능을 활성화합니다 *.
  켜짐 : 케이스의 라이트를 켭니다
  꺼짐 : 케이스의 라이트를 끕니다
  모두 꺼짐 : 케이스의 라이트를 끄고 Good Night LED 기능을 활성화합니다 .
  *ASRock Good Night LED 기술은 불필요한 LED 를 꺼서 더욱 편안하게 잠을 잘 수 있는 환경을 제공합니다 . Good Night LED 를 활성화하면 , 시스템을 켜도 전원 /HDD LED 가 꺼집니다 . 시스템이 대기 / 최대 절전 모드에 들어갈 때도 Good Night LED 는 전원 및 키보드 LED 를 자동으로 끕니다 .

- **시간 :**
  시간을 켜고 끕니다 .
  이 옵션을 켜짐으로 설정하면 , M8 로고 / 날짜 및 시간 화면을 이용할 수 있습니다 . 이 옵션을 꺼짐으로 설정하면 , M8 로고 / 날짜 및 시간 화면을 숨깁니다 .

2.2 뒷면

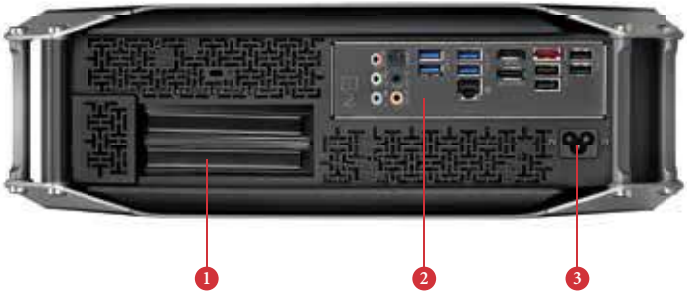

번호	설명
1	PCIe 슬롯 커버
2	I/O 패널
3	AC 입력 전원 커넥터

2.2.1 I/O 패널

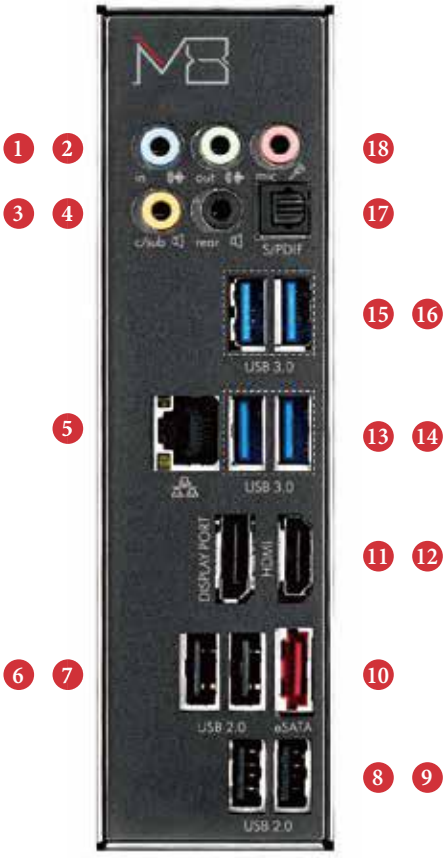
1
2
3
4
5
6
7
8
9
10
11
12
13
14
15
16
17
18
in
out
mic
c/sub
rear
S/PDIF
USB 3.0
USB 3.0
DISPLAY PORT
HDMI
USB 2.0
eSATA
USB 2.0

번호	설명	번호	설명
1	라인 입력 포트 (담청색)	10	eSATA2 포트 **
2	라인 출력 포트 (라임색)	11	DisplayPort
3	센터 / 서브우퍼 포트 (주황색)	12	HDMI 포트
4	후면 스피커 출력 포트 (검정)	13	USB3.0 포트
5	LAN RJ-45 포트 * (Intel Gigabit LAN)	14	USB3.0 포트
6	USB2.0 포트	15	USB3.0 포트
7	USB2.0 포트	16	USB3.0 포트
8	USB2.0 포트	17	광학 SPDIF 출력 포트
9	USB2.0 포트	18	마이크 포트 (분홍)

** LAN 포트에는 LED 가 두 개가 있습니다 . LAN 포트 LED 지시 정보에 대해서는 아래 표를 참조하십시오 .*

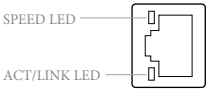

LAN 포트

Activity / Link LED		Speed LED	
상태	설명	상태	설명
꺼짐	연결 안 됨	꺼짐	10Mbps 연결
점멸	데이터 동작	주황색	100Mbps 연결
켜짐	연결	녹색	1Gbps 연결

*** eSATA 커넥터는 SATA3_4 커넥터와 공유됩니다 .*

2.3 내부

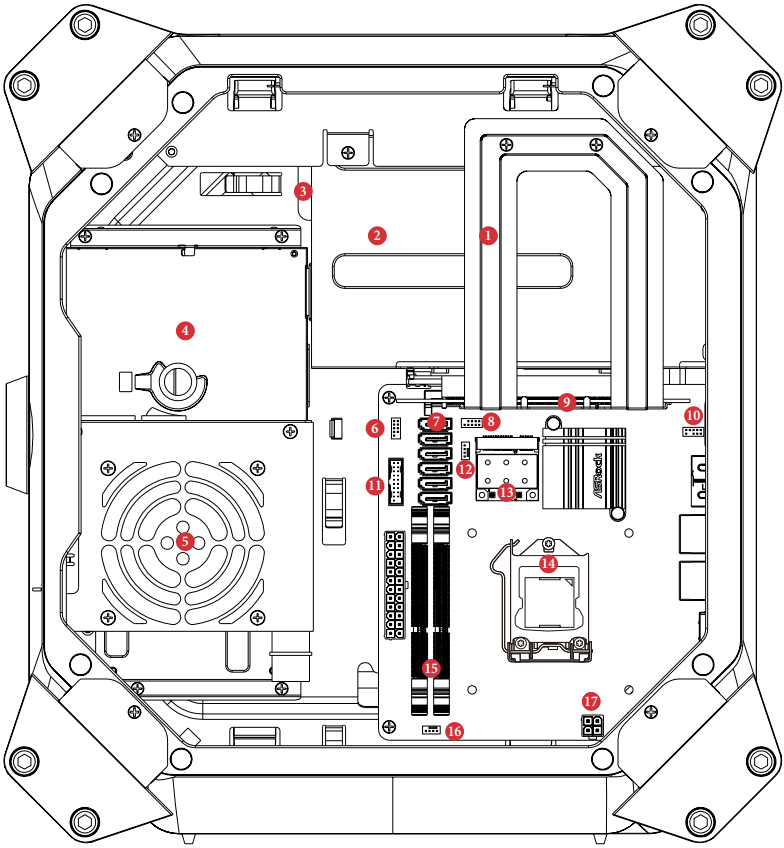

번호	설명
1	라이저 카드 고정 브래킷
2	VGA 카드 홀더
3	하드 디스크 드라이브 트레이 (2.5" HDD 4 개 또는 3.5" HDD 1 개와 호환)
4	ODD + 2.5" HDD 트레이
	(슬롯 삽입식 ODD 1 개와 2.5" HDD 1 개와 호환)
5	전원공급장치 (450W)
6	시스템 패널 헤더
7	SATA 3.0 커넥터
8	USB 2.0 헤더
9	PCIe 슬롯
10	전면 오디오 커넥터

11	USB 3.0 헤더
12	보조 팬 커넥터
13	2T2R WiFi 모듈 (802.11ac)
14	CPU 소켓
15	DIMM 소켓
16	섀시 팬 커넥터
17	ATX 12V 전원 커넥터

하드 드라이브는 별도로 구입하셔야 합니다 .

1 はじめに

M8 をお買い上げいただきまして誠にありがとうございます。M8 は ASRock の一貫した厳格な品質管理の下で製造された信頼性の高いゲーミングベアボーンシステムです。アスロックの品質と耐久性の取り組みに準拠した堅牢な設計を持つ、優れたパフォーマンスを提供します。

ハードウェアの仕様は更新されることがあるため、このマニュアルの内容は予告なしに変更することがあります。このマニュアルの内容に変更があった場合には、更新されたバージョンは、予告なくアスロックのウェブサイトから入手できるようになります。この製品に関係して技術サポートが必要な場合は、ご使用のモデルに関する詳細情報について、弊社ウェブサイトをご覧ください。ASRock ウェブサイト：http://www.asrock.com。

1.1 パッケージの内容

- M8 ベアボーンシステム：
  M8 シャーシ
  Mini-ITX マザーボード（プリインストール済み）
  電源供給ユニット（プリインストール済み）
  システムファン（プリインストール済み）
- AC 電源ケーブル
- 六角スクリュードライバー
- スクリュードライバーセット
- ねじパッケージ
- シャーシロックキー
- VGA Support
- SATA ケーブル 6 本
- サポート CD
- クイックインストールガイド
- ユーザーマニュアル

付属品が同梱されていない場合、または、破損していると思われる場合は、認定販売店までご連絡ください。

日本語

1.2 製品仕様

色	• ストームブラック
材料	• スチール製本体 / アルミニウム + プラスチック
寸法	• 372mm (幅) x 123mm (高さ) x 400mm (長さ)
マザーボード	• ASRock Z87-M8
CPU	• 第 4 世代 Intel® Core™ i7 / i5 / i3 / Xeon® / Pentium® / Celeron® プロセッサー・ファミリーに対応
メモリ	• DDR3 1600/1333/1066 MHz に対応、SO-DIMM スロット 2 個、最大 16GB
VGA	• デュアルスロットグラフィックスカード 1 枚に対応
光学ドライブ	• スロットイン方式スリムスーパーマルチドライブ 1 台
ハードディスク	• 3.5"HDD および 2.5"HDD に対応
WiFi + BT	• 2T2R WiFi 802.11ac + BT v4.0
フロント I/O	• 4 x USB 3.0、1 x マイク、1 x ヘッドフォン • 4-in-1 カードリーダー（SD3.0/MMC/MS/MS PRO）
リア I/O	• 1 x 7.1HD オーディオ、Creative Sound Core3D 搭載、 • 1 x Intel Gigabit LAN、4 x USB3.0、4 x USB2.0、 • 1 x eSATA2、1 x DP、1 x HDMI
オールインワン OLED ボタン	• A-command
冷却	• 上部 : 2 x 70mm ファン、底部 : 2 x 70mm ファン
電源供給	• SFX PSU 450W

2 製品の各部の名称

この章では、M8 の主要コンポーネントの位置を図で説明します。

2.1 前面図

番号	説明
1	A-Command（オールインワン OLED ボタン）
2	光学ディスクドライブのイジェクトボタン
3	4 x USB 3.0 ポート
4	4-in-1 カードリーダー（SD3.0/MMC/MS/MS PRO）
5	マイクロフォンジャック
6	ヘッドフォンジャック

2.1.1 A-command の機能

A-command は、さまざまな機能を切り替える際に使用する多目的コントローラノブです。

A-command を制御する

- ノブを回転してメイン機能またはオプションを切り替えます。
- 1 回押して選択を確定します。

システムの電源をオンにします。

A-command を押してシステムの電源をオンにします。オペレーティングシステムが自動的に読み込まれるまでお待ちください。

システムの電源をオフにします。

OLED に M8 Logo / Date and Time（M8 ロゴ / 日付と時刻）が表示されたら、A-command を押し、「Yes（はい）」を選択してシステムの電源をオフにします。

Windows を開く前に

OS を起動する前に、次の 3 つのメイン機能を使用できます。

- **M8 Logo / Date and Time（M8 ロゴ / 日付と時刻）:**
  ロゴが 10 秒間表示された後で、画面に日付と時刻が表示されます。
  5 分間アイドル状態のままにすると、ディスプレイはオフになります。
- **Light（ライト）:**
  ケース内のライトのオン / オフを切り替えます。
- **Time（時刻）:**
  時刻のオン / オフを切り替えます。
  このオプションをオンに設定すると、M8 Logo / Date and Time（M8 ロゴ / 日付と時刻）画面を使用できます。このオプションをオフに設定すると、M8 Logo / Date and Time（M8 ロゴ / 日付と時刻）画面は非表示になります。

日本語

Windows で使用できる機能 :

OS を起動した後で、次の 6 つのメイン機能を使用できます。

- **M8 Logo / Date and Time（M8 ロゴ / 日付と時刻）:**
  ロゴが 10 秒間表示された後で、画面に日付と時刻が表示されます。
  5 分間アイドル状態のままにすると、ディスプレイはオフになります。

- **Volume（音量）:**
  ノブを右 / 左に回転して、音量レベルを高くします / 低くします。

- **Mode（モード）:**
  次の 3 つの電源管理モードを切り替えます – Eco（エコ）、Standard（標準）、または、Speed（高速）。

- **Info（情報）:**
  さまざまな種類の重要な情報を切り替えて、システムの状態を確認します。
  OLED 画面に、CPU 周波数、CPU 使用率、LAN 使用率、または、APM* データが表示されます。
  *APM（Actions per minute、1 分あたりの操作量）で、1 分間にキーボードやマウスをクリックした回数を測定します。あなたの指の動きの速さを確認するには、A-command を 1 回押して APM のカウントを開始します。停止するには A-command をもう 1 度押します。

- **Light（ライト）:**
  ケース内のライトのオン / オフを切り替えたり、または、Good Night LED（グッドナイト LED）機能 * を有効にします。
  On（オン）: ケース内のライトをオンにします
  Off（オフ）: ケース内のライトをオフにします
  All off（すべてオフ）: ケース内のライトをオフにして、Good Night LED（グッドナイト LED）機能を有効にします
  *ASRock の Good Night LED（グッドナイト LED）テクノロジーは不必要な LED を消灯して、スリープ状態の環境を改善します。Good Night LED（グッドナイト LED）機能を有効にした場合は、システムの電源を入れると、電源 LED と HDD LED が消灯します。また、Good Night LED（グッドナイト LED）機能を有効にした場合は、システムがスタンバイモードやハイバネーションモードになると、電源 LED およびキーボード LED も自動的に消灯します。

- **Time（時刻）:**
  時刻のオン / オフを切り替えます。
  このオプションをオンに設定すると、M8 Logo / Date and Time（M8 ロゴ / 日付と時刻）画面を使用できます。このオプションをオフに設定すると、M8 Logo / Date and Time（M8 ロゴ / 日付と時刻）画面は非表示になります。

2.2 背面図

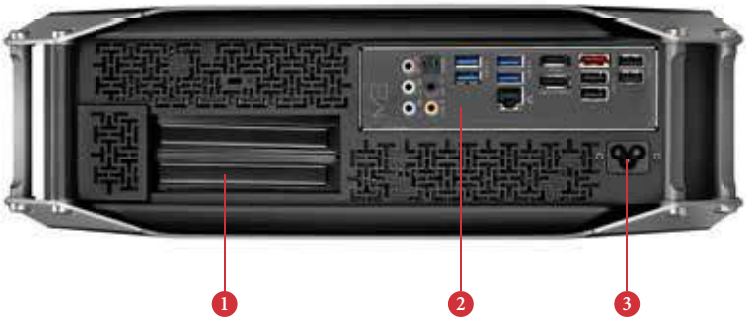

番号	説明
1	PCIe スロットカバー
2	I/O パネル
3	AC 入力電源コネクター

日本語

2.2.1 I/O パネル

日本語

番号	説明	番号	説明
1	ライン入力ポート(明るい青色)	10	eSATA2 ポート **
2	ライン出力ポート(ライム色)	11	DisplayPort
3	センター / サブウーファーポート(オレンジ色)	12	HDMI ポート
4	リアスピーカー出力ポート(黒色)	13	USB3.0 ポート
5	LAN RJ-45 ポート * (Intel Gigabit LAN)	14	USB3.0 ポート
6	USB2.0 ポート	15	USB3.0 ポート
7	USB2.0 ポート	16	USB3.0 ポート
8	USB2.0 ポート	17	オプティカル SPDIF 出力ポート
9	USB2.0 ポート	18	マイクロフォンポート(ピンク色)

** LAN ポートには LED が 2 つのあります。LAN ポートの LED 表示については下の表を参照してください。*

アクティビティ / リンク LED		速度 LED	
状態	説明	状態	説明
消灯	リンクなし	消灯	10Mbps 接続
点滅	データアクティビティ	オレンジ色	100Mbps 接続
点灯	リンク	緑色	1Gbps 接続

*** eSATA コネクターは SATA3_4 コネクターと共有します。*

2.3 内側の図

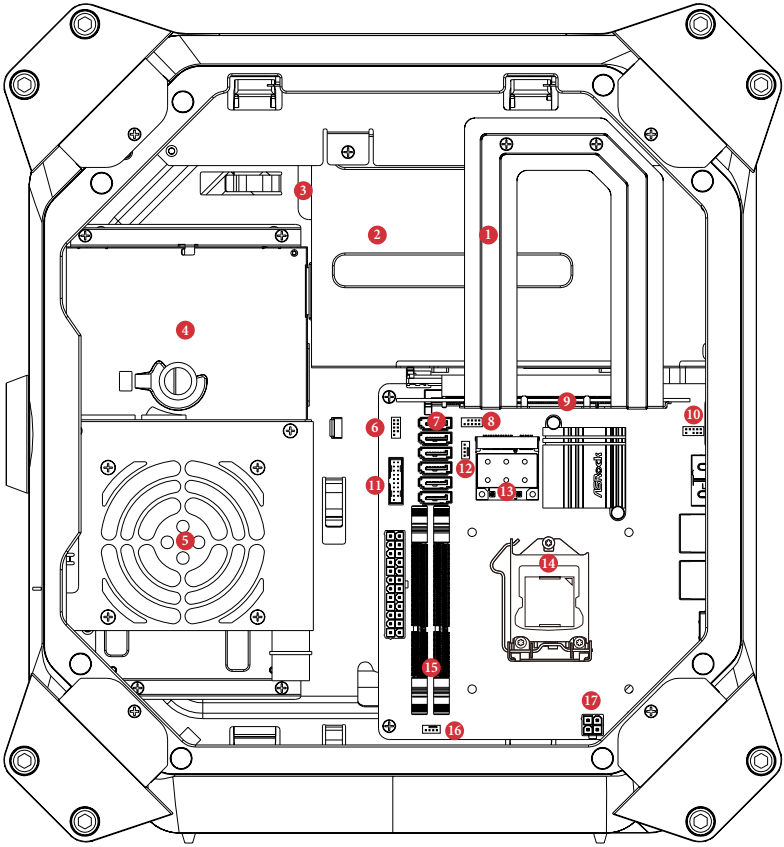

番号	説明
1	ライザーカードのリテンションブラケット
2	VGA カードホルダー
3	ハードディスクドライブトレイ（4 x 2.5" HDD または 1 x 3.5 HDD に対応します）
4	ODD + 2.5" HDD トレイ
	（1 x スロットイン方式 ODD および 1 x 2.5" HDD に対応します）
5	電源供給ユニット (450W)
6	システムパネルヘッダー
7	SATA 3.0 コネクター
8	USB 2.0 ヘッダー
9	PCIe スロット

10	フロントオーディオコネクター
11	USB 3.0 ヘッダー
12	補助ファンコネクター
13	2T2R WiFi モジュール (802.11ac)
14	CPU ソケット
15	DIMM ソケット
16	シャーシファンコネクター
17	ATX 12V 電源コネクター

このシステムにはハードドライブは含まれていません。

日本語