GEP-12A-F4

Manual V1_3

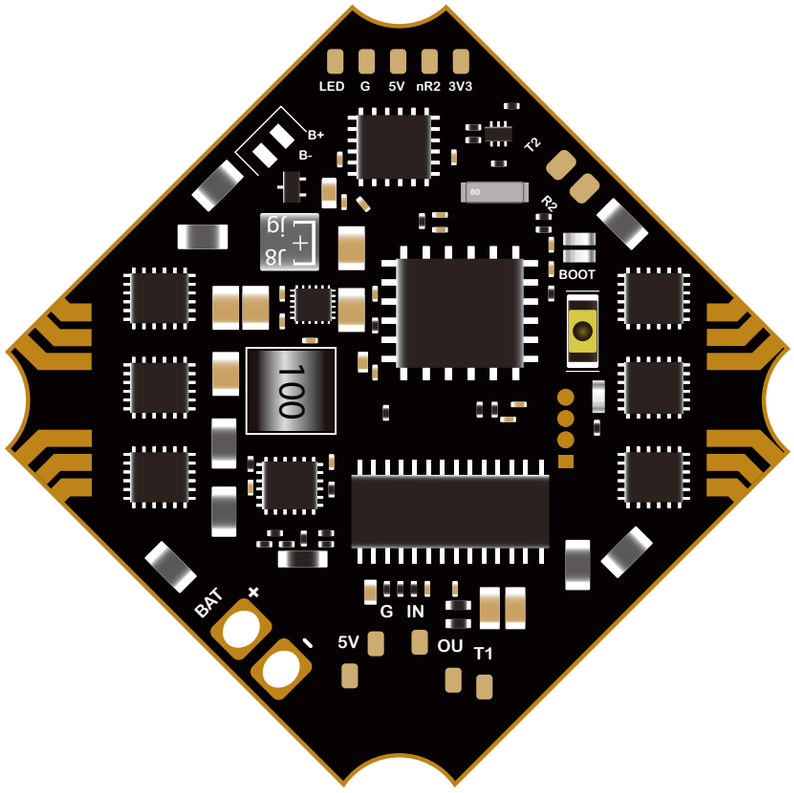

SPECS：

Model Name:GEP-12A-F4
MCU: STM32F411
IMU: MPU6000 gyro/accelerometer(SPI)
Firmware target:MATEKF411
OSD:BetaFlight OSD w/ AT7456E芯片
Baro:NO
OSD:YES
Beeper:YES
LED:YES
USB:micro USB
BEC output:5V@1A
Weight：5.6g

Intergrated LC Filter
ESC MCU: BB21F16G
Continuous current:12A
Input:2-4s,
Supports Dshot600 ,Oneshot,Multishot
Current meter: 210
Traget: G_H_30
Size:28.5x28.5mm板，25.5mm安装孔(M2)
Installing Hole:25.5×25.5mm, M2

Instruction Diagram

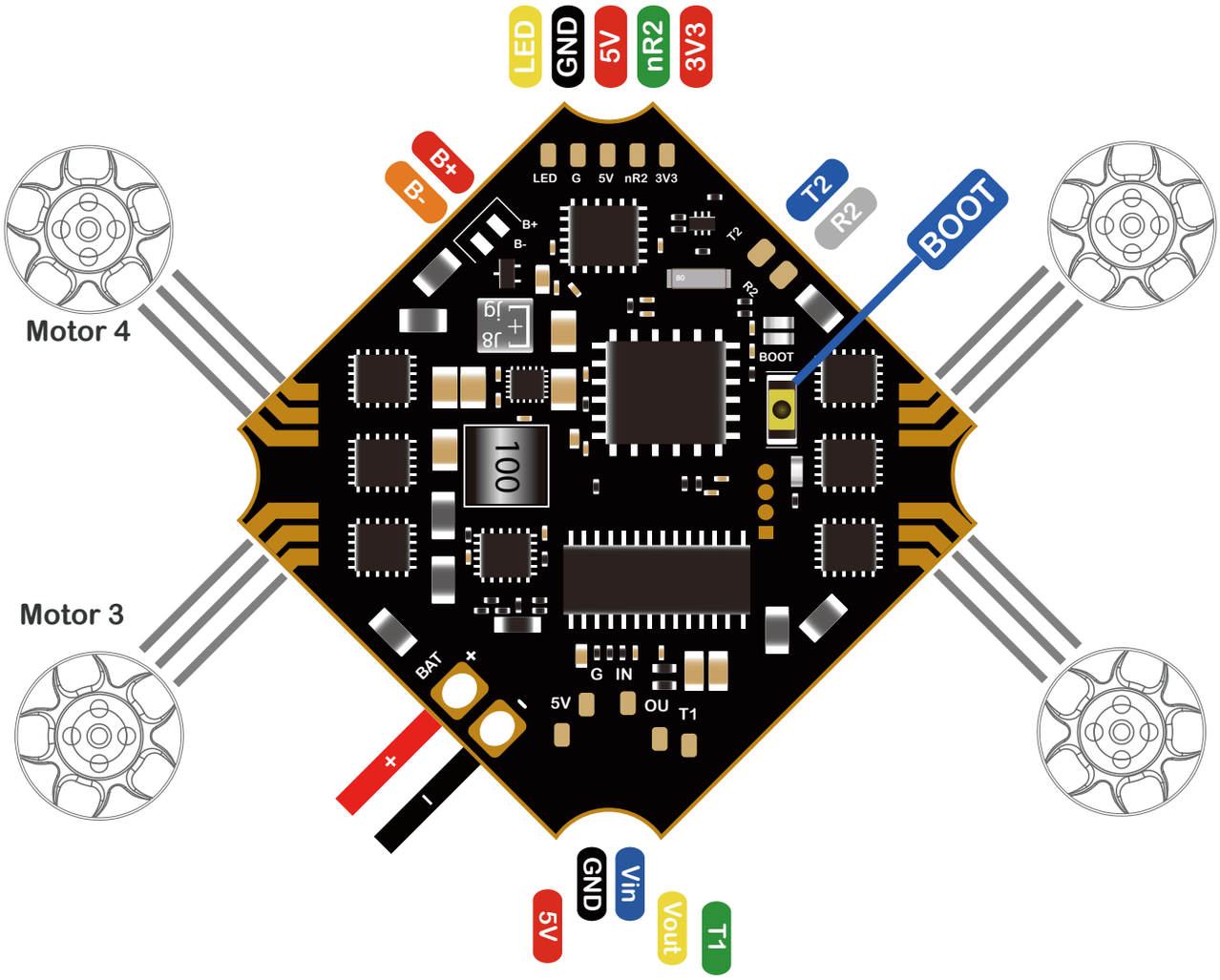

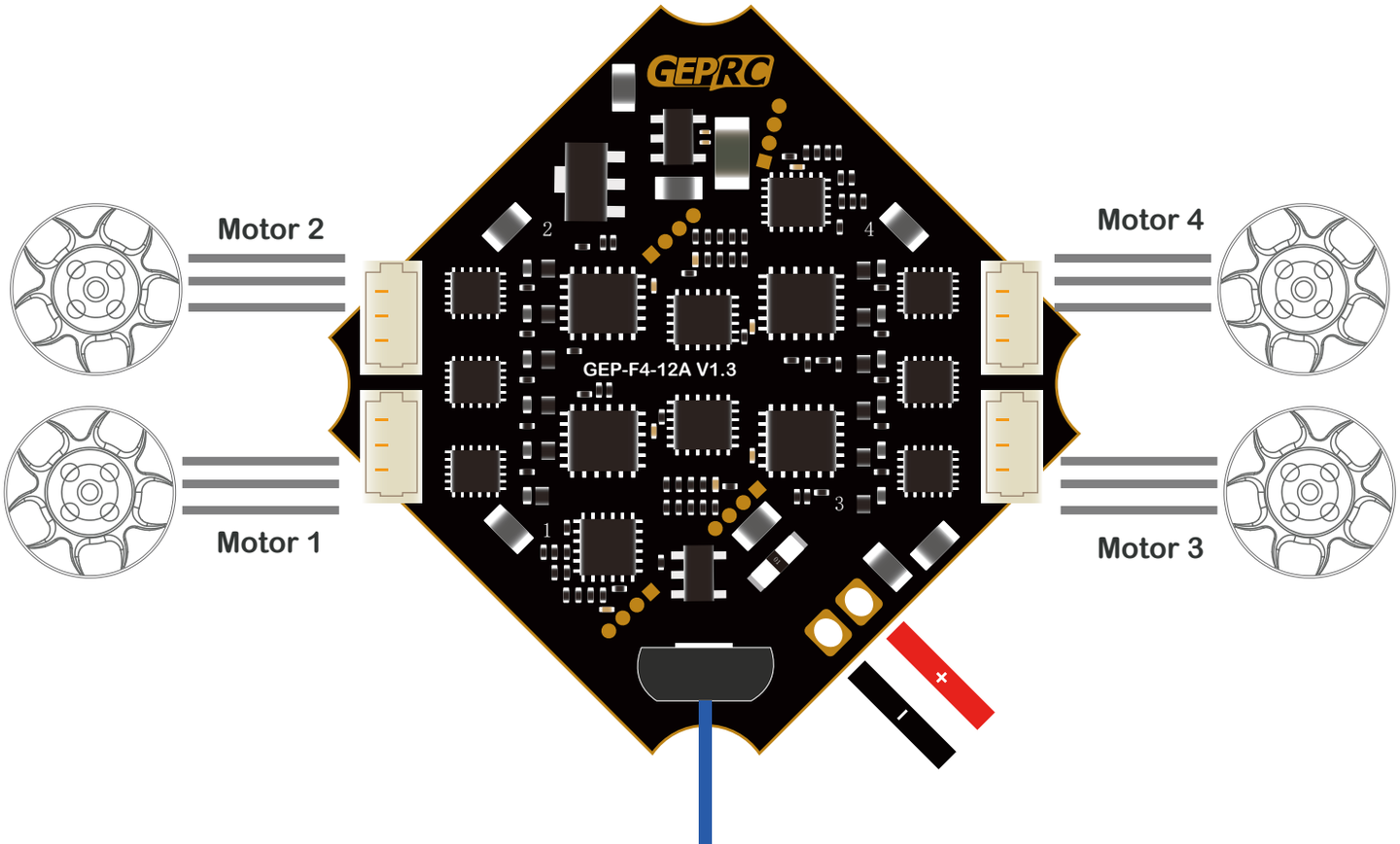

USB

DJI Digital FPV System

Ports

WIKI

Note: not all combinations are valid. When the flight controller firmware detects this the serial port configuration will be reset.
Note: Do **NOT** disable MSP on the first serial port unless you know what you are doing. You may have to reflash and erase your configuration if you do.

Identifier	Configuration/MSP	Serial Rx	Telemetry Output	Sensor Input	Peripherals
USB VCP	115200		Disabled AUTO	Disabled AUTO	Disabled AUTO
UART2	115200		Disabled AUTO	Disabled AUTO	Disabled AUTO
SOFTSERIAL1	115200		Disabled AUTO	Disabled AUTO	Disabled AUTO

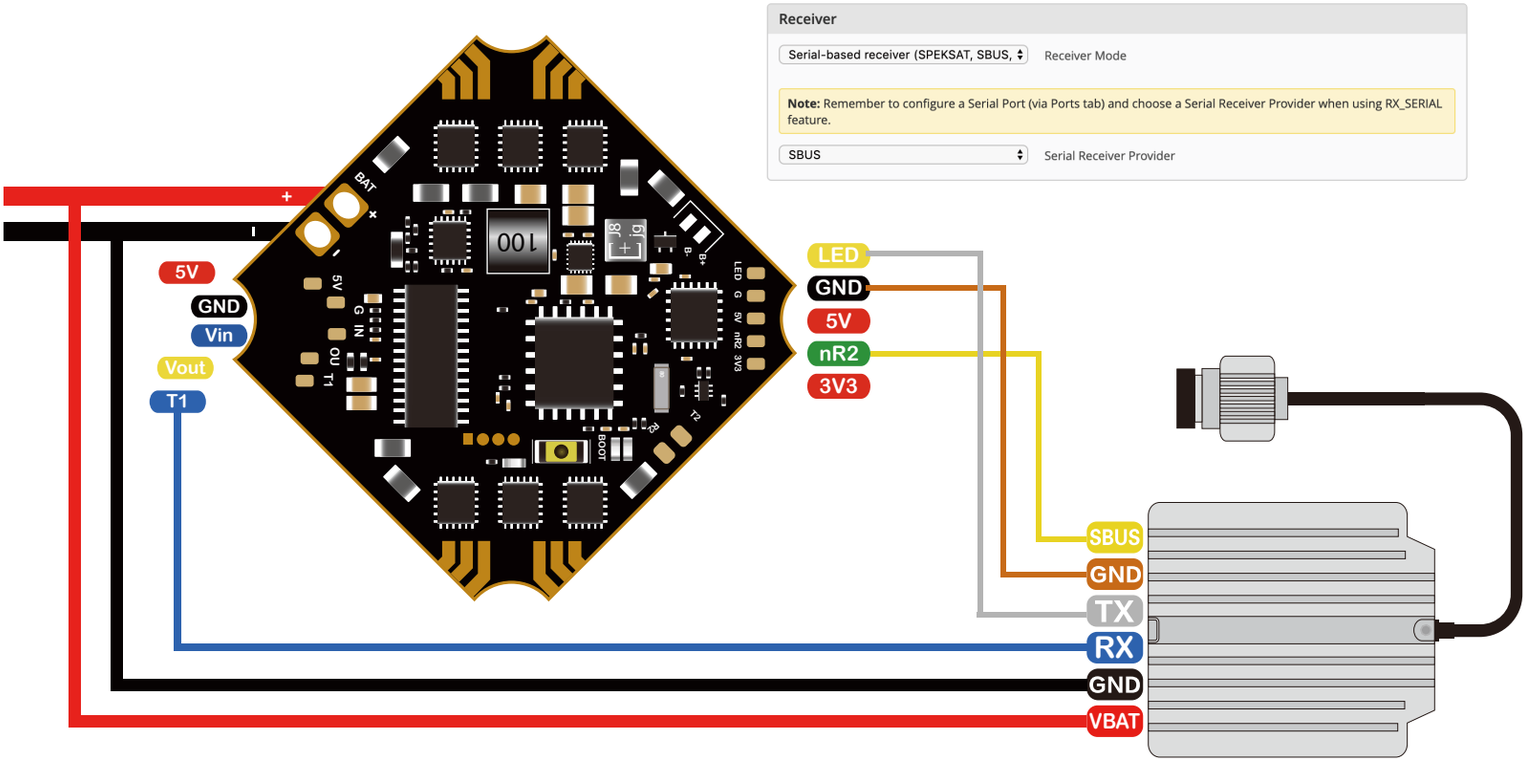

Soft serial port is needed for GEP-12A-F4 flight control connection to DJI Digital FPV System.First, we need to follow The surface wiring method is connected (the TX of the Digital FPV System is connected to the LED pin of the flight control), and then on the ground Enter the following code in the CLI interface of the station:

```
feature SOFTSERIAL
resource SERIAL_TX 1 none
resource SERIAL_RX 1 none
resource LED_STRIP  none
resource SERIAL_TX 11 A09
resource SERIAL_RX 11 A08
serial 1 64 115200 57600 0 115200
serial 30 1 115200 57600 0 115200
```

SAVE

Receiver

Ports

WIKI

Note: not all combinations are valid. When the flight controller firmware detects this the serial port configuration will be reset.
Note: Do **NOT** disable MSP on the first serial port unless you know what you are doing. You may have to reflash and erase your configuration if you do.

WARNING: The VTX table has not been set up correctly and without it VTX control will not be possible. Please set up the VTX table in Video Transmitter tab.

Identifier	Configuration/MSP	Serial Rx	Telemetry Output	Sensor Input	Peripherals
USB VCP	115200		Disabled AUTO	Disabled AUTO	Disabled AUTO
UART1	115200		Disabled AUTO	Disabled AUTO	VTX (IRC Tran AUTO
UART2	115200		Disabled AUTO	Disabled AUTO	Disabled AUTO

SBUS

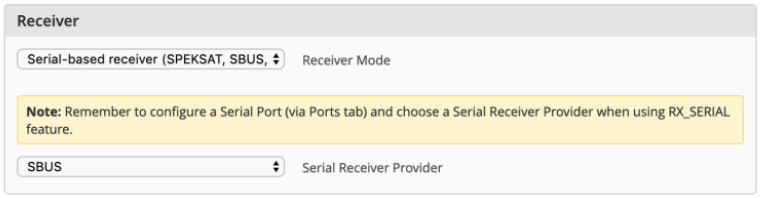

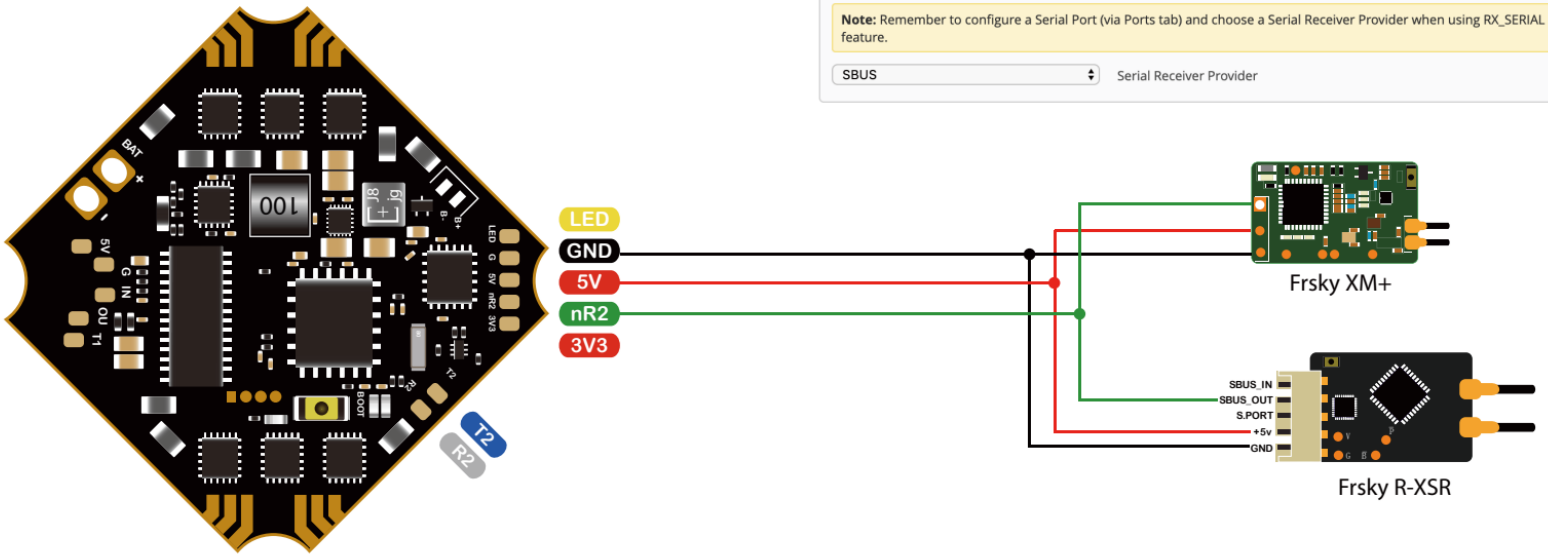

F.Port

CLI :

```
set serialrx_halfduplex = ON
save
```

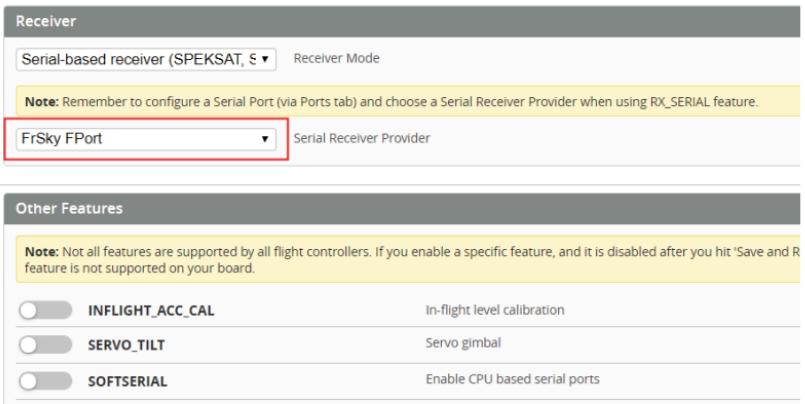

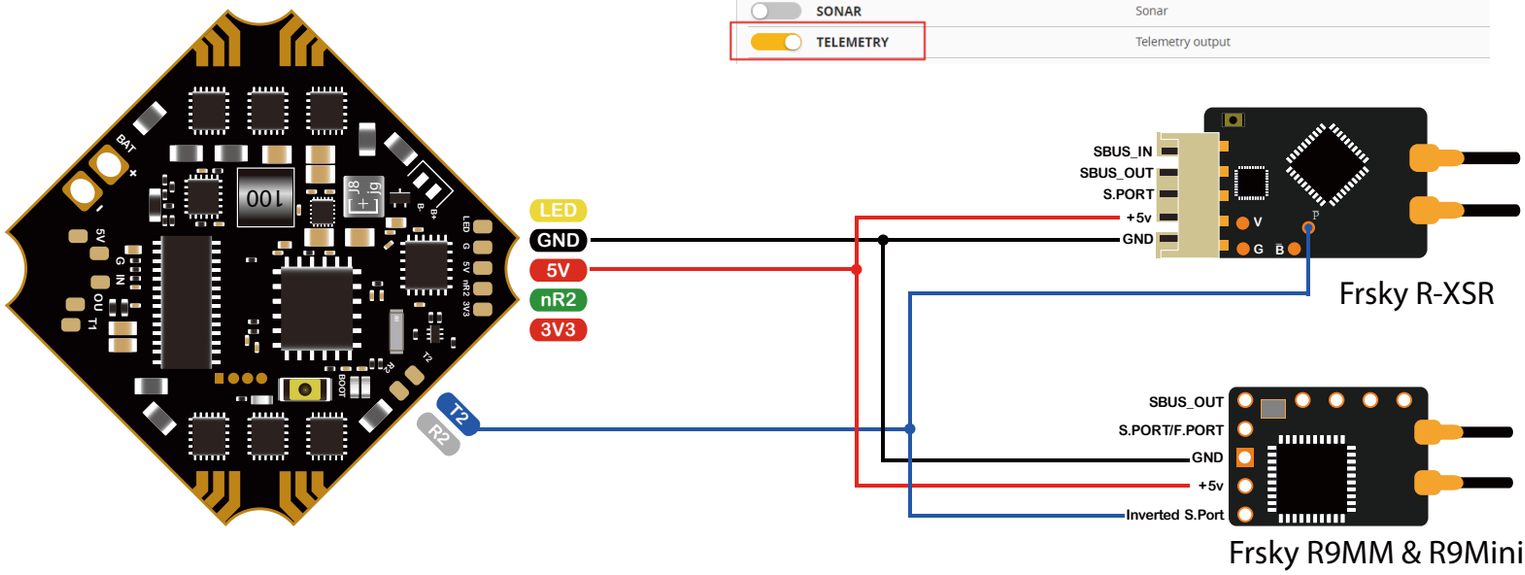

TBS Crossfire Nano RX

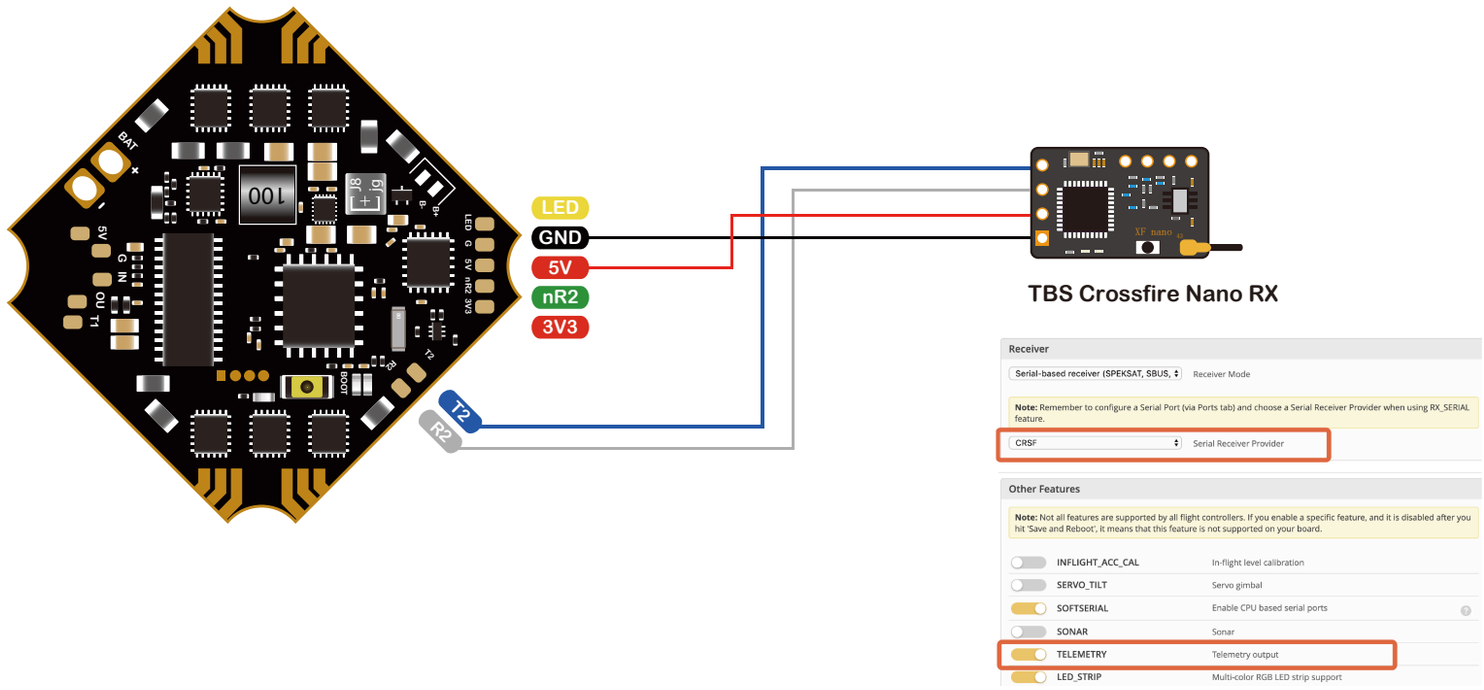

DSM/DSMX

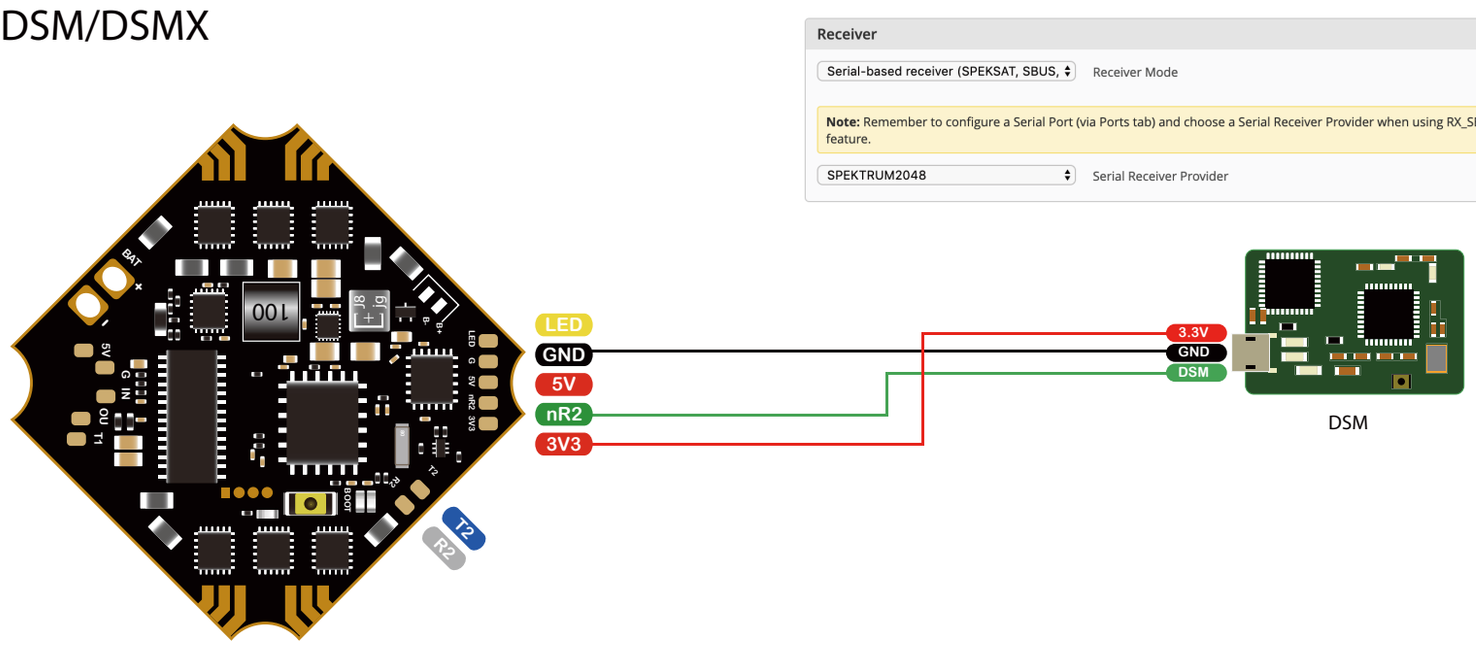

IBUS

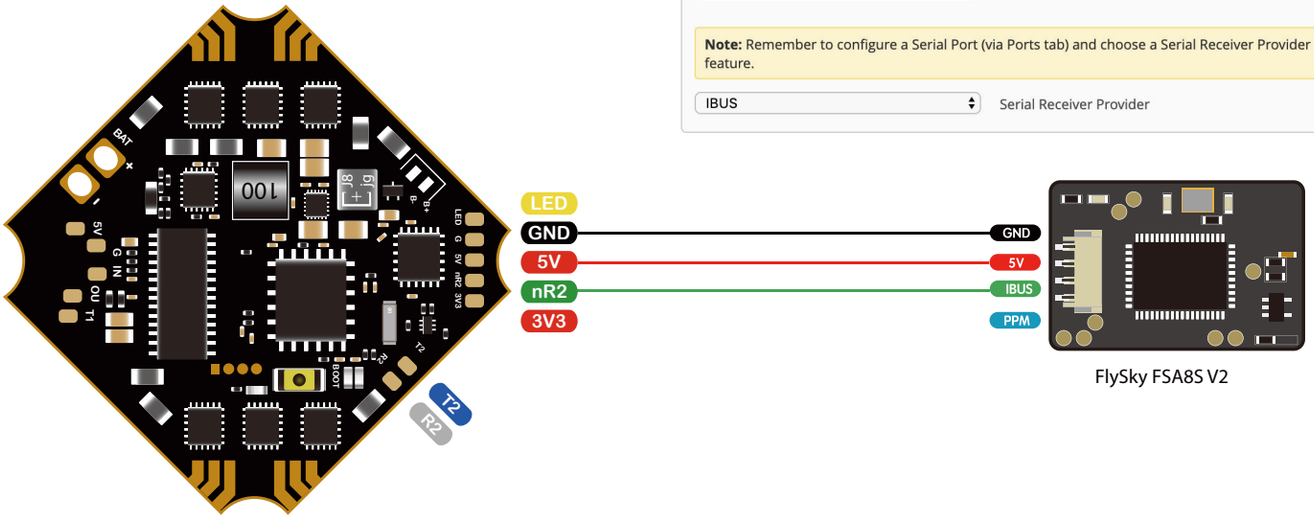

Receiver

Serial-based receiver (SPEKSAT, SBUS, ⇕ Receiver Mode

Note: Remember to configure a Serial Port (via Ports tab) and choose a Serial Receiver Provider when using RX_SERIAL feature.

IBUS ⇕ Serial Receiver Provider

ESC

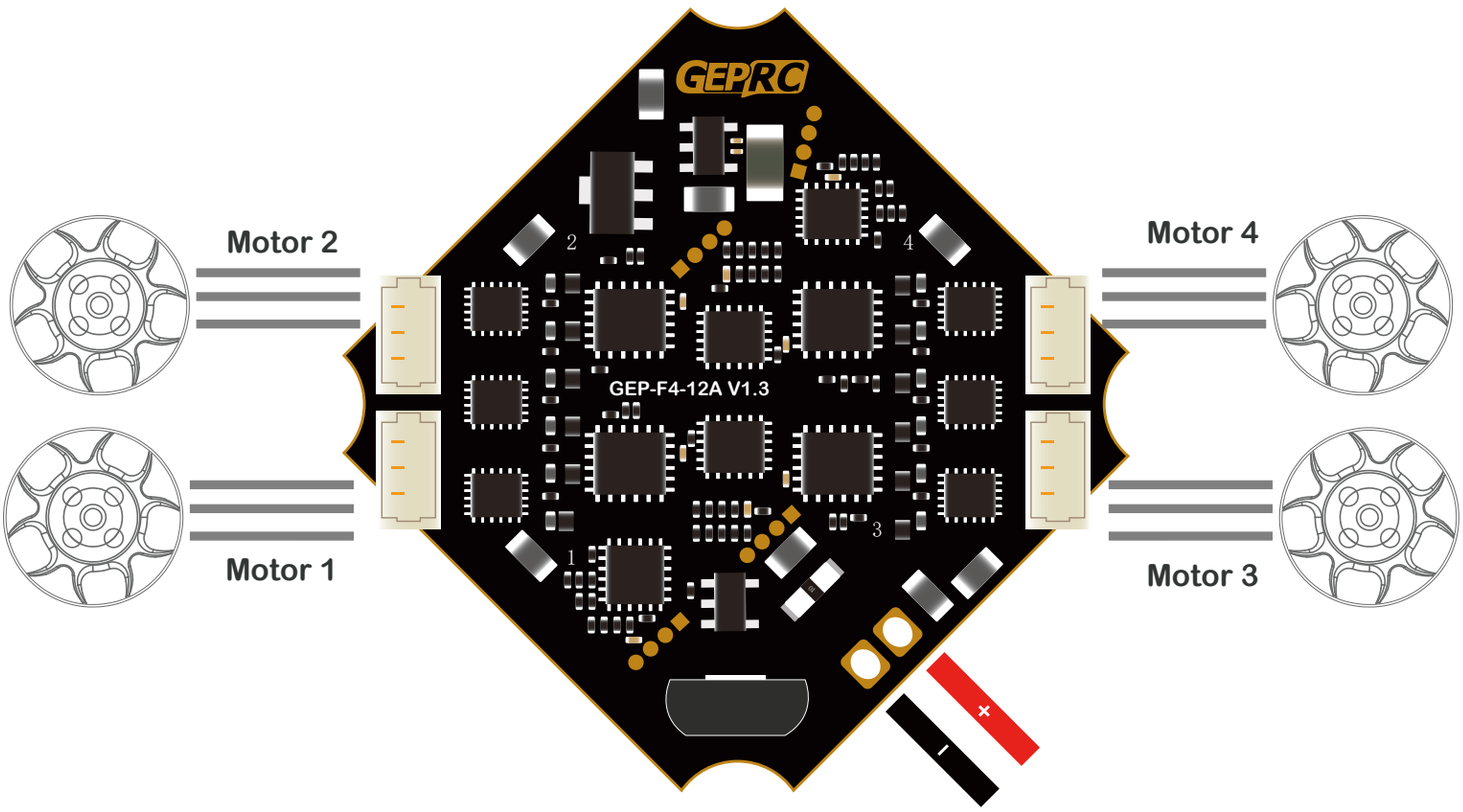

2-4S Lipo battery
BLHelis_S 12A 4in1 ESC(25.5*25.5 mm)

VTX

Ports WIKI

Note: not all combinations are valid. When the flight controller firmware detects this the serial port configuration will be reset.
Note: Do **NOT** disable MSP on the first serial port unless you know what you are doing. You may have to reflash and erase your configuration if you do.

WARNING: The VTX table has not been set up correctly and without it VTX control will not be possible. Please set up the VTX table in Video Transmitter tab.

Identifier	Configuration/MSP	Serial Rx	Telemetry Output	Sensor Input	Peripherals
USB VCP	115200		Disabled AUTO	Disabled AUTO	Disabled AUTO
UART1	115200		Disabled AUTO	Disabled AUTO	VTX (IRC Tran AUTO
UART2	115200		Disabled AUTO	Disabled AUTO	Disabled AUTO

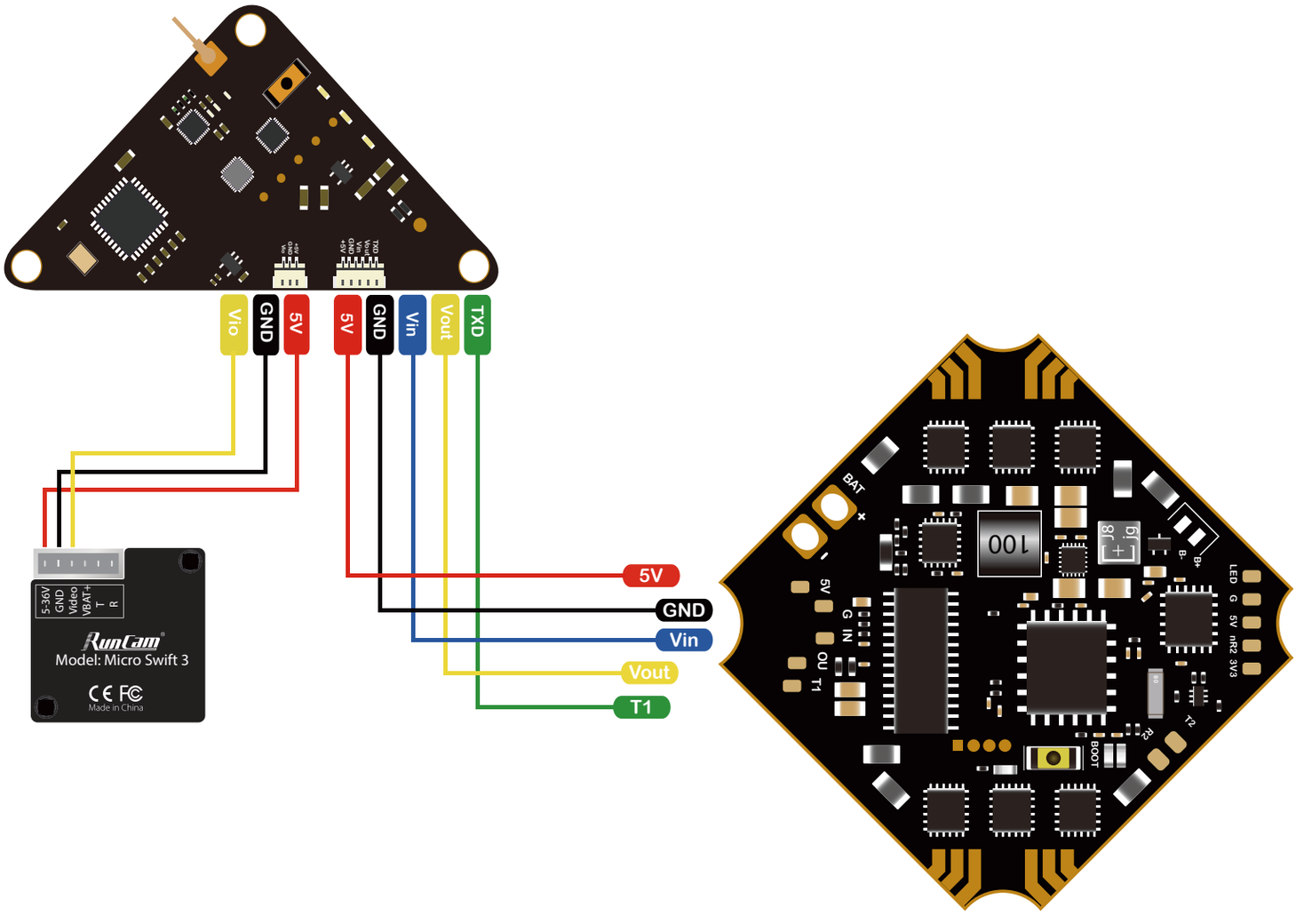

Camera

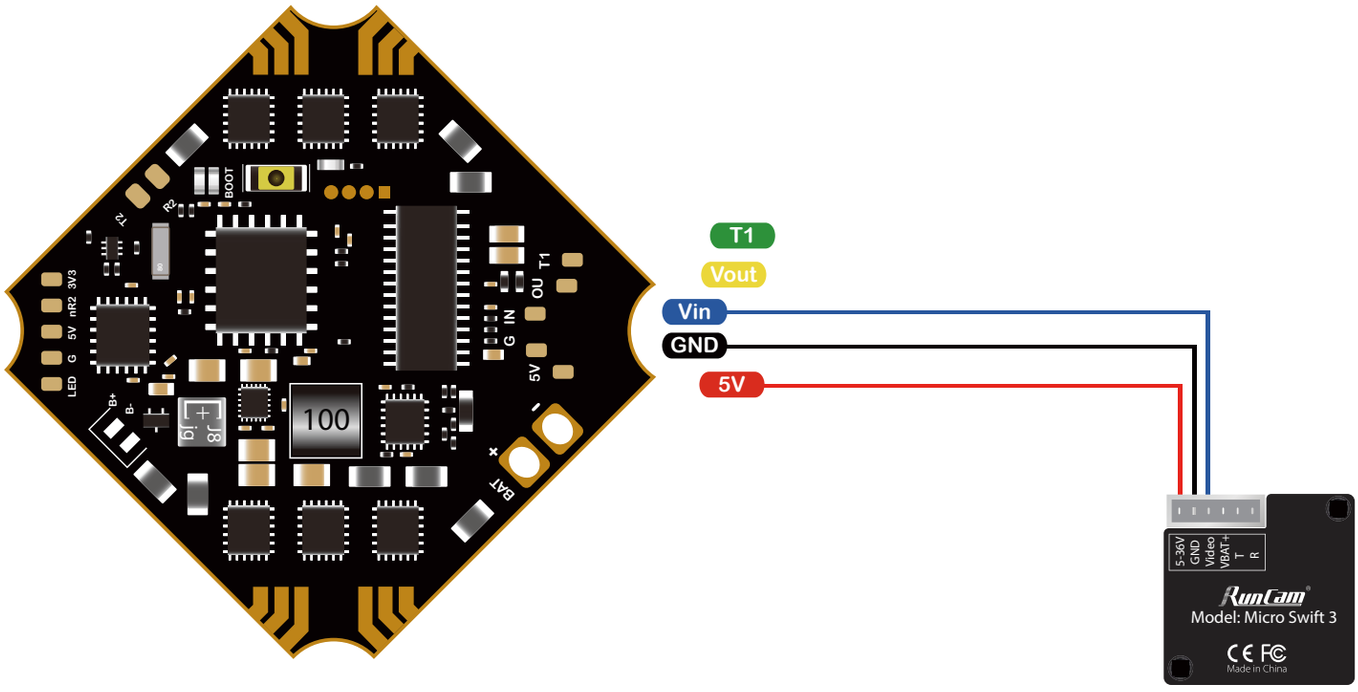

LED & Buzzer

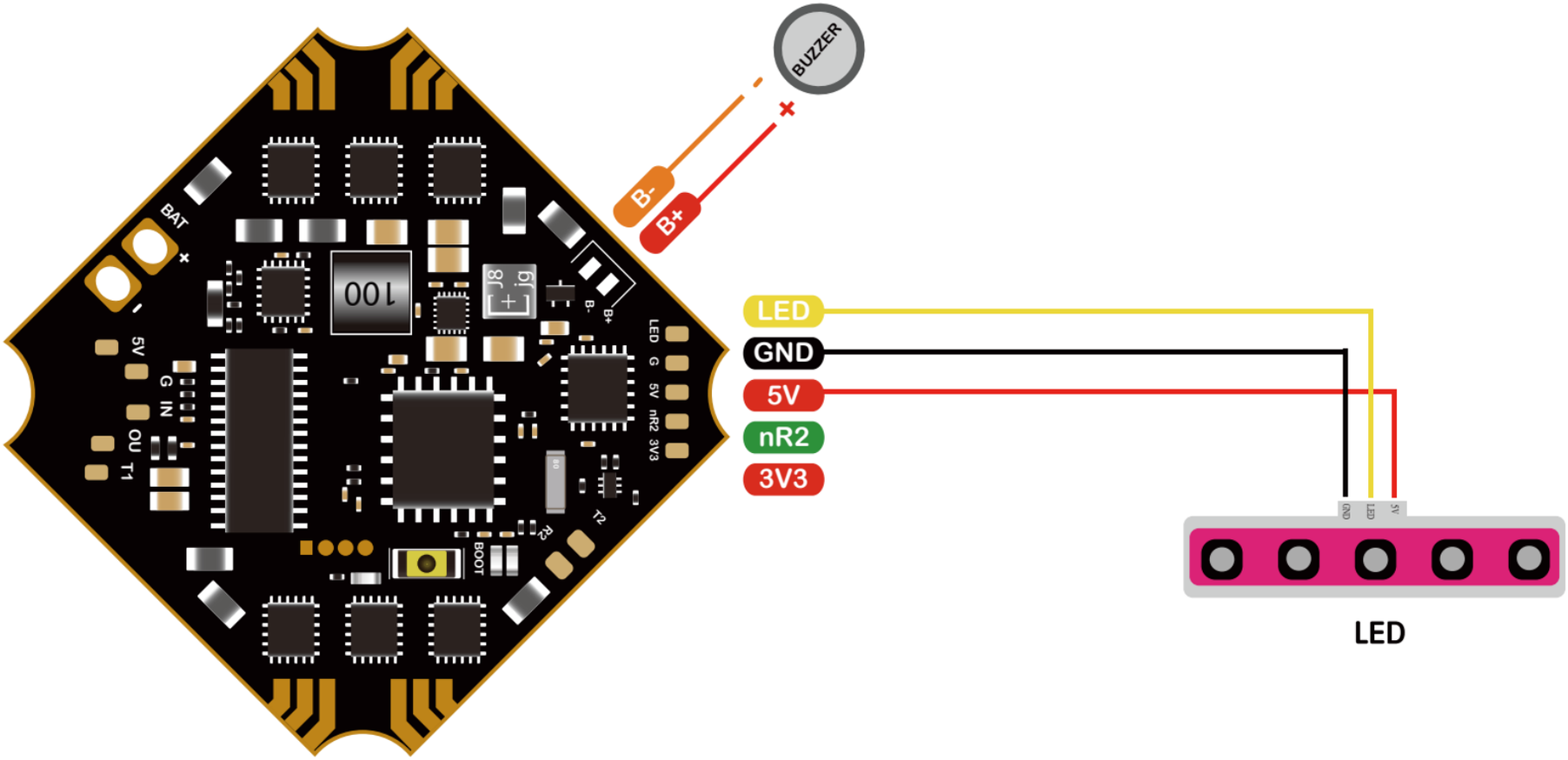

Official website
www.geprc.com

Manual
geprc.com/support

facebook
facebook.com/geprc

Instagram
instagram.com/geprc

GEPRC

www.geprc.com