PRO-FORM® PRO TC

proform.com

Model No. PFEX79920.0
Serial No. _____

Write the serial number in the space above for reference.

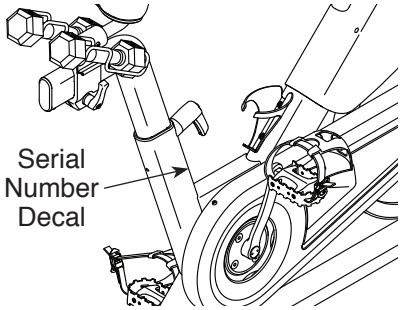

ACTIVATE YOUR WARRANTY

To register your product and activate your warranty today, go to my.proform.com.

CUSTOMER CARE

For service at any time, go to support.proform.com.

Or call 1-888-533-1333
Mon.–Fri. 6 a.m.–6 p.m. MT
Sat. 8 a.m.–12 p.m. MT

Please do not contact the store.

⚠ CAUTION

Read all precautions and instructions in this manual before using this equipment. Keep this manual for future reference.

USER'S MANUAL

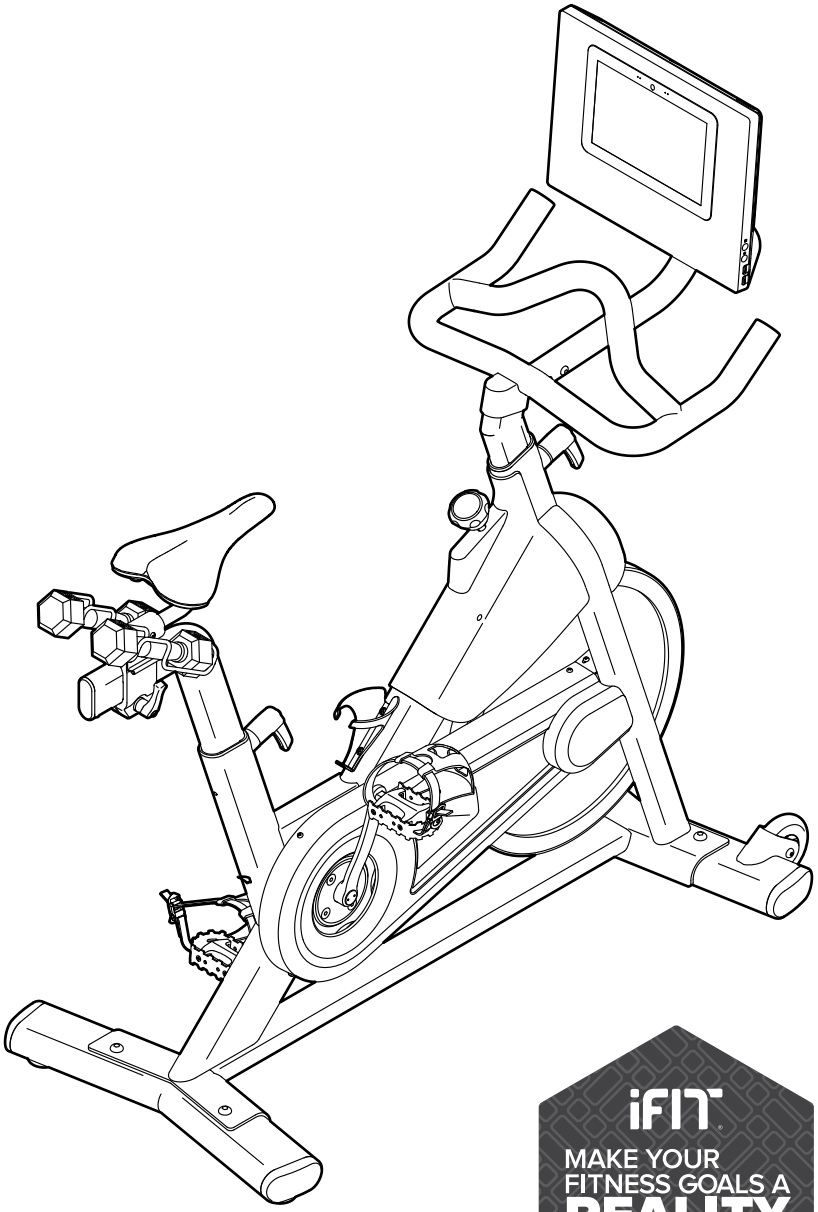

iFIT
MAKE YOUR FITNESS GOALS A REALITY
IFIT.COM

TABLE OF CONTENTS

WARNING DECAL PLACEMENT 2
IMPORTANT PRECAUTIONS 3
BEFORE YOU BEGIN 5
PART IDENTIFICATION CHART 6
ASSEMBLY 7
HOW TO USE THE EXERCISE BIKE 15
HOW TO USE THE CONSOLE 18
FCC INFORMATION 29
MAINTENANCE AND TROUBLESHOOTING 30
EXERCISE GUIDELINES 32
PART LIST 33
EXPLODED DRAWING 34
ORDERING REPLACEMENT PARTS . . . . . Back Cover
LIMITED WARRANTY . . . . . Back Cover

WARNING DECAL PLACEMENT

This drawing shows the location(s) of the warning decal(s). **If a decal is missing or illegible, see the front cover of this manual and request a free replacement decal. Apply the decal in the location shown.** Note: The decal(s) may not be shown at actual size.

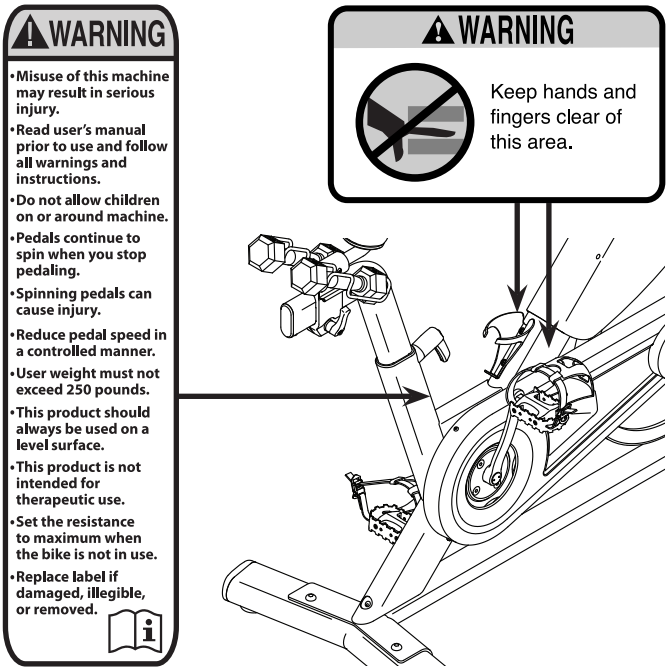

PROFORM and IFIT are registered trademarks of ICON Health & Fitness, Inc. The Bluetooth® word mark and logos are registered trademarks of Bluetooth SIG, Inc. and are used under license. Google Maps is a trademark of Google LLC. Wi-Fi is a registered trademark of Wi-Fi Alliance. WPA and WPA2 are trademarks of Wi-Fi Alliance.

IMPORTANT PRECAUTIONS

⚠ WARNING: To reduce the risk of serious injury, read all important precautions and instructions in this manual and all warnings on your exercise bike before using your exercise bike. ICON assumes no responsibility for personal injury or property damage sustained by or through the use of this product.

1. It is the responsibility of the owner to ensure that all users of the exercise bike are adequately informed of all precautions.
2. Before beginning any exercise program, consult your physician. This is especially important for persons over age 35 or persons with pre-existing health problems.
3. The exercise bike is not intended for use by persons with reduced physical, sensory, or mental capabilities or lack of experience and knowledge, unless they are given supervision or instruction about use of the exercise bike by someone responsible for their safety.
4. Use the exercise bike only as described in this manual.
5. The exercise bike is intended for home use only. Do not use the exercise bike in a commercial, rental, or institutional setting.
6. Keep the exercise bike indoors, away from moisture and dust. Do not put the exercise bike in a garage or covered patio, or near water.
7. Place the exercise bike on a level surface, with a mat beneath it to protect the floor or carpet. Make sure that there is at least 2 ft. (0.6 m) of clearance around the exercise bike.
8. Inspect and properly tighten all parts each time the exercise bike is used. Replace any worn parts immediately.
9. Keep children under age 16 and pets away from the exercise bike at all times.
10. Wear appropriate clothes while exercising; do not wear loose clothes that could become caught on the exercise bike. Always wear athletic shoes for foot protection.
11. The exercise bike should not be used by persons weighing more than 250 lbs. (114 kg).
12. Be careful when mounting and dismounting the exercise bike.
13. Always keep your back straight while using the exercise bike; do not arch your back.
14. The exercise bike does not have a freewheel; the pedals will continue to move until the flywheel stops. Reduce your pedaling speed in a controlled way.
15. To stop the flywheel quickly, press the brake knob downward.
16. To avoid damaging the brake pads, do not lubricate the brake pads.
17. Over exercising may result in serious injury or death. If you feel faint, if you become short of breath, or if you experience pain while exercising, stop immediately and cool down.

PROTECT

YOUR FITNESS EQUIPMENT WITH AN EXTENDED SERVICE PLAN

Your new fitness equipment is not an ordinary purchase; it is an investment in your health and well being for years to come.

As the leading provider of manufacturer's extended service plans, ICON strives to protect your equipment and your future.

Please review the following service plans and find one that best fits your needs.

PREVENTIVE MAINTENANCE SERVICE PLANS

Equipment Price	3-Year Plan	5-Year Plan
$0.00 to $1000.00	$199.99	$289.99
$1001.00 to $1500.00	$259.99	$379.99
$1501.00 to $2500.00	$339.99	$489.99
(Bikes/Systems Only) $0.00 to $2500.00	$139.99	NA

Features:

- Includes an annual preventive maintenance and performance check at your convenience
- Unlimited in-home repairs; no shipping required
- Covers parts and labor on all manufacturer's defects, as well as wear and tear on parts
- Up to 5 years of coverage available

STANDARD SERVICE PLANS

Equipment Price	1-Year Plan	2-Year Plan	3-Year Plan
$0.00 to $300.00	$29.99	$39.99	$59.99
$301.00 to $1000.00	$89.99	$119.99	$149.99
$1001.00 to $2000.00	$109.99	$139.99	$179.99
$2001.00 to $3000.00	$179.99	$209.99	$239.99

Features:

- Unlimited in-home repairs; no shipping required
- Covers parts and labor on all manufacturer's defects, as well as wear and tear on parts
- Up to 3 years of coverage available

To protect your fitness equipment today, please call Customer Care at 1-800-677-3838.
Or, visit us online at www.utserv.com.

UTS
UNIVERSAL TECHNICAL SERVICES

BEFORE YOU BEGIN

Thank you for choosing the new PROFORM® PRO TC exercise bike. Cycling is an effective exercise for increasing cardiovascular fitness, building endurance, and toning the body. The PRO TC exercise bike provides a selection of features designed to make your workouts at home more effective and enjoyable.

For your benefit, read this manual carefully before you use the exercise bike. If you have questions after reading this manual, please see the front cover of this manual. To help us assist you, note the product model number and serial number before contacting us. The model number and the location of the serial number decal are shown on the front cover of this manual.

Before reading further, please familiarize yourself with the parts that are labeled in the drawing below.

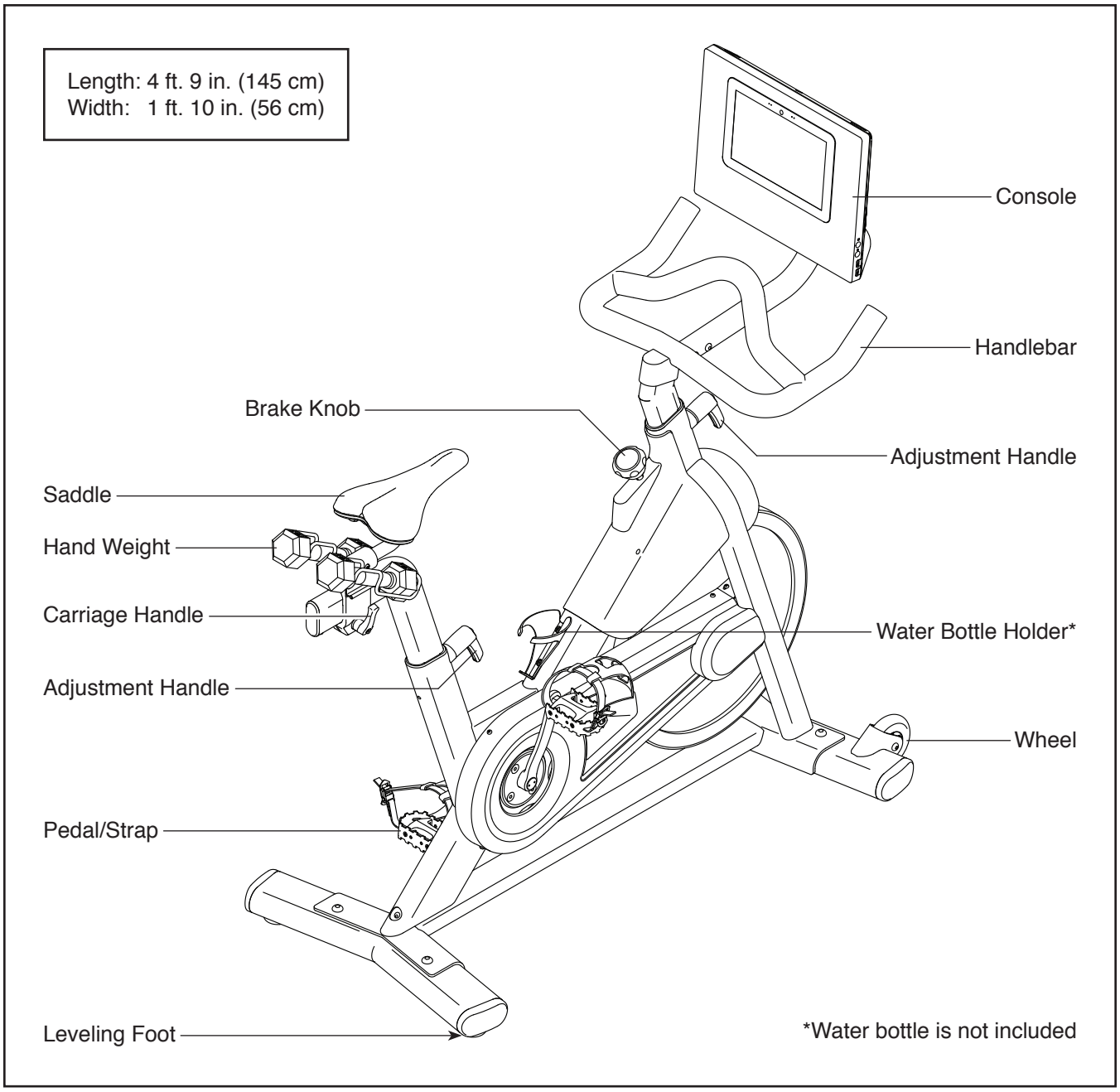

PART IDENTIFICATION CHART

Use the drawings below to identify the small parts needed for assembly. The number in parentheses below each drawing is the key number of the part, from the PART LIST near the end of this manual. The number following the key number is the quantity needed for assembly. **Note: If a part is not in the hardware kit, check to see if it has been preassembled. Extra parts may be included.**

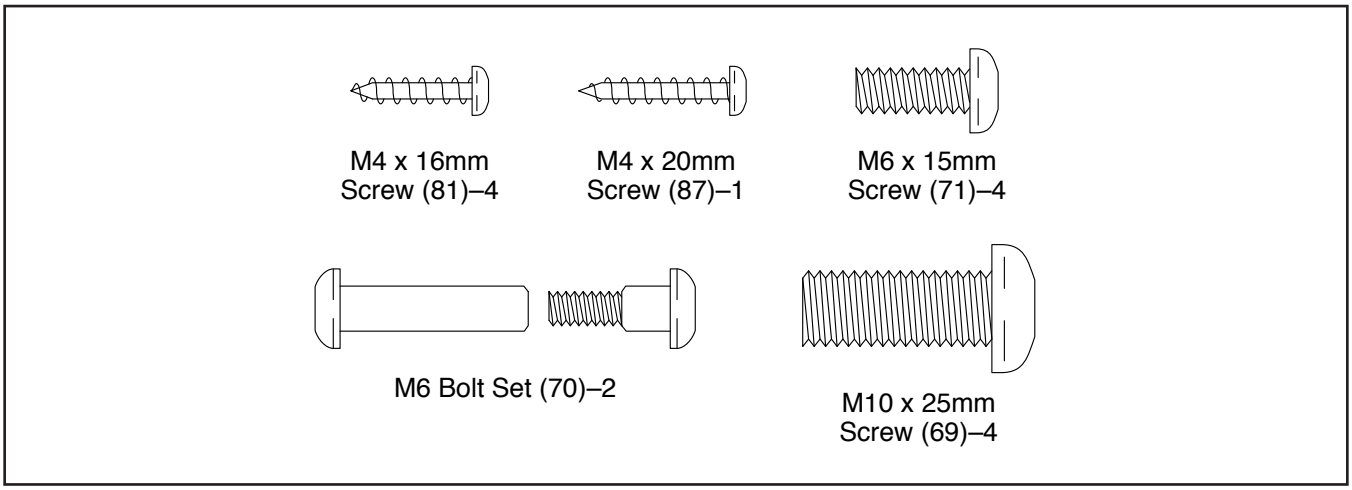

ASSEMBLY

- To hire an authorized service technician to assemble this product, call 1-800-445-2480.
- Assembly requires two persons.
- Place all parts in a cleared area and remove the packing materials. Do not dispose of the packing materials until you finish all assembly steps.
- Left parts are marked “L” or “Left” and right parts are marked “R” or “Right.”
- In addition to the included tool(s), assembly requires the following tool(s):

one Phillips screwdriver 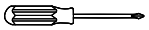

one adjustable wrench

one rubber mallet

one pair of scissors 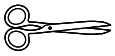

Assembly may be easier if you have a set of wrenches. To avoid damaging parts, do not use power tools.

1. **Go to my.proform.com on your computer and register your product.**
   - documents your ownership
   - activates your warranty
   - ensures priority customer support if assistance is ever needed

   Note: If you do not have internet access, call Customer Care (see the front cover of this manual) and register your product.

1

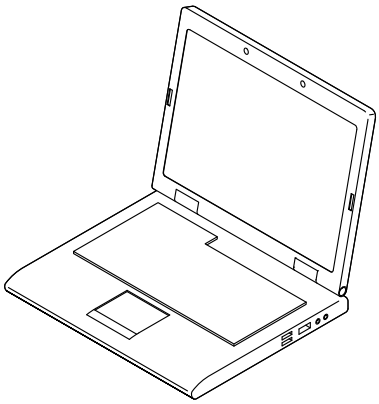

2. If there are shipping tubes (not shown) attached to the front and rear of the Frame (1), remove and discard the shipping tubes and the hardware attaching them.

   Orient the Front Stabilizer (2) as shown, and attach it to the Frame (1) with two M10 x 25mm Screws (69).

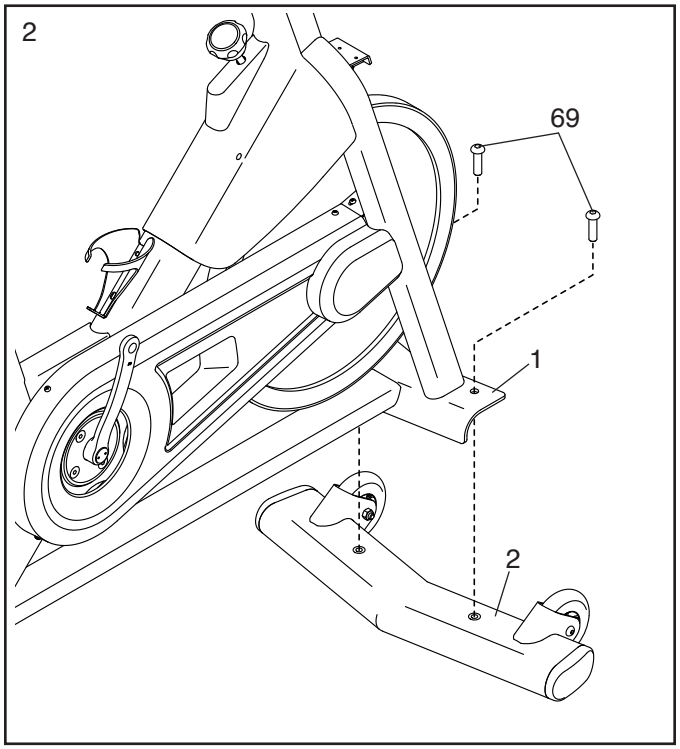

3. Attach the Rear Stabilizer (3) to the Frame (1) with two M10 x 25mm Screws (69).

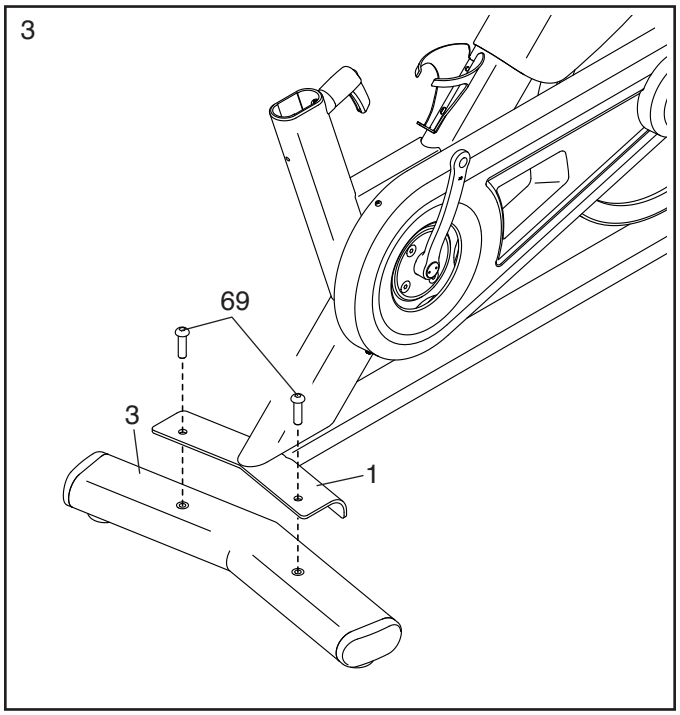

4. **Tip: See the inset drawing to learn how to operate the Adjustment Handle (14).**

   Locate the Adjustment Handle (14) on the rear of the Frame (1). Pull the Adjustment Handle outward, and insert the Saddle Post (7) into the Frame.

   Next, move the Saddle Post (7) upward or downward to the desired position, release the Adjustment Handle (14) into an adjustment hole in the Saddle Post, and then **tighten the Adjustment Handle four turns. Make sure that the Adjustment Handle is firmly engaged in an adjustment hole.**

   Then, pull the Adjustment Handle (14) outward, turn it so that it points downward as shown, and then release it.

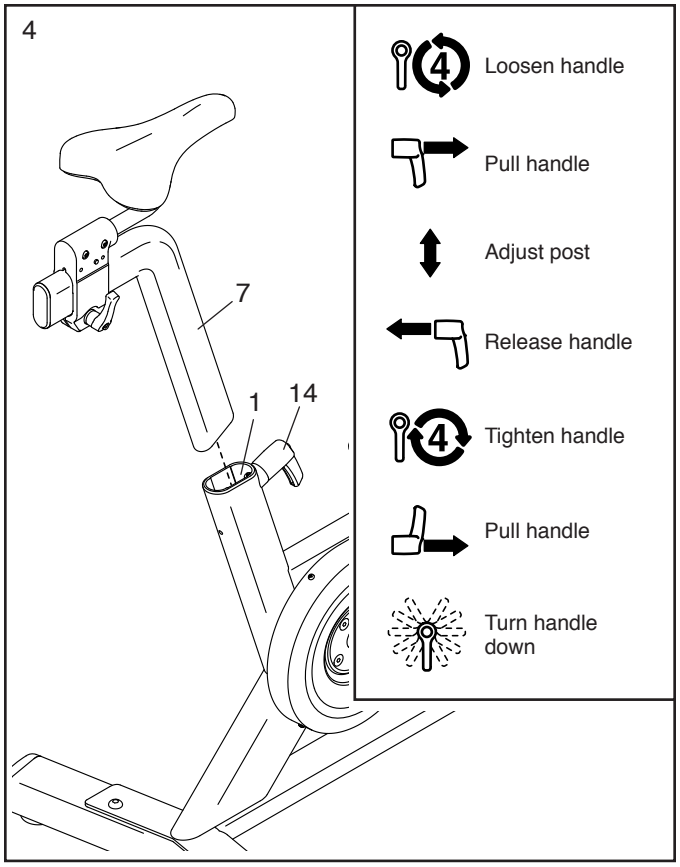

5. Orient the Left and Right Weight Rests (11, 12) as shown.

   Attach each Weight Rest (11, 12) to the Saddle Carriage (10) with two M6 x 15mm Screws (71).

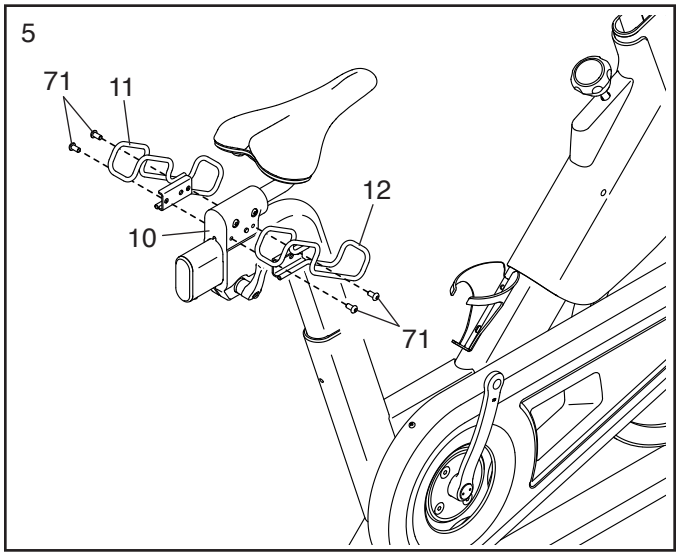

6. **Note: You can attach your own pedals if desired.**

   Identify the Right Pedal (16). Using the included wrench, **firmly tighten** the Right Pedal **clockwise** into the Right Crank Arm (18).

   Firmly tighten the Left Pedal (17) counterclockwise into the Left Crank Arm (not shown). IMPORTANT: You must turn the Left Pedal counterclockwise to attach it.

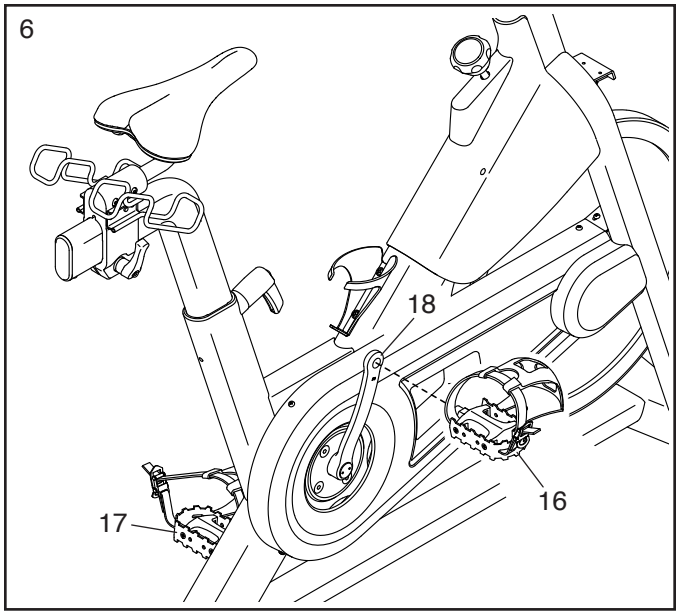

7. Have a second person hold the Handlebar (4) near the Frame (1).

   Next, locate the wire tie (A) in the Frame (1). Tie the wire tie to the Handlebar Wire (90) in the Handlebar (4). Then, pull the lower end of the wire tie until the Handlebar Wire is routed through the Frame. Untie and discard the wire tie.

   Tip: See the upper inset drawing to learn how to operate the Adjustment Handle (14).

   Next, locate the Adjustment Handle (14) on the front of the Frame (1). Pull the Adjustment Handle outward, and insert the Handlebar (4) into the Frame.

   Next, move the Handlebar (4) downward and release the Adjustment Handle (14) into the indicated adjustment hole (B). Then, **tighten the Adjustment Handle four turns. Make sure that the Adjustment Handle is firmly engaged in the adjustment hole.**

   Then, pull the Adjustment Handle (14) outward, turn it so that it points downward as shown, and then release it.

   See the lower inset drawing. Insert the Handlebar Wire (90) through the zip tie (C) on the Frame (1); **do not connect the Handlebar Wire and do not tighten the zip tie yet.**

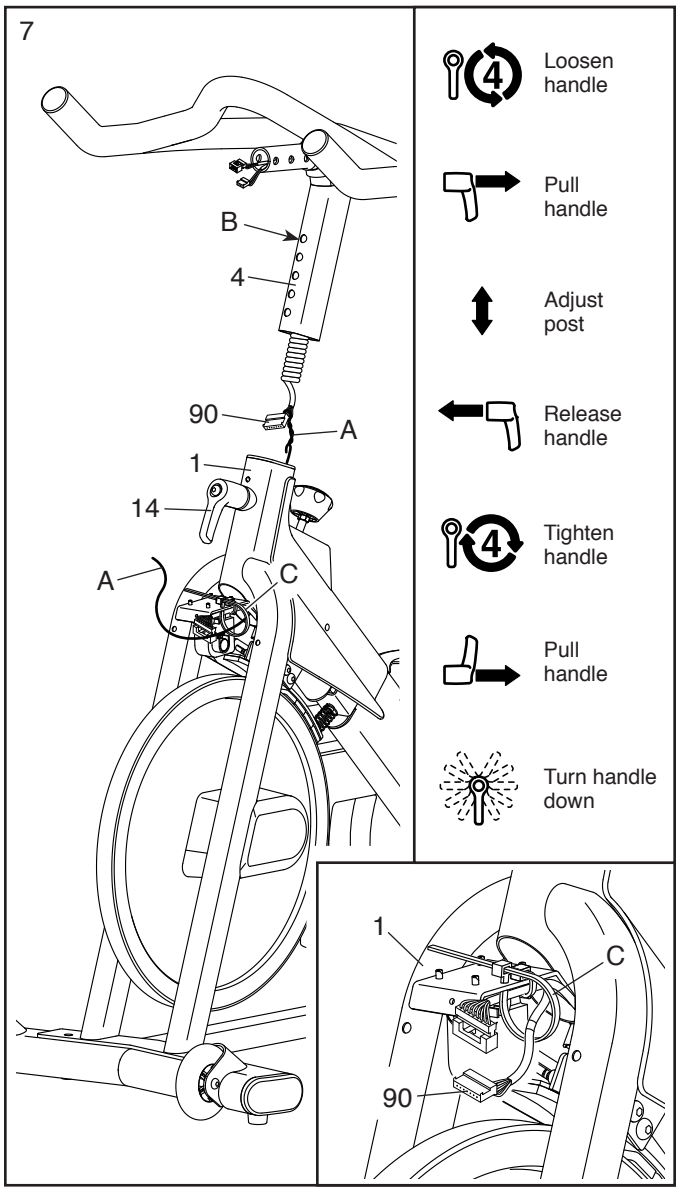

8. **See the inset drawing.** Connect the connector on the Handlebar Wire (90) to the connector on the Frame Wire (82).

   Next, tighten the zip tie (C) around the indicated mark (D) on the Handlebar Wire (90). Then, cut off the excess zip tie.

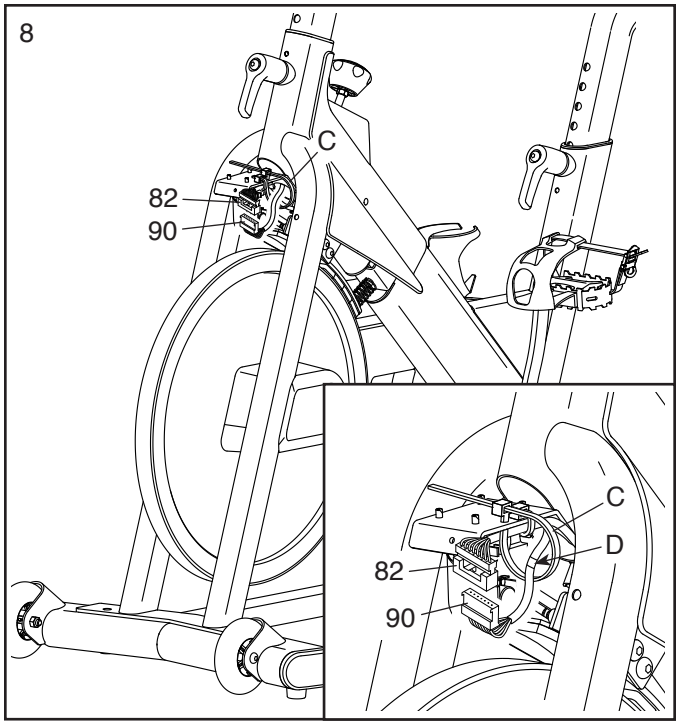

9. **Tip: Avoid pinching the wires.** Press the Motor Cover (38) onto the Frame (1), and then attach it with an M4 x 20mm Screw (87).

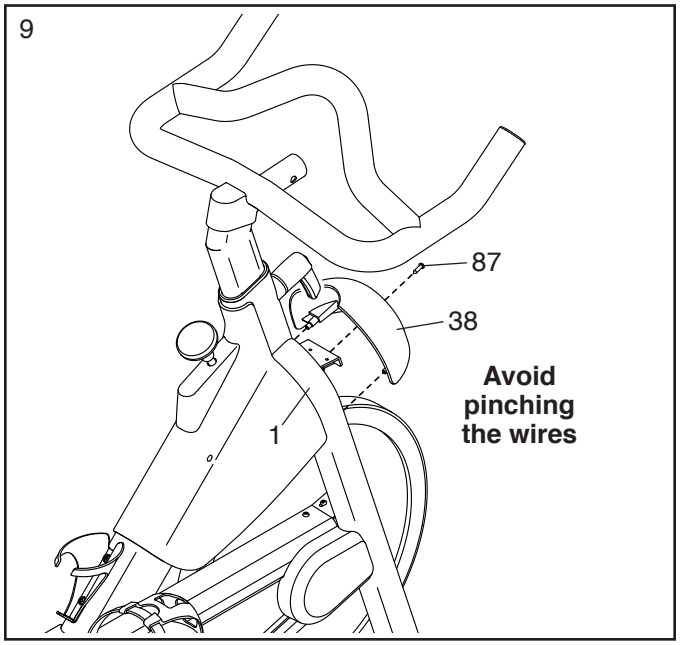

10. While a second person holds the Console Mount (5) near the Handlebar (4), connect the Mount Wire (91) in the Console Mount to the Handlebar Wire (90) in the Handlebar.

Tip: Avoid pinching the wires. Gently pull on the wire tie (E) as you slide the Console Mount (5) onto the Handlebar (4). **Make sure that the wires inside the Handlebar are out of the way of the bolt holes.**

You can attach the Console Mount (5) in either the standard position or the extended position. For the standard position, align the Console Mount with the inner holes (F, G). For the extended position, align the Console Mount with the outer holes (G, H).

Tip: Avoid pinching the wires. Attach the Console Mount (5) with two M6 Bolt Sets (70).

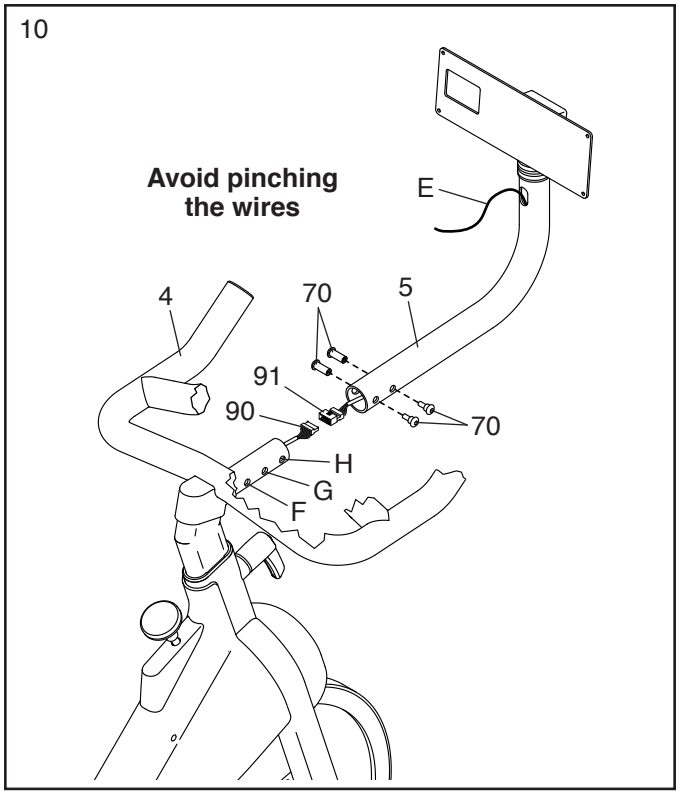

11. While a second person holds the Console (6) near the Console Mount (5), press the Wire Protector (98) around the Console Wire (I) in the location shown.

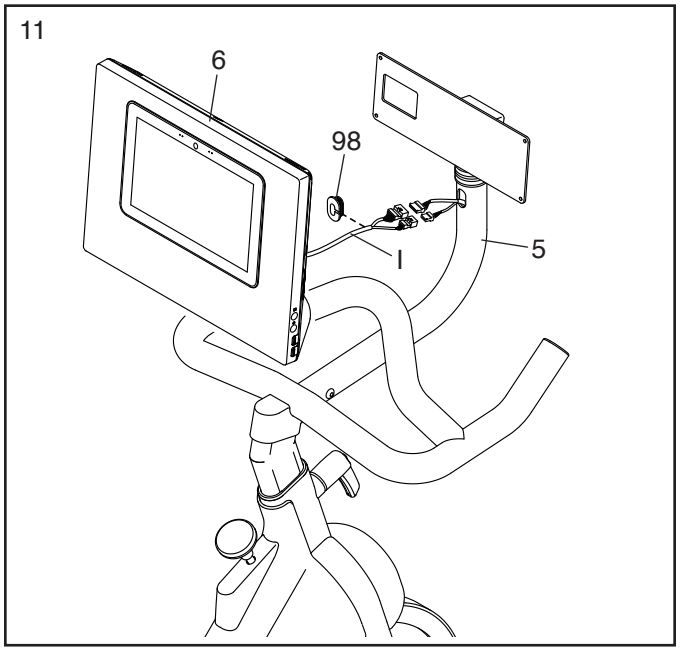

12. Connect the connectors on the Console Wire (I) to the connectors on the Mount Wire (91). Next, insert the connectors into the Console Mount (5), and then press the Wire Protector (98) into the Console Mount. **Tip: It may be helpful to insert the connectors into the Console Mount one at a time.**

    Tip: Avoid pinching the wires. If necessary, tilt the Console Bracket (26) upward to make this step easier. Attach the Console (6) to the Console Bracket with four M4 x 16mm Screws (81); **start all the Screws, and then tighten them.**

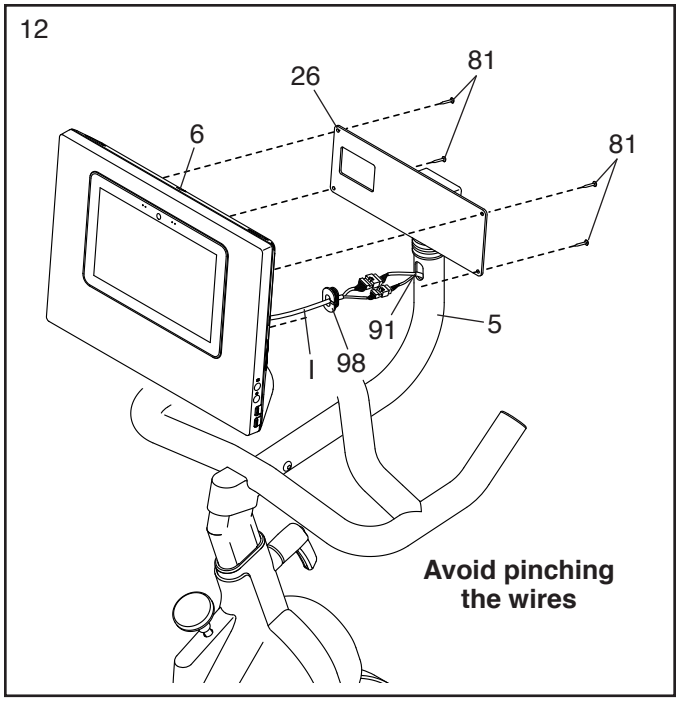

13. Set the Hand Weights (59) in the Weight Rests (11, 12).

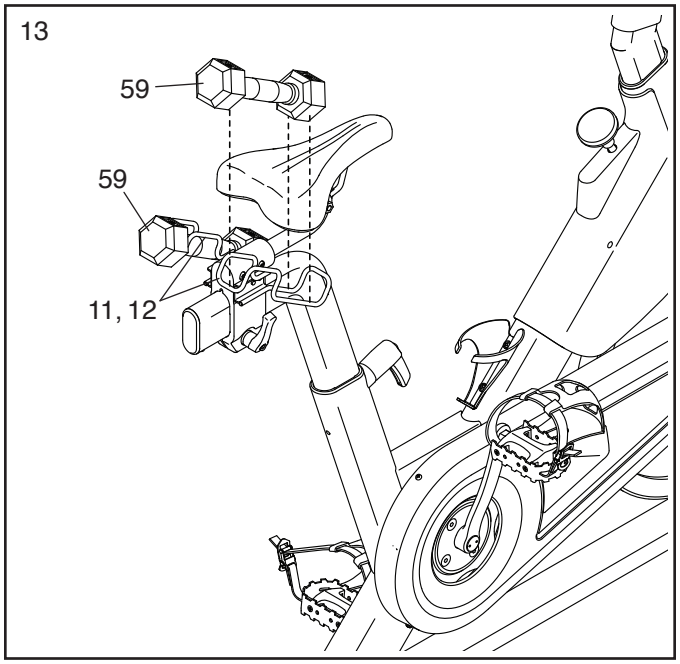

14. Plug the Power Adapter (86) into the receptacle in the Frame (1).

    Note: To plug the Power Adapter (86) into an outlet, see HOW TO PLUG IN THE POWER ADAPTER on page 15.

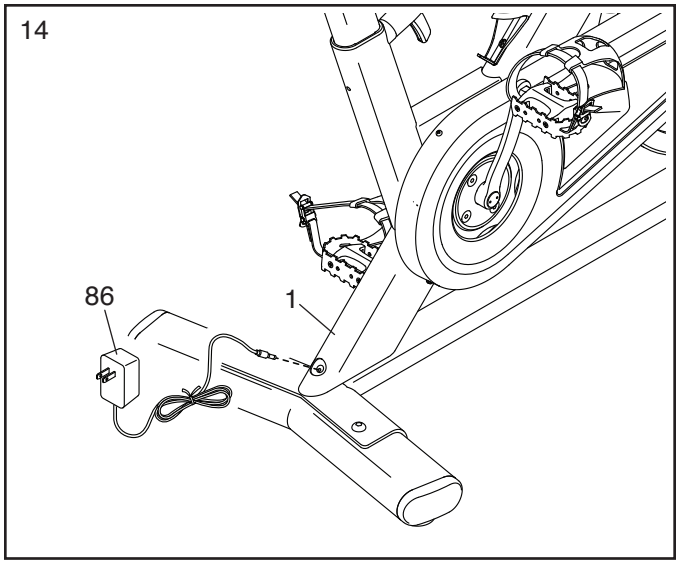

15. **After the exercise bike is assembled, inspect it to make sure that it is assembled correctly, that it functions properly, and that all parts are properly tightened.** Extra parts may be included. Place a mat under the exercise bike to protect the floor or carpet.

HOW TO USE THE EXERCISE BIKE

HOW TO PLUG IN THE POWER ADAPTER

IMPORTANT: If the exercise bike has been exposed to cold temperatures, allow it to warm to room temperature before you plug in the power adapter (A). If you do not do this, you may damage the console displays or other electronic components.

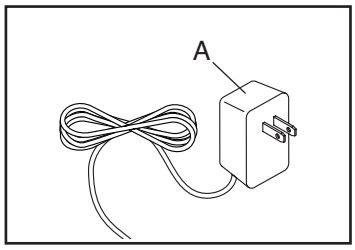

Plug the power adapter (A) into the receptacle on the frame of the exercise bike. Then, plug the power adapter into an appropriate outlet that is properly installed in accordance with all local codes and ordinances.

HOW TO LEVEL THE EXERCISE BIKE

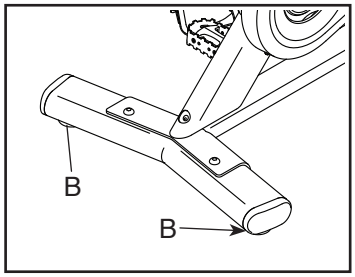

If the exercise bike rocks slightly on your floor during use, turn one or both of the leveling feet (B) beneath the rear stabilizer until the rocking motion is eliminated.

HOW TO ADJUST THE ANGLE OF THE SADDLE

You can adjust the angle of the saddle to the position that is most comfortable. You can also slide the saddle forward or backward to increase your comfort or to adjust the distance to the handlebar.

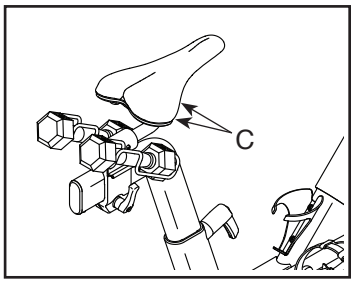

To adjust the saddle, loosen the nuts (C) on the saddle clamp a few turns, and then tilt the saddle upward or downward or slide the saddle forward or backward to the desired position. Then, retighten the nuts.

HOW TO ADJUST THE HORIZONTAL POSITION OF THE SADDLE

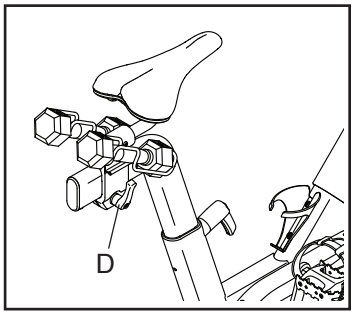

To adjust the position of the saddle, first loosen the carriage handle (D) and pull it outward. Then, move the saddle forward or backward, release the carriage handle, and then firmly tighten the carriage handle.

Note: The carriage handle (D) functions like a ratchet. Turn the carriage handle in the desired direction, pull it outward, turn it in the opposite direction, push it inward, and then turn it in the desired direction again. Repeat this process as many times as necessary.

HOW TO ADJUST THE SADDLE POST

For effective exercise, the saddle should be at the proper height. As you pedal, there should be a slight bend in your knees when the pedals are in the lowest position.

IMPORTANT: To prevent the hand weights from falling out of the weight rests, hold the saddle post firmly with one hand at all times while making this adjustment.

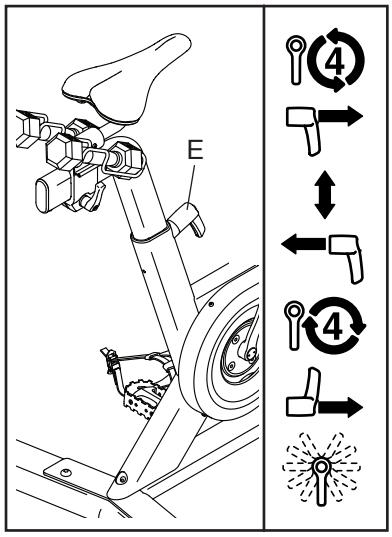

To adjust the height of the saddle post, first loosen the adjustment handle (E) four turns and pull it outward. Next, move the saddle post upward or downward, release the adjustment handle into an adjustment hole in the saddle post, and **firmly tighten the adjustment handle four turns.**
Make sure that the adjustment handle is engaged in an adjustment hole. Then, pull the adjustment handle outward, turn it so that it points downward as shown, and then release it.

HOW TO ADJUST THE HANDLEBAR

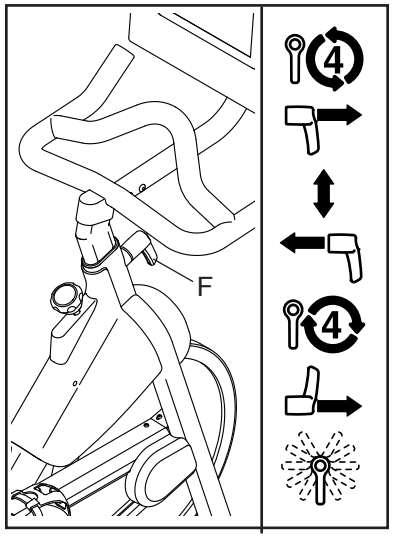

To adjust the height of the handlebar, first loosen the adjustment handle (F) four turns and pull it outward. Then, move the handlebar upward or downward, release the adjustment handle into an adjustment hole in the handlebar, and **firmly tighten the adjustment handle four turns.**
Make sure that the adjustment handle is engaged in an adjustment hole. Then, pull the adjustment handle outward, turn it so that it points downward as shown, and then release it.

To adjust the horizontal position of the handlebar, see assembly step 10 on page 12.

HOW TO USE THE PEDALS

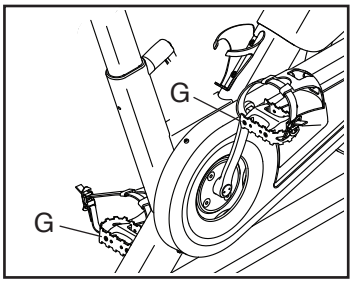

To use the pedals (G), insert your shoes into the toe cages and pull the ends of the toe straps. To adjust the toe straps, press and hold the tabs on the buckles, adjust the toe straps to the desired position, and then release the tabs.

Note: You can attach your own pedals to the exercise bike if desired.

HOW TO USE THE BRAKE KNOB

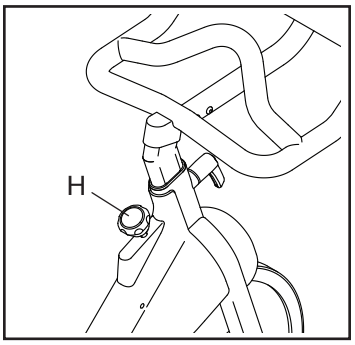

To change the resistance of the pedals, press the buttons on the console (see step 3 on page 21). **To stop the flywheel, push the brake knob (H) downward. The flywheel should quickly come to a complete stop.**

HOW TO USE THE CONSOLE

CONSOLE DIAGRAM

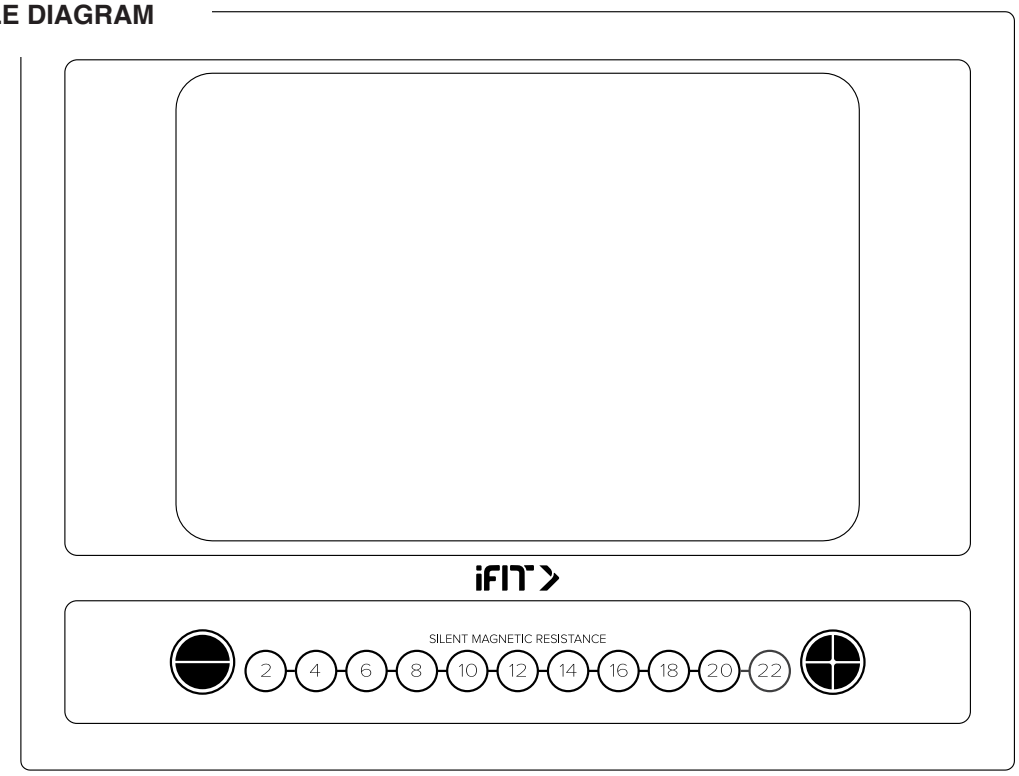

FEATURES OF THE CONSOLE

The advanced console offers an array of features designed to make your workouts more effective and enjoyable.

The console features wireless technology that enables the console to connect to iFit. With iFit, you can access a large and varied workout library, create your own workouts, track your workout results, and access many other features.

In addition, the console features a selection of onboard workouts. Each workout automatically controls the resistance of the pedals as it guides you through an effective exercise session.

When you use the manual mode of the console, you can change the resistance of the pedals with the touch of a button.

While you exercise, the console will display continuous exercise feedback. You can also measure your heart rate using an optional chest heart rate monitor (see page 28 for more information).

You can also listen to your favorite workout music or audio books with the console sound system while you exercise.

To activate the console or turn off the console, see page 19. **To learn how to use the touch screen,** see page 19. **To set up the console,** see page 20.

HOW TO ACTIVATE THE CONSOLE

The included power adapter must be used to operate the exercise bike. See HOW TO PLUG IN THE POWER ADAPTER on page 15. When the power adapter is plugged in, simply touch the screen to activate the console.

HOW TO TURN OFF THE CONSOLE

When you are finished exercising, unplug the power adapter. **IMPORTANT: If you do not do this, the electrical components on the exercise bike may wear prematurely.**

HOW TO USE THE TOUCH SCREEN

The console features a tablet with a full-color touch screen. The following information will help you use the touch screen:

- The console functions similarly to other tablets. You can slide or flick your finger against the screen to move certain images on the screen, such as the displays in a workout.
- To type information into a text box, first touch the text box to view the keyboard. To use numbers or other characters on the keyboard, touch *?123*. To view more characters, touch *~[<*. Touch *?123* again to return to the number keyboard. To return to the letter keyboard, touch *ABC*. To use a capital character, touch the shift button (upward-facing arrow symbol). To use multiple capital characters, touch the shift button again. To return to the lowercase keyboard, touch the shift button a third time. To clear the last character, touch the clear button (backward-facing arrow with an X symbol).

HOW TO SET UP THE CONSOLE

Before you use the exercise bike for the first time, set up the console.

1. **Connect to your wireless network.**

   To use iFit workouts and to use several other features of the console, the console must be connected to a wireless network. Follow the prompts on the screen to connect the console to your wireless network.

2. **Customize settings.**

   Follow the prompts on the screen to set the desired unit of measurement and your time zone.

   Note: To change these settings later, see HOW TO CHANGE CONSOLE SETTINGS on page 26.

3. **Log into or create an iFit account.**

   Follow the prompts on the screen to log into your iFit account or to create an iFit account.

4. **Tour the console.**

   The first time you use the console, a tour presentation will guide you through the features of the console.

5. **Check for firmware updates.**

   First, touch the menu button (three horizontal lines symbol), touch *Settings*, touch *Maintenance*, and then touch *Update*. The console will check for firmware updates. For more information, see HOW TO CHANGE CONSOLE SETTINGS on page 26.

The console is now ready for you to begin working out. The following pages explain the workouts and other features that the console offers.

To use the manual mode, see page 21. **To use a featured workout or an onboard workout,** see page 22. **To create a draw-your-own-map workout,** see page 24. **To use an iFit workout,** see page 25.

To change console settings, see page 26. **To connect to a wireless network,** see page 27. **To use the sound system,** see page 28.

Note: If there is a sheet of plastic on the screen, remove the plastic.

HOW TO USE THE MANUAL MODE

1. **Touch the screen or press any button on the console to turn on the console.**

   See HOW TO ACTIVATE THE CONSOLE on page 19. Note: It may take a few moments for the console to be ready for use.

2. **Select the main menu.**

   When you turn on the console, the main menu will appear on the screen after the console boots up.

   If you are in a workout, touch the screen and follow the prompts to end the workout and return to the main menu. If you are in the settings menus, touch the back button (arrow symbol) and then touch the close button (x symbol) to return to the main menu.

3. **Change the resistance of the pedals as desired.**

   Touch *Manual Start* and begin pedaling.

   To change the resistance of the pedals, press the Silent Magnetic Resistance buttons on the console or touch the Resistance sliders on the screen.

   Note: To view the Resistance sliders on the screen, touch the profile button (person symbol) on the screen, touch *Settings*, touch *In Workout*, and then turn on this setting (see HOW TO CHANGE CONSOLE SETTINGS on page 26).

4. **Follow your progress.**

   The console offers several display modes. The display mode that you select will determine which workout information is shown.

   Drag upward on the screen to enter the fullscreen display mode. Drag downward on the screen to view the workout information displays.

   Touch the various workout information displays to view more options. Touch the more button (+ symbol) to view statistics or charts. Touch the center of the screen to view even more display mode options.

   If desired, adjust the volume level by pressing the volume increase and decrease buttons on the right side of the console.

   To pause the workout, simply touch the screen or stop pedaling. To continue the workout, simply resume pedaling.

   To end the workout session, first touch the screen to pause the workout. Next, touch *End*; a workout summary will appear on the screen. If desired, you can publish your results using one of the options on the screen. Then, touch *Finish* to return to the main menu.

5. **Wear a heart rate monitor and measure your heart rate if desired.**

   You can wear an optional heart rate monitor to measure your heart rate. For more information about the optional heart rate monitor, see page 28. Note: The console is compatible with Bluetooth® Smart heart rate monitors.

   The console will connect to your heart rate monitor automatically. When your heartbeat is detected, your heart rate will be shown.

6. **When you are finished exercising, unplug the power adapter.**

   See HOW TO TURN OFF THE CONSOLE on page 19.

HOW TO USE A FEATURED WORKOUT OR AN ONBOARD WORKOUT

1. **Touch the screen or press any button on the console to turn on the console.**

   See HOW TO ACTIVATE THE CONSOLE on page 19. Note: It may take a few moments for the console to be ready for use.

2. **Select the main menu or the workout library.**

   When you turn on the console, the main menu will appear on the screen after the console boots up.

   If you are in a workout, touch the screen and follow the prompts to end the workout and return to the main menu. If you are in the settings menus, touch the back button (arrow symbol) and then touch the close button (x symbol) to return to the main menu.

   Touch the buttons at the bottom of the screen to select either the main menu (Home button) or the workout library (Browse button).

3. **Select a workout.**

   To select a workout from the main menu or the workout library, simply touch the desired workout button on the screen. Slide or flick the screen to scroll upward or downward if necessary.

   Note: To use a featured workout, the console must be connected to a wireless network (see HOW TO CONNECT TO A WIRELESS NETWORK on page 27).

   The featured workouts on your console will change periodically. To save one of the featured workouts for future use, you can add it as a favorite by touching the favorites button (heart symbol). You must be logged into your iFit account to save a featured workout (see step 3 on page 25).

   To draw your own map for a workout, see HOW TO CREATE A DRAW-YOUR-OWN-MAP WORKOUT on page 24.

   When you select a workout, the screen will show an overview of the workout that includes details such as the duration and distance of the workout and the approximate number of calories you will burn during the workout.

4. **Start the workout.**

   Touch *Start Workout* to start the workout.

   The workout will function in the same way as the manual mode (see page 21).

   During some workouts, an iFit coach will guide you through a video workout. Touch the sound button (music notes symbol) to select music, trainer voice, and volume options for the workout.

   During some workouts, the screen will show a map of the route and a marker indicating your progress. Touch the buttons on the screen to select the desired map options.

   During some workouts, the screen may show a target speed. As you exercise, keep your pedaling speed near the target speed shown on the screen. A message may appear prompting you to increase, decrease, or maintain your pedaling speed.

   IMPORTANT: The target speed is intended only to provide motivation. Your actual pedaling speed may be slower than the target speed. Make sure to pedal at a speed that is comfortable for you.

If the resistance level is too high or too low, you can manually override the setting by pressing the Silent Magnetic Resistance buttons. **If you press a Silent Magnetic Resistance button,** you can then manually control the resistance level (see step 3 on page 21). **To return to the programmed resistance settings of the workout,** touch *Follow Workout*.

Note: The calorie goal shown in the workout description is an estimate of the number of calories that you will burn during the workout. The actual number of calories that you burn will depend on various factors, such as your weight. In addition, if you manually change the resistance level during the workout, the number of calories you burn will be affected.

To pause the workout, simply touch the screen or stop pedaling. To continue the workout, simply resume pedaling.

To end the workout, touch the screen to pause the workout, and then follow the prompts on the screen to end the workout and return to the main menu.

When the workout ends, a workout summary will appear on the screen. If desired, you can select options such as adding the workout to your schedule (see HOW TO USE AN IFIT WORKOUT on page 25) or adding the workout to your favorites list. Then, touch *Save Workout* to return to the main menu.

5. **Follow your progress.**

   See step 4 on page 21.

6. **Wear a heart rate monitor and measure your heart rate if desired.**

   See step 5 on page 21.

7. **When you are finished exercising, unplug the power adapter.**

   See HOW TO TURN OFF THE CONSOLE on page 19.

HOW TO CREATE A DRAW-YOUR-OWN-MAP WORKOUT

1. **Touch the screen or press any button on the console to turn on the console.**

   See HOW TO ACTIVATE THE CONSOLE on page 19. Note: It may take a few moments for the console to be ready for use.

2. **Select a draw-your-own-map workout.**

   When you turn on the console, the main menu will appear on the screen after the console boots up.

   If you are in a workout, touch the screen and follow the prompts to end the workout and return to the main menu. If you are in the settings menus, touch the back button (arrow symbol) and then touch the close button (x symbol) to return to the main menu.

   To select a draw-your-own-map workout, touch the Create button at the bottom of the screen.

3. **Draw your map.**

   Navigate to the area on the map where you want to draw your workout by typing in the search box or by sliding your fingers on the screen. Touch the screen to add the start point for your workout. Then, touch the screen to add the end point for your workout.

   If you want to start and end your workout at the same point, touch *Close Loop* or *Out & Back* in the map options. You can also select whether you want your workout to snap to the road.

   If you make a mistake, touch *Undo* in the map options.

   The screen will display the elevation and distance statistics for your workout.

4. **Save your workout.**

   Touch *Save New Workout* to save your workout. If desired, enter a title and description for your workout. Then, touch the continue button (> symbol).

5. **Start the workout.**

   Touch *Start Workout* to start the workout. The workout will function in the same way as a featured workout or an onboard workout (see page 22).

6. **Follow your progress.**

   See step 4 on page 21.

7. **Wear a heart rate monitor and measure your heart rate if desired.**

   See step 5 on page 21.

8. **When you are finished exercising, unplug the power adapter.**

   See HOW TO TURN OFF THE CONSOLE on page 19.

HOW TO USE AN IFIT WORKOUT

To use an iFit workout, the console must be connected to a wireless network (see HOW TO CONNECT TO A WIRELESS NETWORK on page 27). An iFit account is also required.

1. **Add workouts to your schedule on iFit.com.**

   On your computer, smartphone, tablet, or other device, open an internet browser, go to iFit.com, and log in to your iFit account.

   Next, navigate to Menu > Library on the website. Browse the workout programs in the library and join the desired workouts.

   Then, navigate to Menu > Schedule to view your schedule. All of the workouts that you have joined will appear on your schedule; you can arrange or delete the workouts on your schedule as desired.

   Take time to explore the iFit.com website before you log out.

2. **Select the main menu.**

   When you turn on the console, the main menu will appear on the screen after the console boots up.

   If you are in a workout, touch the screen and follow the prompts to end the workout and return to the main menu. If you are in the settings menus, touch the back button (arrow symbol) and then touch the close button (x symbol) to return to the main menu.

3. **Log in to your iFit account.**

   If you have not already done so, touch the menu button (three horizontal lines symbol) on the screen and then touch *Log in* to log in to your iFit account. Follow the prompts on the screen to enter your username and password.

   To switch users within your iFit account, touch the menu button, touch *Settings*, and then touch *Manage Accounts*. If more than one user is associated with the account, a list of users will appear. Touch the name of the desired user.

4. **Select an iFit workout that you have previously added to your schedule on iFit.com.**

   IMPORTANT: Before iFit workouts will load, you must add them to your schedule on iFit.com (see step 1).

   To load an iFit workout from iFit.com to the console, touch the Calendar button at the bottom of the screen.

   When you load a workout, the screen will show an overview of the workout that includes details such as the duration and distance of the workout and the approximate number of calories you will burn during the workout.

5. **Start the workout.**

   Touch *Start Workout* to start the workout. The workout will function in the same way as a featured workout or an onboard workout (see page 22).

6. **Follow your progress.**

   See step 4 on page 21.

7. **Wear a heart rate monitor and measure your heart rate if desired.**

   See step 5 on page 21.

8. **When you are finished exercising, unplug the power adapter.**

   See HOW TO TURN OFF THE CONSOLE on page 19.

For more information about iFit, go to iFit.com.

HOW TO CHANGE CONSOLE SETTINGS

IMPORTANT: Some of the settings and features described may not be enabled. Occasionally, a firmware update may cause your console to function slightly differently.

1. **Select the settings main menu.**

   First, activate the console (see HOW TO ACTIVATE THE CONSOLE on page 19). Note: It may take a few moments for the console to be ready for use.

   Next, select the main menu (Home button). When you turn on the console, the main menu will appear on the screen after the console boots up. If you are in a workout, touch the screen and follow the prompts to end the workout and return to the main menu. If you are in the settings menus, touch the back button (arrow symbol) and then touch the close button (x symbol) to return to the main menu.

   Then, touch the menu button (three horizontal lines symbol) on the screen, and then touch *Settings*. The settings menu will appear on the screen.

2. **Navigate the settings menus and change settings as desired.**

   Slide or flick the screen to scroll upward or downward if necessary. To view a settings menu, simply touch the menu name. To exit a menu, touch the back button (arrow symbol). You may be able to view and change settings in the following settings menus:

   Account
   - My Profile
   - In Workout
   - Manage Accounts

   Equipment
   - Equipment Info
   - Equipment Settings
   - Maintenance
   - Wi-Fi

   About
   - Legal

3. **Customize the unit of measurement and other settings.**

   To customize the unit of measurement, the time zone, or other settings, touch *Equipment Info* or *Equipment Settings*, and then touch the desired settings.

   The console can display speed and distance in either standard or metric units of measurement.

4. **View machine information or console app information.**

   Touch *Equipment Info*, and then touch *Machine Info* or *App Info* to view information about your exercise bike or about the console app.

5. **Update the console firmware.**

   For the best results, regularly check for firmware updates. Touch *Maintenance*, and then touch *Update* to check for firmware updates using your wireless network. The update will begin automatically. **IMPORTANT: To avoid damaging the exercise bike, do not turn off the power while the firmware is being updated.**

   The screen will show the progress of the update. When the update is complete, the exercise bike will turn off and then turn back on. If it does not, press the power switch into the off position. Wait for several seconds, and then press the power switch into the reset position. Note: It may take a few minutes for the console to be ready for use.

   Note: Occasionally, a firmware update may cause the console to function slightly differently. These updates are always designed to improve your exercise experience.

6. **Exit the settings main menu.**

   If you are in a settings menu, touch the back button. Then, touch the close button (x symbol) to exit the settings main menu.

HOW TO CONNECT TO A WIRELESS NETWORK

To use iFit workouts and to use several other features of the console, the console must be connected to a wireless network.

1. **Select the main menu.**

   First, activate the console (see HOW TO ACTIVATE THE CONSOLE on page 19). Note: It may take a few moments for the console to be ready for use.

   Next, select the main menu (Home button). When you turn on the console, the main menu will appear on the screen after the console boots up. If you are in a workout, touch the screen and follow the prompts to end the workout and return to the main menu. If you are in the settings menus, touch the back button (arrow symbol) and then touch the close button (x symbol) to return to the main menu.

2. **Select the wireless network menu.**

   Touch the menu button (three horizontal lines symbol), and then touch *Wi-Fi* to select the wireless network menu.

3. **Enable Wi-Fi.**

   Make sure that Wi-Fi® is enabled. If it is not enabled, touch the *Wi-Fi* toggle to enable it.

4. **Set up and manage a wireless network connection.**

   When Wi-Fi is enabled, the screen will show a list of available networks. Note: It may take a few moments for the list of wireless networks to appear.

   Note: You must have your own wireless network and an 802.11b/g/n router with SSID broadcast enabled (hidden networks are not supported).

   When a list of networks appears, touch the desired network. Note: You will need to know your network name (SSID). If your network has a password, you will also need to know the password.

   Follow the prompts on the screen to enter your password and connect to the selected wireless network. (To use the keyboard, see HOW TO USE THE TOUCH SCREEN on page 19.)

   When the console is connected to your wireless network, a checkmark will appear next to the wireless network name.

   If you are having problems connecting to an encrypted network, make sure that your password is correct. Note: Passwords are case-sensitive.

   Note: The console supports unsecured and secured (WEP, WPA™, and WPA2™) encryption. A broadband connection is recommended; performance depends on connection speed.

   Note: If you have questions after following these instructions, go to support.iFit.com for assistance.

5. **Exit the wireless network menu.**

   To exit the wireless network menu, touch the back button (arrow symbol).

HOW TO USE THE SOUND SYSTEM

To play music or audio books through the console sound system while you exercise, plug a 3.5 mm male to 3.5 mm male audio cable (not included) into the jack on the right side of the console and into a jack on your personal audio player; **make sure that the audio cable is fully plugged in. Note: To purchase an audio cable, see your local electronics store.**

Next, press the play button on your personal audio player. Adjust the volume level by pressing the volume increase and decrease buttons on the right side of the console or the volume control on your personal audio player.

To listen to the console audio with your personal headphones or ear buds, plug your headphones into the headphones jack on the right side of the console.

THE OPTIONAL CHEST HEART RATE MONITOR

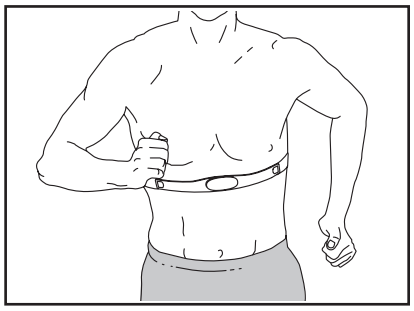

Whether your goal is to burn fat or to strengthen your cardiovascular system, the key to achieving the best results is to maintain the proper heart rate during your workouts. The optional chest heart rate monitor will enable you to continuously monitor your heart rate while you exercise, helping you to reach your personal fitness goals. **To purchase a chest heart rate monitor, please see the front cover of this manual.**

Note: The console is compatible with all Bluetooth Smart heart rate monitors.

FCC INFORMATION

This equipment has been tested and found to comply with the limits for a Class B digital device, pursuant to part 15 of the FCC Rules. These limits are designed to provide reasonable protection against harmful interference in a residential installation. This equipment generates, uses, and can radiate radio frequency energy and, if not installed and used in accordance with the instructions, may cause harmful interference to radio communications. However, there is no guarantee that interference will not occur in a particular installation. If this equipment does cause harmful interference to radio or television reception, which can be determined by turning the equipment off and on, try to correct the interference by one or more of the following measures:

- Reorient or relocate the receiving antenna.
- Increase the separation between the equipment and the receiver.
- Connect the equipment into an outlet on a circuit different from that to which the receiver is connected.
- Consult the dealer or an experienced radio/TV technician for help.

FCC CAUTION: To assure continued compliance, use only shielded interface cables when connecting to computer or peripheral devices. Changes or modifications not expressly approved by the party responsible for compliance could void the user's authority to operate this equipment.

IMPORTANT: To satisfy exposure compliance requirements, the antenna and transmitter in the console must be at least 8 in. (20 cm) from all persons and must not be near or connected to any other antenna or transmitter.

Note: The console contains FCC ID: OMC402547.

MAINTENANCE AND TROUBLESHOOTING

HOW TO MAINTAIN THE EXERCISE BIKE

Regular maintenance is important for optimal performance and to reduce wear. Inspect and properly tighten all parts each time the exercise bike is used. Replace any worn parts immediately.

To clean the exercise bike, use a damp cloth and a small amount of mild detergent. **IMPORTANT: To avoid damage to the console, keep liquids away from the console and keep the console out of direct sunlight.**

HOW TO TROUBLESHOOT THE CONSOLE

If the console does not turn on, make sure that the power adapter is fully plugged in. If there are exterior wires on the console, make sure that the connectors on the wires are oriented correctly and are connected firmly.

If you are having problems connecting the console to a wireless network, or if you are having problems with your iFit account or iFit workouts, go to support.iFit.com.

If a replacement power adapter is needed, call the telephone number on the cover of this manual. IMPORTANT: To avoid damaging the console, use only a manufacturer-supplied regulated power adapter.

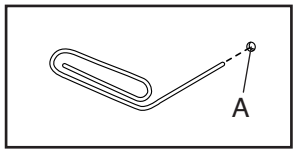

If the console does not boot up properly, or if the console freezes and does not respond, reset the console to the factory default settings. **IMPORTANT: Doing this will erase all custom settings you have made to the console.** Resetting the console requires two people. First, unplug the power adapter. Next, locate the small reset opening (A) on the back or the side of the console. Using a bent paper clip, press and hold the reset button inside the opening, and have a second person plug in the power adapter. Continue holding the reset button until the console turns on. When the reset operation is complete, the console will turn off and then turn back on. If it does not, unplug and then plug in the power adapter. Once the console turns on, check for firmware updates (see step 5 on page 26). Note: It may take a few minutes for the console to be ready for use.

HOW TO ADJUST THE REED SWITCH

If the console does not display correct feedback, the reed switch should be adjusted.

To adjust the reed switch, **first unplug the power adapter.** Next, locate the Reed Switch (57) on the left side of the exercise bike. Slightly loosen the two M4 x 20mm Screws (87).

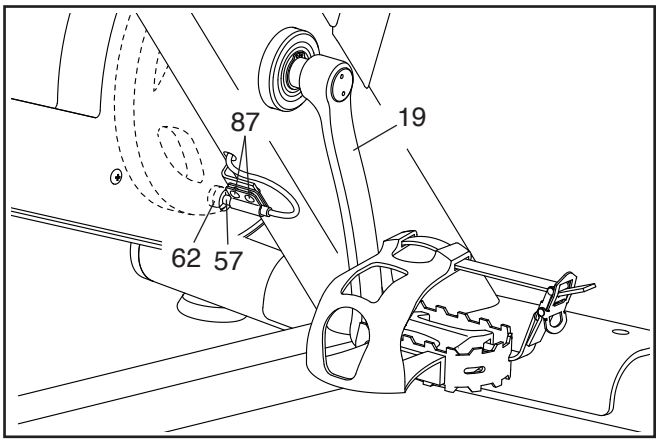

Next, turn the Left Crank Arm (19) until a Magnet (62) is aligned with the Reed Switch (57). Slide the Reed Switch slightly toward or away from the Magnet. Then, retighten the M4 x 20mm Screws (87).

Plug in the power adapter and turn the Left Crank Arm (19) for a moment. Repeat the procedure above, if necessary, until the console displays correct feedback.

When the Reed Switch (57) is correctly adjusted, plug in the power adapter.

HOW TO ADJUST THE DRIVE BELT

If the pedals slip while you are pedaling, even when the resistance is adjusted to the highest level, the drive belt may need to be adjusted.

To adjust the drive belt, first **unplug the power adapter.** Next, locate the Idler Cover (36). Remove the M4 x 12mm Screw (80) and the Idler Cover.

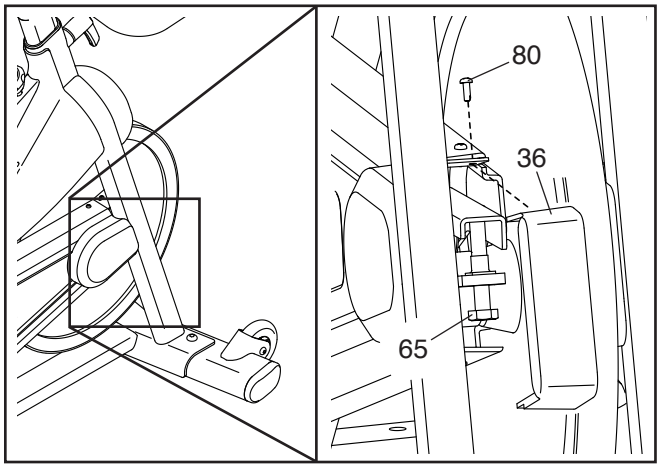

Then, tighten the M10 x 60mm Screw (65) until the Drive Belt (not shown) is tight.

When the Drive Belt (not shown) is tight, reattach the Idler Cover (36) and plug in the power adapter.

EXERCISE GUIDELINES

⚠WARNING: Before beginning this or any exercise program, consult your physician. This is especially important for persons over age 35 or persons with pre-existing health problems.

These guidelines will help you to plan your exercise program. For detailed exercise information, obtain a reputable book or consult your physician. Remember, proper nutrition and adequate rest are essential for successful results.

EXERCISE INTENSITY

Whether your goal is to burn fat or to strengthen your cardiovascular system, exercising at the proper intensity is the key to achieving results. You can use your heart rate as a guide to find the proper intensity level. The chart below shows recommended heart rates for fat burning and aerobic exercise.

165	*155*	*145*	*140*	*130*	*125*	*115*	♥
145	*138*	*130*	*125*	*118*	*110*	*103*	♥
125	*120*	*115*	*110*	*105*	*95*	*90*	♥
20	*30*	*40*	*50*	*60*	*70*	*80*	

To find the proper intensity level, find your age at the bottom of the chart (ages are rounded off to the nearest ten years). The three numbers listed above your age define your "training zone." The lowest number is the heart rate for fat burning, the middle number is the heart rate for maximum fat burning, and the highest number is the heart rate for aerobic exercise.

Burning Fat—To burn fat effectively, you must exercise at a low intensity level for a sustained period of time. During the first few minutes of exercise, your body uses carbohydrate calories for energy. Only after the first few minutes of exercise does your body begin to use stored fat calories for energy. If your goal is to burn fat, adjust the intensity of your exercise until your heart rate is near the lowest number in your training zone. For maximum fat burning, exercise with your heart rate near the middle number in your training zone.

Aerobic Exercise—If your goal is to strengthen your cardiovascular system, you must perform aerobic exercise, which is activity that requires large amounts of oxygen for prolonged periods of time. For aerobic exercise, adjust the intensity of your exercise until your heart rate is near the highest number in your training zone.

HOW TO MEASURE YOUR HEART RATE

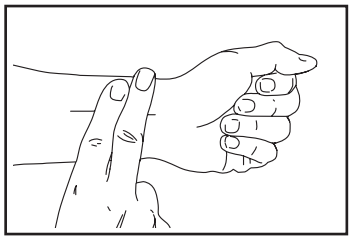

To measure your heart rate, exercise for at least four minutes. Then, stop exercising and place two fingers on your wrist as shown. Take a six-second heartbeat count, and multiply the result by 10 to find your heart rate. For example, if your six-second heartbeat count is 14, your heart rate is 140 beats per minute.

WORKOUT GUIDELINES

Warming Up—Start with 5 to 10 minutes of stretching and light exercise. A warm-up increases your body temperature, heart rate, and circulation in preparation for exercise.

Training Zone Exercise—Exercise for 20 to 30 minutes with your heart rate in your training zone. (During the first few weeks of your exercise program, do not keep your heart rate in your training zone for longer than 20 minutes.) Breathe regularly and deeply as you exercise; never hold your breath.

Cooling Down—Finish with 5 to 10 minutes of stretching. Stretching increases the flexibility of your muscles and helps to prevent post-exercise problems.

EXERCISE FREQUENCY

To maintain or improve your condition, complete three workouts each week, with at least one day of rest between workouts. After a few months of regular exercise, you may complete up to five workouts each week, if desired. Remember, the key to success is to make exercise a regular and enjoyable part of your everyday life.

PART LIST

Model No. PFEX79920.0 R1119A

Key No.	Qty.	Description
1	1	Frame
2	1	Front Stabilizer
3	1	Rear Stabilizer
4	1	Handlebar
5	1	Console Mount
6	1	Console
7	1	Saddle Post
8	1	Saddle
9	1	Saddle Arm
10	1	Saddle Carriage
11	1	Left Weight Rest
12	1	Right Weight Rest
13	1	Carriage Handle
14	2	Adjustment Handle
15	1	Water Bottle Holder
16	1	Right Pedal
17	1	Left Pedal
18	1	Crank/Right Crank Arm
19	1	Left Crank Arm
20	1	Resistance Cable
21	1	Resistance Bracket
22	1	Resistance Spring
23	1	Resistance Magnet
24	1	Resistance Motor
25	1	Brake Knob
26	1	Console Bracket
27	1	Brake Shaft
28	1	Brake Spring
29	1	Brake Bracket
30	2	Brake Spacer
31	1	Idler
32	1	Cover Bracket
33	1	Right Hub Cover
34	1	Outer Belt Cover
35	1	Inner Belt Cover
36	1	Idler Cover
37	1	Left Hub Cover
38	1	Motor Cover
39	1	Brake Cover
40	1	Saddle Post Sleeve
41	1	Handlebar Sleeve
42	2	Crank Arm Cap
43	2	Snap Ring
44	2	Crank Bearing
45	1	Pulley
46	1	Drive Belt
47	1	Flywheel
48	1	Flywheel Axle
49	2	Flywheel Bearing
50	1	Flywheel Spacer
51	2	Wheel
52	2	Foot
53	2	Leveling Foot
54	4	Cap
55	1	Saddle Post Cap
56	1	Bracket Mount
57	1	Reed Switch/Wire
58	1	Clamp
59	2	Hand Weight
60	1	Flywheel Washer
61	4	Clip Nut
62	2	Magnet
63	4	M8 x 20mm Flat Head Screw
64	8	M8 Locknut
65	1	M10 x 60mm Screw
66	1	Crank Screw
67	1	Bracket Spacer
68	2	M10 Locknut
69	4	M10 x 25mm Screw
70	2	M6 Bolt Set
71	4	M6 x 15mm Screw
72	2	M8 x 45mm Bolt
73	2	M6 x 45mm Shoulder Screw
74	4	M4 x 10mm Screw
75	2	M12 Locknut
76	1	M5 x 35mm Bolt
77	1	M5 Locknut
78	1	Brake Bushing
79	8	M6 x 12mm Screw
80	11	M4 x 12mm Screw
81	4	M4 x 16mm Screw
82	1	Frame Wire
83	1	Thrust Washer
84	1	Ground Screw
85	2	M12 Nut
86	1	Power Adapter
87	15	M4 x 20mm Screw
88	2	M4 x 19mm Flange Screw
89	1	Power Wire/Receptacle
90	1	Handlebar Wire
91	1	Mount Wire
92	2	M8 Washer
93	1	M8 x 80mm Bolt
94	2	Outer Pivot Disc
95	2	Inner Pivot Disc
96	2	Upper/Lower Pivot Disc
97	1	Center Pivot Disc
98	1	Wire Protector
99	1	Pivot Spacer
*	–	Assembly Tool
*	–	User's Manual

Note: Specifications are subject to change without notice. For information about ordering replacement parts, see the back cover of this manual. *These parts are not illustrated.

EXPLODED DRAWING A

Model No. PFEX79920.0 R1119A

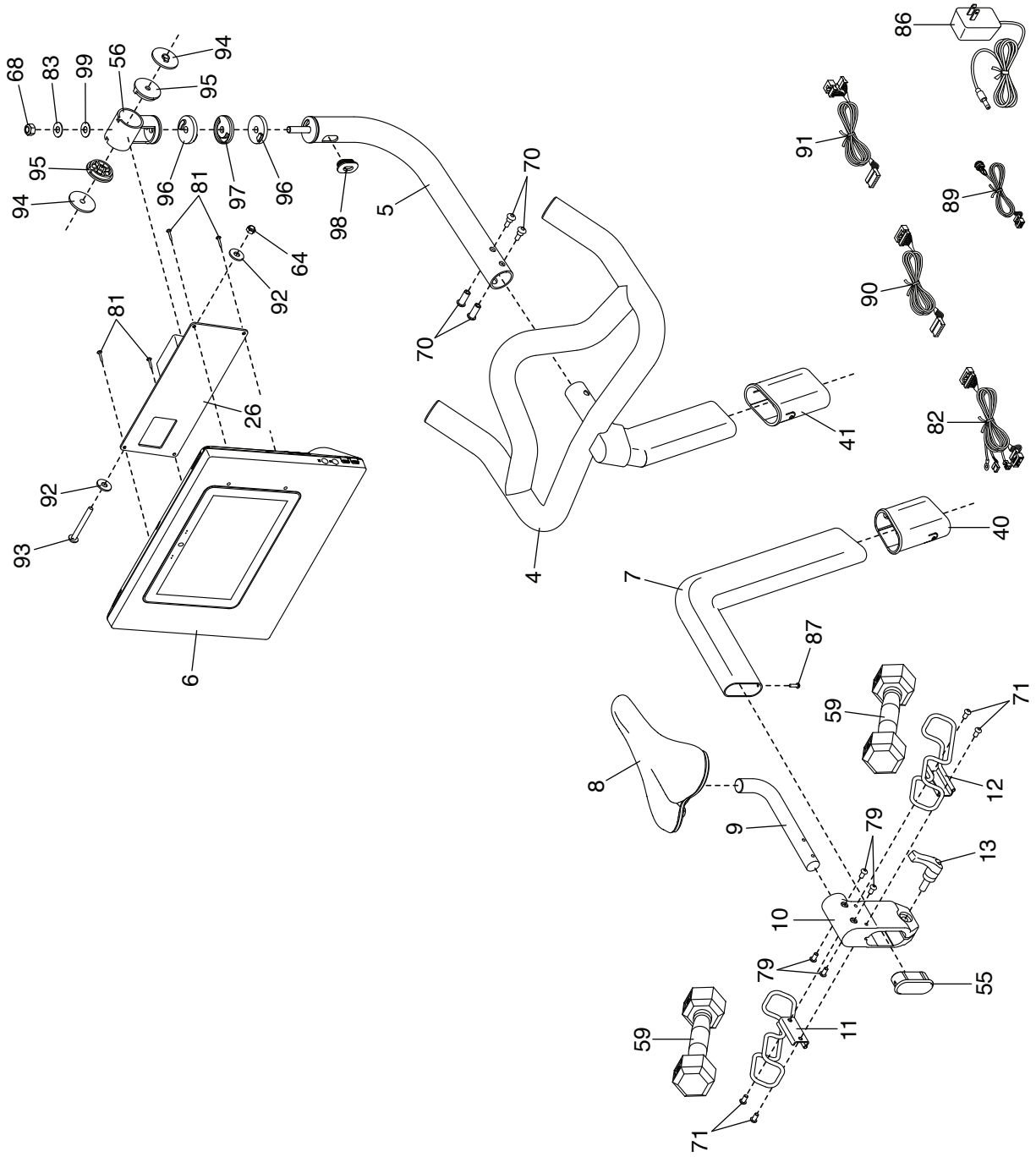

EXPLODED DRAWING B

Model No. PFEX79920.0 R1119A

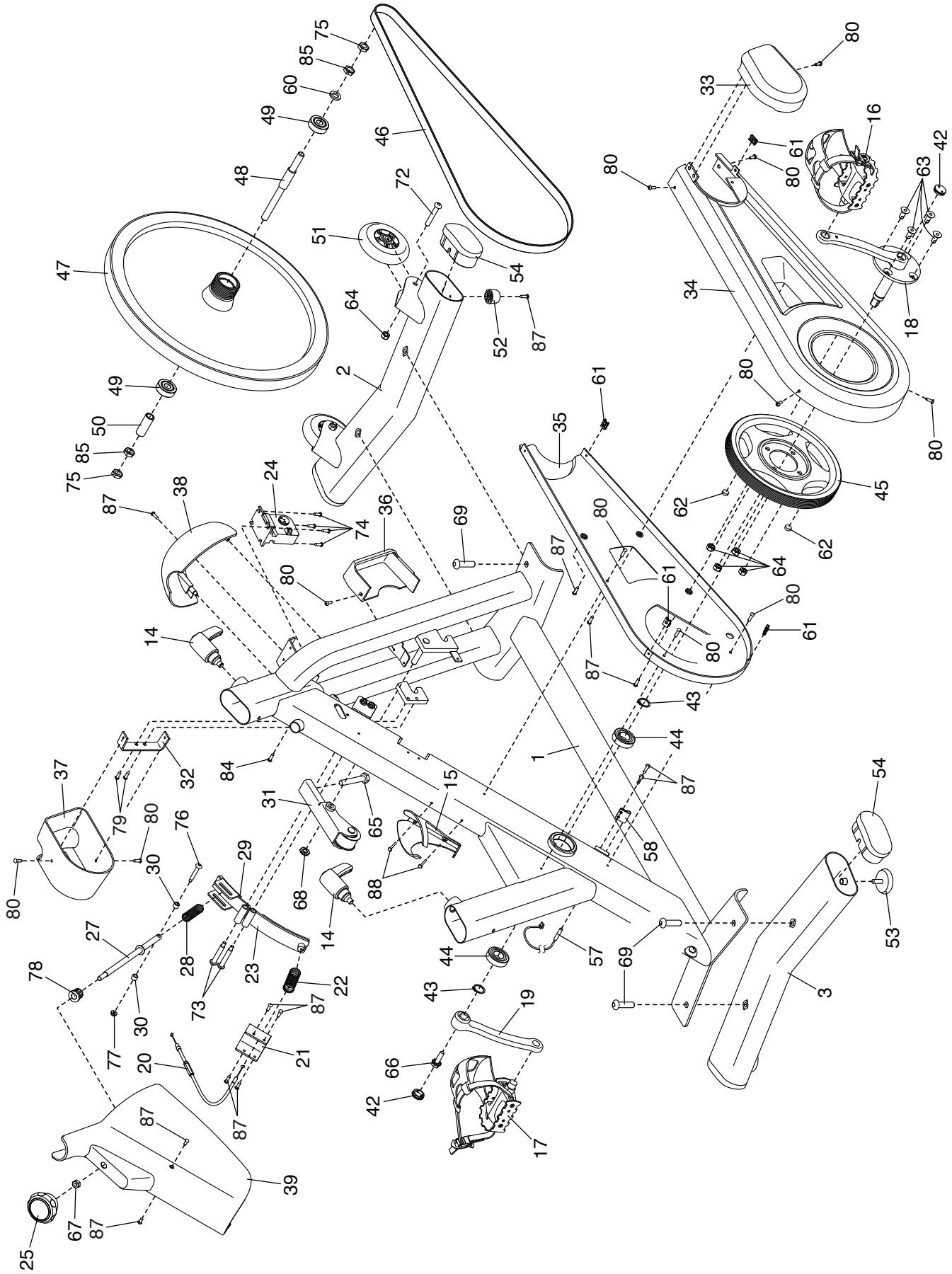

ORDERING REPLACEMENT PARTS

To order replacement parts, please see the front cover of this manual. To help us assist you, be prepared to provide the following information when contacting us:

- the model number and serial number of the product (see the front cover of this manual)
- the name of the product (see the front cover of this manual)
- the key number and description of the replacement part(s) (see the PART LIST and the EXPLODED DRAWING near the end of this manual)

LIMITED WARRANTY

IMPORTANT: To protect your fitness equipment with an extended service plan, see page 4.

ICON Health & Fitness, Inc. (ICON) warrants this product to be free from defects in workmanship and material, under normal use and service conditions. The frame is warranted for ten (10) years from the date of purchase. Parts are warranted for two (2) years from the date of purchase. Labor is warranted for one (1) year from the date of purchase.

This warranty extends only to the original purchaser (customer) and is not transferrable. ICON's obligation under this warranty is limited to repairing or replacing, at ICON's option, the product through one of its authorized service providers. All repairs for which warranty claims are made must be preauthorized by ICON. If replacement parts are shipped while the product is under warranty, the customer will be responsible for a minimal handling charge. For in-home service, the customer may be responsible for a minimal trip charge. This warranty does not extend to freight damage to the product. This warranty will automatically be voided by the following conditions: (1) if the product is used as a store display model, (2) if the product is purchased or transported outside the USA, (3) if all instructions and warnings in this manual are not followed, (4) if the product is abused or improperly or abnormally used, or (5) if the product is used for commercial or rental purposes. No other warranty beyond that specifically set forth above is authorized by ICON.

ICON is not responsible or liable for the following damages: (1) indirect, special, or consequential damages arising out of or in connection with the use or performance of the product; (2) damages with respect to any economic loss, loss of property, loss of revenues or profits, loss of enjoyment or use, or costs of removal or installation; or (3) other consequential damages of any kind. Some states do not allow the exclusion or limitation of incidental or consequential damages. Accordingly, the above limitation may not apply to the customer.

The warranty extended hereunder is in lieu of any and all other warranties, and any implied warranties of merchantability or fitness for a particular purpose are limited in their scope and duration to the terms set forth herein. Some states do not allow limitations on how long an implied warranty lasts. Accordingly, the above limitation may not apply to the customer. This warranty provides specific legal rights; the customer may have other rights that vary from state to state.

For warranty service, please call the telephone number on the front cover of this manual. Please be prepared to provide the model number and serial number of the product (see the front cover of this manual).

ICON Health & Fitness, Inc., 1500 S. 1000 W., Logan, UT 84321-9813

Part No. 414728 R1119A
Printed in China © 2019 ICON Health & Fitness, Inc.