BOWFLEX

LATERALX™

LX5

ASSEMBLY / OWNER'S MANUAL

Welcome to the Bowflex™ LateralX™ LX5 fitness machine!

You're about to experience an incredible workout that can help you lose weight and reshape your entire body so you'll look and feel better than ever before. We thank you for trusting in the Bowflex brand.

Use this Manual as a guide to getting started on your Bowflex™ workouts and for tips to keep your machine well maintained.

Yours in Health,
The Bowflex Family

Table of Contents

Important Safety Instructions 3
Safety Warning Labels and Serial Number..... 5
Specifications / Before Assembly 6
Parts 7
Hardware / Tools 8
Unboxing Your Machine..... 9
Assembly 11
Moving Your Machine 22
Leveling Your Machine 22
Features 23
Connectivity with the Fitness App 27
Operations..... 30
Adjusting the Pedals 30
Mounting and Dismounting 30
Power Up / Idle Mode 31
User Profiles 31
Workout Programs 32
Pausing or Stopping 35
Workout Complete / Results 36
Celebrations 36
Machine Settings Mode 37
Maintenance..... 38
Maintenance Parts..... 40
Troubleshooting..... 41
Body Weight Loss Guide..... 43
Warranty (US/Canada only)..... 51

To validate warranty support, keep the original proof of purchase and record the following information:

Serial Number _____ Date of Purchase _____

If purchased in US/Canada: To register your product warranty, go to: **www.bowflex.com/register**
Or call 1 (800) 605–3369.

If you have questions or problems with your product, please call 1 (800) 605–3369.

If purchased outside US/Canada: To register your product warranty, contact your local distributor.

For details regarding product warranty or if you have questions or problems with your product, please contact your local distributor. To find your local distributor, go to: www.nautilusinternational.com

Nautilus, Inc., 5415 Centerpoint Parkway, Groveport, OH 43125 USA, www.NautilusInc.com - Customer Service: North America (800) 605-3369, csnls@nautilus.com | outside U.S. www.nautilusinternational.com | Printed in China | © 2017 Nautilus, Inc. | Bowflex, the B logo, LateralX, Bowflex LateralX, X-mode, Nautilus, and Schwinn are trademarks owned or licensed by Nautilus, Inc., which are registered or otherwise protected by common law in the United States and other countries. Polar®, OwnCode®, Google Play™, and Nut Thins® are trademarks of their respective owners. App Store is a service mark of Apple Inc. The Bluetooth® word mark and logos are registered trademarks owned by Bluetooth SIG, Inc., and any use of such marks by Nautilus, Inc. is under license.

ORIGINAL MANUAL - ENGLISH VERSION ONLY

When using an electrical appliance, basic precautions should always be followed, including the following:

This icon means a potentially hazardous situation which, if not avoided, could result in death or serious injury.

Obey the following warnings:

Read and understand all Warnings on this machine.

Carefully read and understand the Assembly/Owner's Manual.

- Keep bystanders and children away from the product you are assembling at all times.
- Do not connect power supply to the machine until instructed to do so.
- The machine should never be left unattended when plugged in. Unplug from outlet when not in use, and before putting on or taking off parts.
- Before each use, examine the machine for damage to power cord, loose parts or signs of wear. Do not use if found in this condition. If purchased in US/Canada, contact Customer Service for repair information. If purchased outside US/Canada, contact your local distributor for repair information.
- Do not drop or put objects into any opening of the machine.
- Do not assemble this machine outdoors or in a wet or moist location.
- Make sure assembly is done in an appropriate work space away from foot traffic and exposure to bystanders.
- Some components of the machine can be heavy or awkward. Use a second person when doing the assembly steps involving these parts. Do not do steps that involve heavy lifting or awkward movements on your own.
- Set up this machine on a solid, level, horizontal surface.
- Do not try to change the design or functionality of this machine. This could compromise the safety of this machine and will void the warranty.
- If replacement parts are necessary, use only genuine Nautilus replacement parts and hardware. Failure to use genuine replacement parts can cause a risk to users, keep the machine from operating correctly and void the warranty.
- Do not use until the machine has been fully assembled and inspected for correct performance in accordance with the Manual.
- Use this machine only for its intended use as described in this manual. Do not use attachments not recommended by the manufacturer.
- Do all assembly steps in the sequence given. Incorrect assembly can lead to injury or incorrect function.
- Connect this machine to a properly grounded outlet only.
- Keep the power cord away from heat sources and hot surfaces.
- Do not operate where aerosol products are being used.
- SAVE THESE INSTRUCTIONS.

Before using this equipment, obey the following warnings:

Read and understand the complete Manual. Keep the Manual for future reference.

Read and understand all Warnings on this machine. If at any time the Warning stickers become loose, unreadable or dislodged, replace the labels. If purchased in US/Canada, contact Customer Service for replacement labels. If purchased outside US/Canada, contact your local distributor for them.

- Children must not be let on or near to this machine. Moving parts and other features of the machine can be dangerous to children.
- Not intended for use by anyone under 14 years of age.
- Consult a physician before you start an exercise program. Stop exercising if you feel pain or tightness in your chest, become short of breath, or feel faint. Contact your doctor before you use the machine again. Use the values calculated or measured by the machine's computer for reference purposes only.
- Before each use, examine this machine for damage to power cord, power receptacle, loose parts or signs of wear. Do not use if found in this condition. Monitor the Handlebars, Pedals, and Crank Arms closely. If purchased in US/Canada, contact Customer Service for repair information. If purchased outside US/Canada, contact your local distributor for repair information.
- This appliance should only be used with the power supply unit provided, or a replacement power supply unit supplied from Nautilus, Inc.
- Maximum user weight limit: 136 kg. (300 lbs). Do not use if you are over this weight.
- This machine is for home use only. Do not place or use the machine in a commercial or institutional setting. This includes gyms, corporations, work places, clubs, fitness centers and any public or private entity that has a machine for use by its members, customers, employees or affiliates.
- Do not wear loose clothing or jewelry. This machine contains moving parts. Do not put fingers, feet, or other objects into moving parts of the exercise equipment.
- Always wear rubber soled athletic shoes when you use this machine. Do not use the machine with bare feet or only wearing socks.
- Set up and operate this machine on a solid, level, horizontal surface.
- Make the Foot Pedals stable before you step on them. Use caution when you step on and off the machine.
- Do not operate this machine outdoors or in moist or wet locations.
- Keep at least 0.6 m (24") on each side of the machine clear. This is the recommended safe distance for access and passage around and emergency dismounts from the machine. Keep third parties out of this space when machine is in use.
- Do not over exert yourself during exercise. Operate the machine in the manner described in this manual.
- Correctly adjust and safely engage all Positional Adjustment Devices. Make sure that the Adjustment Devices do not hit the user.
- Keep the Foot Pedals and Handlebars clean and dry.
- Perform all regular and periodic maintenance procedures recommended in the Owner's Manual.
- Do not drop or put objects into any opening of the machine.
- Keep power cord away from heat source and hot surfaces.
- Do not operate where aerosol products are being used.
- Exercise on this machine requires coordination and balance. Be sure to anticipate that changes in speed, incline angle and resistance level can occur during workouts, and be attentive in order to avoid loss of balance and possible injury.
- Use this machine only for its intended use as described in this manual. Do not use attachments not recommended by the manufacturer.
- This appliance is not intended for use by persons with reduced physical, sensory or mental capabilities, or lack of knowledge, unless they have been given supervision or instruction concerning use of the appliance by a person responsible for their safety. Keep children under the age of 14 away from this machine.
- Children should be supervised to ensure that they do not play with the appliance.

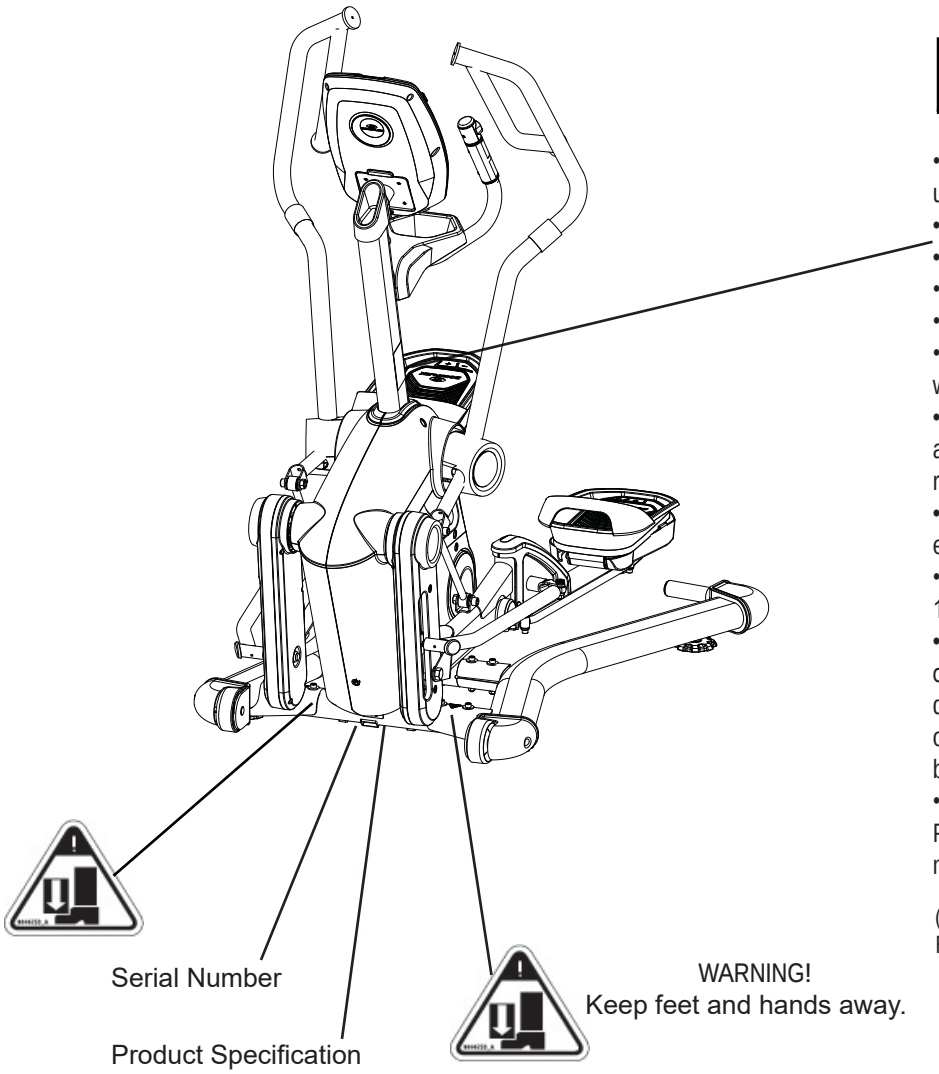

WARNING!

- Injury or death is possible if caution is not used while using this machine.
- Not intended for children under 14 yrs. of age.
- Keep children & pets away.
- Read and follow all warnings on this machine.
- This product is for Home use only.
- Refer to the owner's manual for additional warnings and safety information.
- Heart rate displayed, if applicable, is an approximation and should be used for reference only.
- Consult a physician prior to using any exercise equipment.
- The maximum user weight for this machine is: 136 kg/ 300lbs.
- Care should be used when mounting or dismounting the equipment. Before mounting or dismounting, move the pedal on the mounting or dismounting side to its lowest position and bring the machine to a complete stop.
- This unit is not equipped with a free-wheel. Pedal speed should be reduced in a controlled manner.

(The label on the product is available in English and French Canadian only.)

FCC Compliance

Changes or modifications to this unit not expressly approved by the party responsible for compliance could void the user's authority to operate the equipment.

The machine and power supply comply with Part 15 of the FCC rules. Operation is subject to the following two conditions: (1) This device may not cause harmful interference, and (2) this device must accept any interference received, including interference that may cause undesired operation.

Note: This machine and power supply have been tested and found to comply with the limits for a Class B digital device, pursuant to Part 15 of the FCC Rules. These limits are designed to provide reasonable protection against harmful interference in a residential installation. This equipment generates, uses and can radiate radio frequency energy and, if not installed and used in accordance with the instructions, may cause harmful interference to radio communications.

However, there is no guarantee that interference will not occur in a particular installation. If this equipment does cause harmful interference to radio or television reception, which can be determined by turning the equipment off and on, the user is encouraged to try to correct the interference by one or more of the following measures:

- Reorient or relocate the receiving antenna.
- Increase the separation between the equipment and receiver.
- Connect the equipment into an outlet on a circuit different from that to which the receiver is connected.
- Consult the dealer or an experienced radio/TV technician for help.

Maximum User Weight: 136 kg (300 lbs)

Maximum Pedal Height: 55.9 cm (22”)
Machine Weight: approx. 117 kg (258 lbs)
Total Surface Area (footprint) of equipment: 16,007 cm^2

Power Requirements:

Input Voltage:	100 - 240V AC, 50/60Hz
Output Voltage:	12VDC, 5A
Heart Rate Chest Strap:	1 CR2032 battery

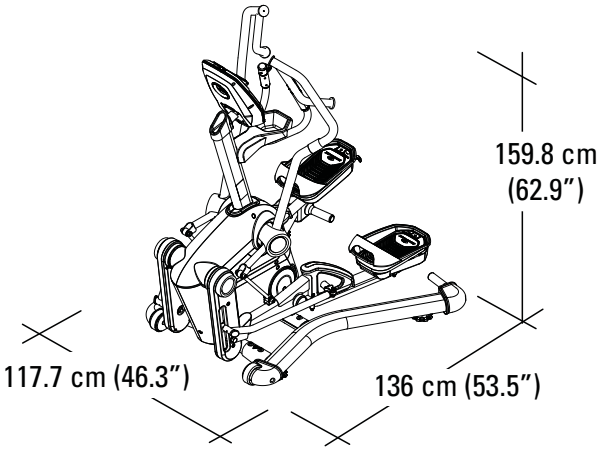

DO NOT dispose of this product as refuse. This product is to be recycled. For proper disposal of this product, please follow the prescribed methods at an approved waste center.

Before Assembly

Select the area where you are going to operate your machine and complete the assembly there. The width of the machine is wider than a standard room door frame. Disassembly may be required if transporting to a different area. For safe operation, the location must be on a hard, level surface. Allow a minimum workout area of 244 cm x 259 cm (96” x 102”). Be sure that the workout space you are utilizing has adequate height clearance, taking into consideration the height of the user and the maximum incline of the elliptical machine.

Basic Assembly

Follow these basic points when you assemble your machine:

- Read and understand the “Important Safety Instructions” before assembly.
- Collect all the pieces necessary for each assembly step.
- Using the recommended wrenches, turn the bolts and nuts to the right (clockwise) to tighten, and the left (counterclockwise) to loosen, unless instructed otherwise.
- When attaching 2 pieces, lightly lift and look through the bolt holes to help insert the bolt through the holes.
- The assembly requires 2 people.
- Do not use any power tools for assembly.

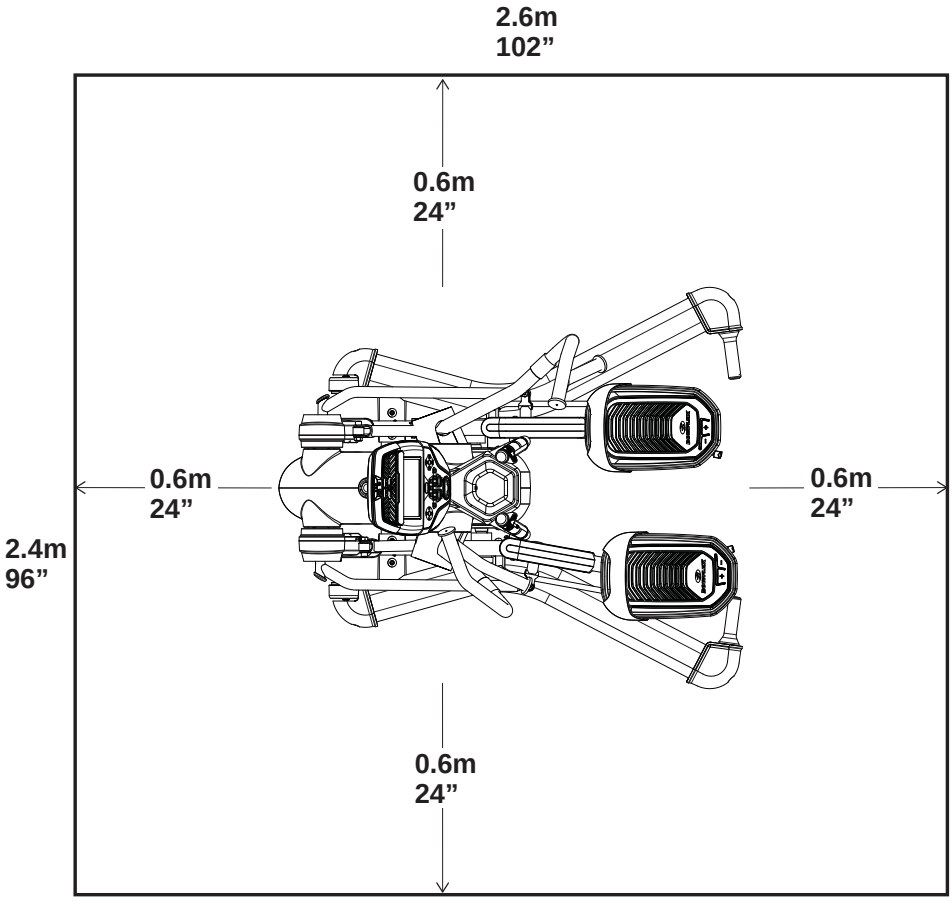

Machine Mat

The Bowflex™ Machine Mat is an optional accessory that helps keep your workout area clear and adds a layer of protection to your floor. The rubber machine mat provides a non-slip, rubber surface which limits static discharge and reduces the possibility of display errors. If possible, put your Bowflex™ Machine Mat in your selected workout area before you begin assembly.

To order the optional machine mat, go to: www.bowflex.com, or call 1 (800) 605–3369.

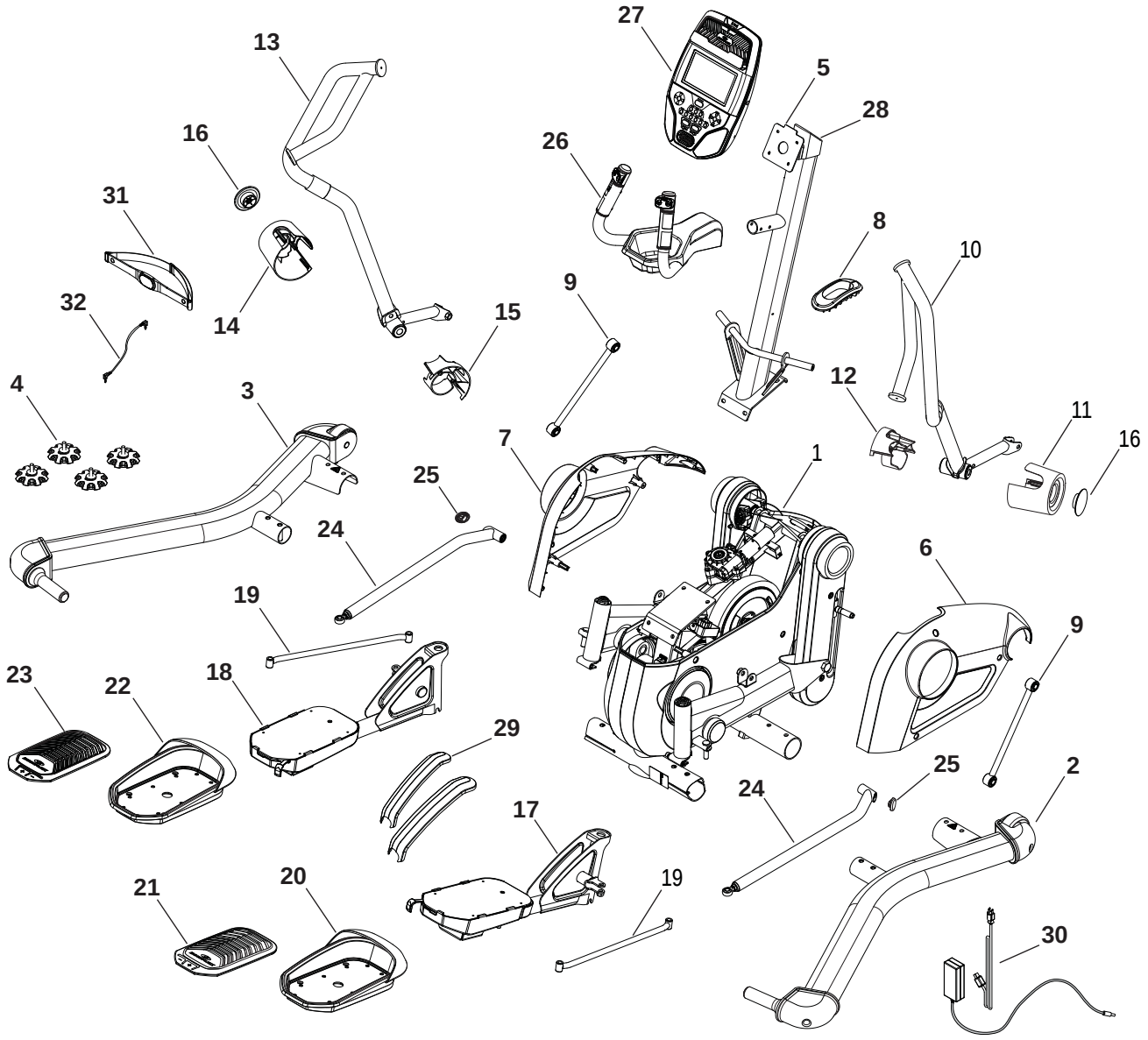

A right (“ **R** ”) and left (“ **L** ”) decal has been applied to some parts to assist with assembly.

Item	Qty	Description	Item	Qty	Description	Item	Qty	Description
1	1	Engine Assembly	12	1	Pivot Cover, Inside, Right	23	1	Foot Pad, Left
2	1	Base Assembly, Right	13	1	Handlebar Arm, Left	24	2	Lateral Link
3	1	Base Assembly, Left	14	1	Pivot Cover, Left	25	2	Lateral Link Endcap
4	4	Leveler Foot	15	1	Pivot Cover, Inside, Left	26	1	Static Handlebar
5	1	Console Mast	16	2	Pivot Bolt Cover	27	1	Console
6	1	Upper Shroud, Right	17	1	Pedal Arm, Right	28	1	Mast EndCap
7	1	Upper Shroud, Left	18	1	Pedal Arm, Left	29	2	Pedal Arm Topcap
8	1	Mast Gasket	19	2	Parallel Link	30	1	Power Adapter w/Cord
9	2	Handlebar Link	20	1	Pedal Shroud, Right	31	1	Chest Strap
10	1	Handlebar Arm, Right	21	1	Foot Pad, Right	32	1	Media Cable
11	1	Pivot Cover, Right	22	1	Pedal Shroud, Left			

Hardware / Tools

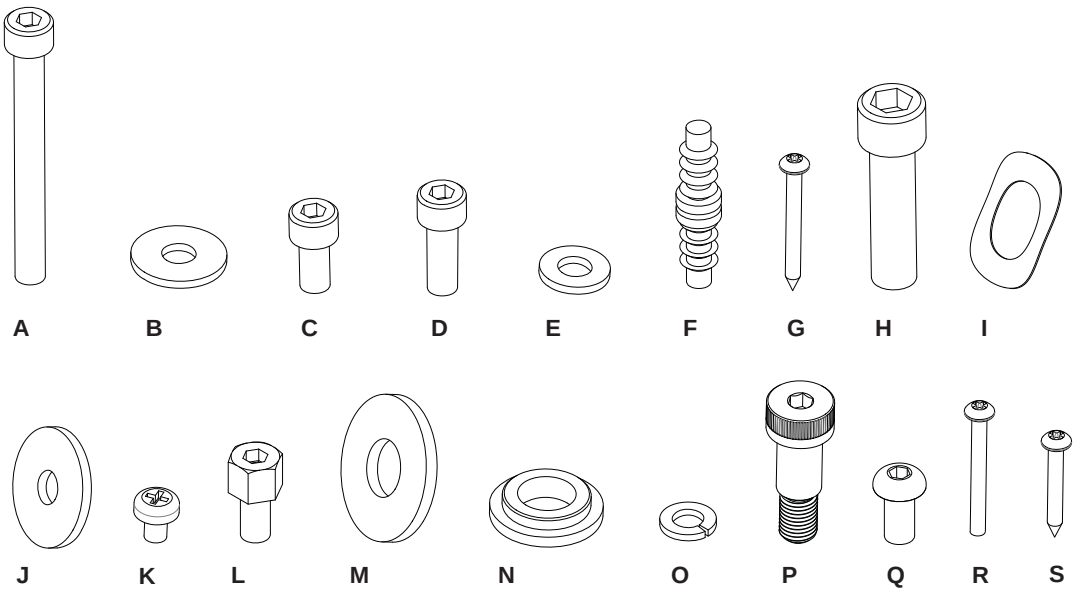

Item	Qty	Description	Item	Qty	Description
A	4	Socket Head Cap Screw, M8x75 w/Thread Lock	K	8	Screw, Pan Head Phillips M6x8
B	8	Flat Washer, M8 Regular	L	2	Pivot Bolt, M8x15
C	10	Socket Head Cap Screw, M8 x16 w/Thread Lock	M	2	Flat Washer, M14 Regular
D	10	Socket Head Cap Screw, M8 x25 w/Thread Lock	N	2	Collar, Upper Shaft Pedal Arm
E	12	Flat Washer, M8 Narrow	O	16	Spring Washer, M8
F	6	Push Fastener, 10mm x 50mm	P	2	Socket Head Cap Screw, Shoulder, M10 Thread
G	4	Screw, M4x40 Self Threading	Q	4	Socket Button Head Cap Screw, M8x16
H	4	Socket Head Cap Screw, M12x45 w/Thread Lock	R	2	Screw, M4x40
I	2	Wave Washer, M20	S	4	Screw, M4x25 Self Threading
J	4	Flat Washer, M8 Wide			

Note: Select pieces of Hardware have been provided as spares on the Hardware Card. Be aware that there may be remaining Hardware after the proper assembly of your machine.

Tools

Included

6mm
#2

10mm

Not Included

(recommended)

Some components of the machine can be heavy or awkward. Use a second person when unboxing the machine. Do not do steps that involve heavy lifting or awkward movements on your own.

Note: The Unboxing instructions are in the Quick Start Manual. Remove the Manual from Box 3. Box 2 contains the Engine Assembly and a few smaller parts.

1. Carefully Turn Box 2 on Long Side and Cut the Packing Tape on the Bottom of the Box

This step requires two people.

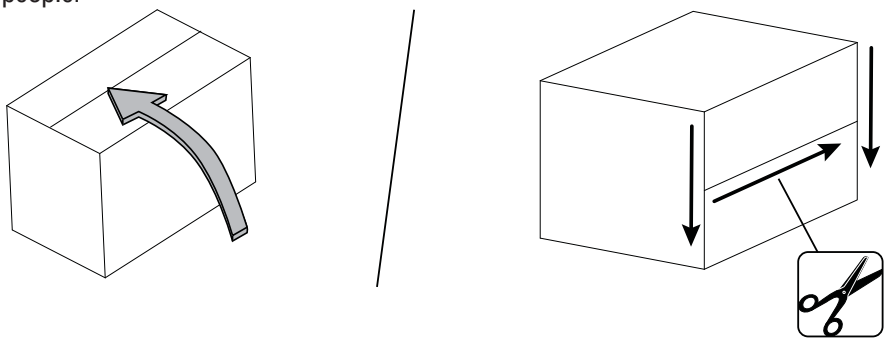

2. Fold the Flaps Out to Expose the Shipping Platform and Tip the Box Upright

This step requires two people.

Note: Be sure to fold the bottom flap under the Box so that the shipping platform will rest on the floor.

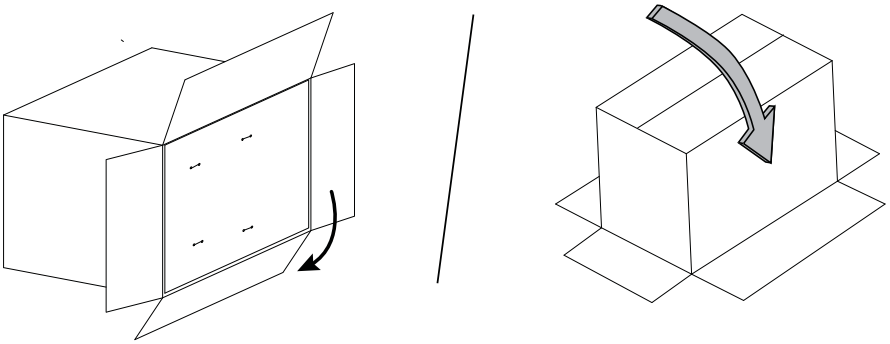

3. Lift the Box off the Contents

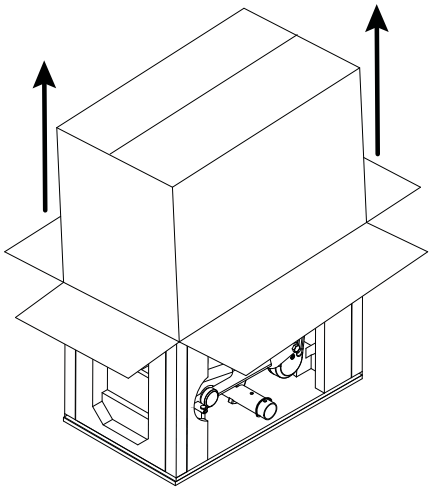

4. Remove the Packaging Material Around the Parts

Note: Remove the cardboard tubes before removing the plastic foam. Be aware that parts are embedded in the foam packaging.

5. Cut the Zipties that Attach the Engine Assembly to the Shipping Platform

NOTICE: Do not remove the platform until the Base Assemblies are attached in order to prevent damage to the floor.

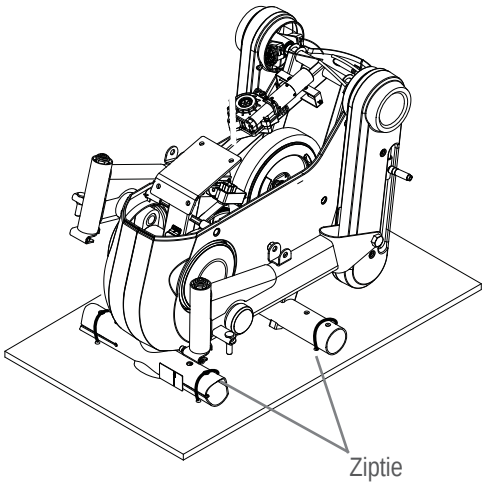

⚠ Some components of the machine can be heavy or awkward. Use a second person when doing the assembly steps involving these parts. Do not do steps that involve heavy lifting or awkward movements on your own.

1. Install Levelers on the Base Assemblies and Install Base Assemblies to the Engine Assembly

Install the Levelers on the Base Assemblies before installing the Base Assemblies to the Engine Assembly.

Note: A right (“ R ”) and left (“ L ”) decal has been applied to some parts to assist with assembly.

Install the Base Assemblies one at a time. Tilt the Engine Assembly to the side and slide the correct Base Assembly into position and install the hardware. It may be helpful to put a static solid object (like a book or box) under the front tube to align the screws and holes.

Be sure to *FULLY* **tighten hardware with hex wrench when all hardware has been finger tightened.** Remove the shipping platform and set it safely aside.

⚠ In order to avoid possible serious injury, when installing the Base Assemblies to the Engine Assembly**, be careful to avoid fingers** or hands being caught or pinched.

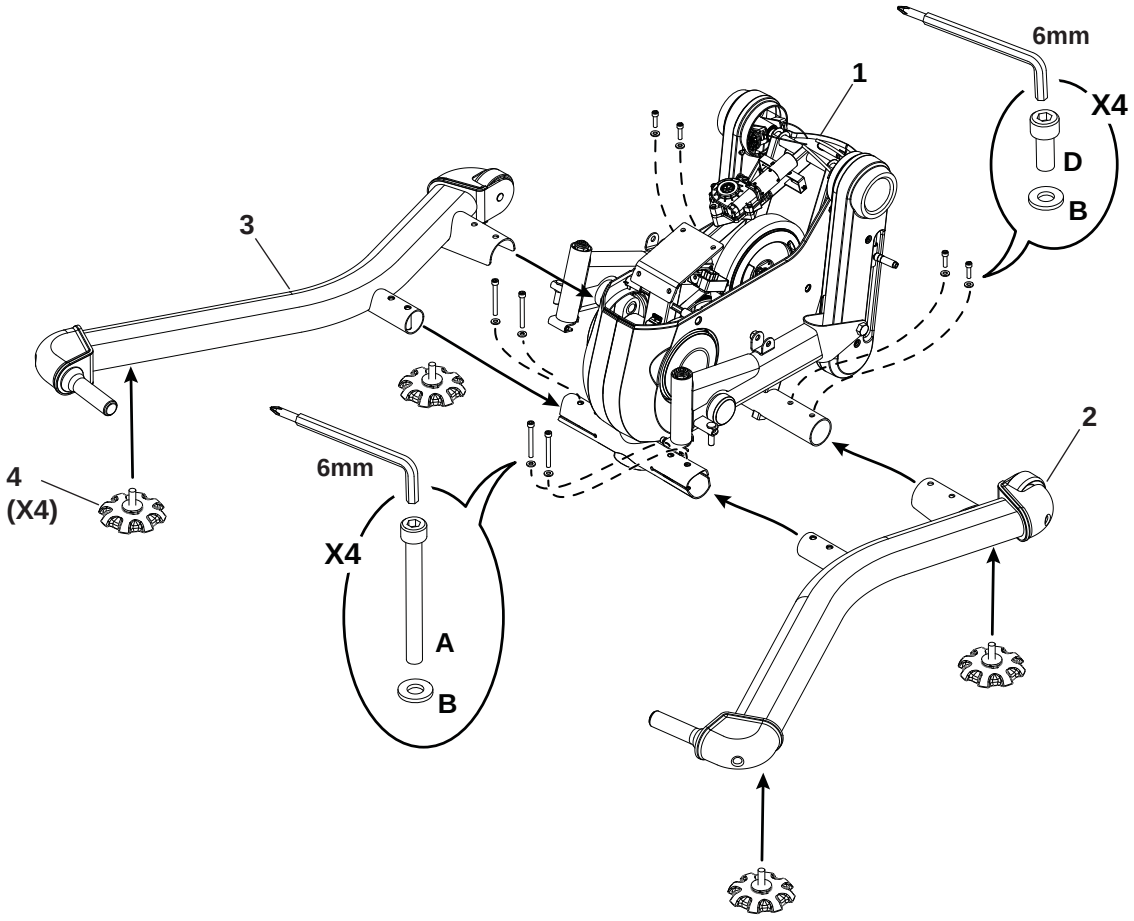

2. Install Console Mast to Frame Assembly

Note: Attach the Console Mast to the base mount and connect the base cables to the mast cables. Do not fully tighten until all hardware has been installed.

NOTICE: Verify the cable connections to be sure that they are connected correctly so that the locking tabs are aligned and engaged. If the cable connections are reversed, the Console will not turn on or the Static Handlebar buttons will not work. Do not crimp the Cables.

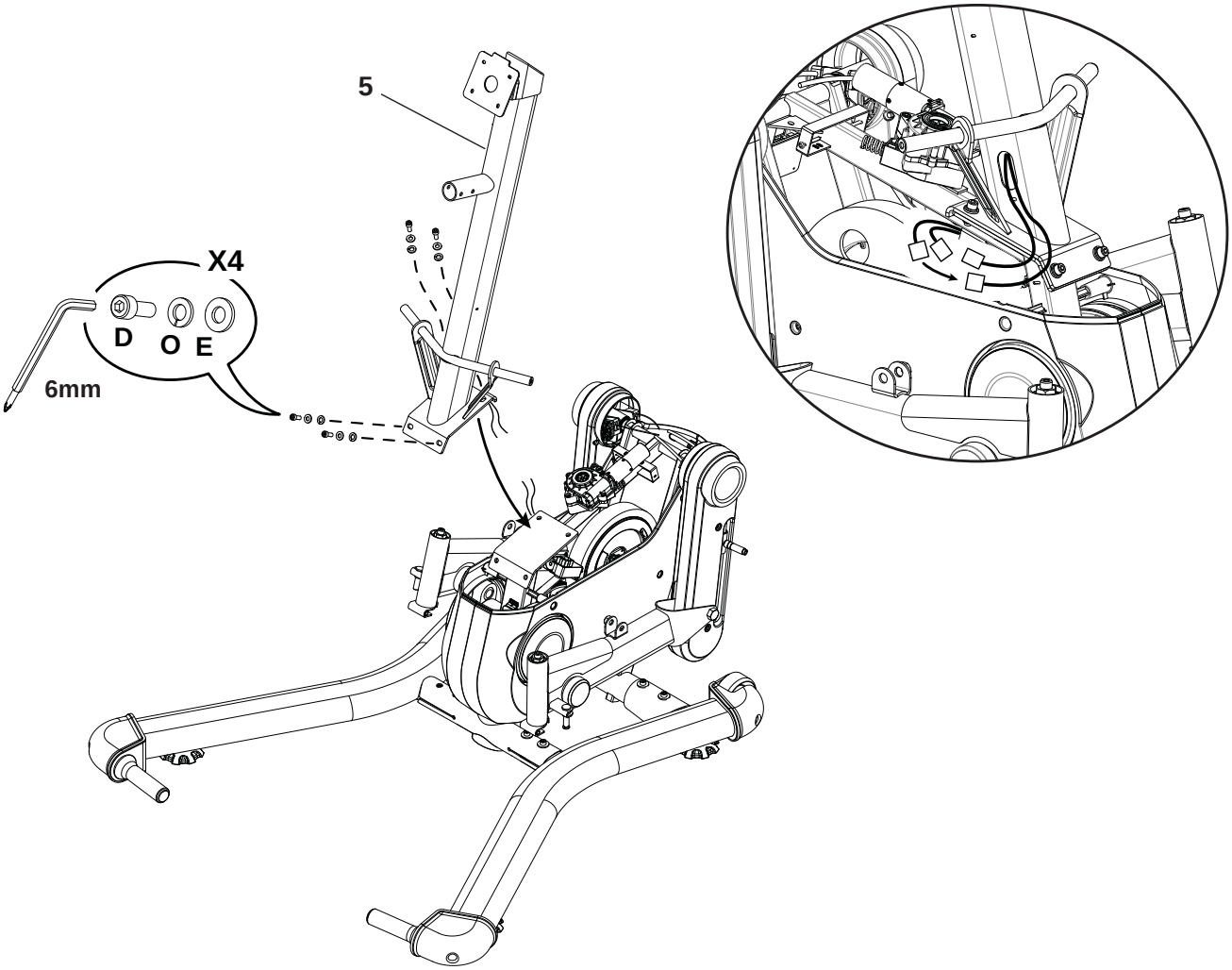

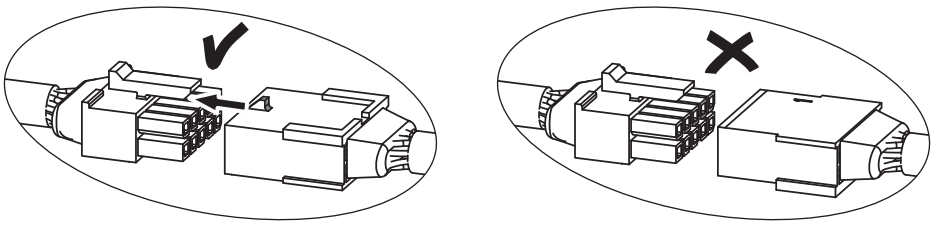

3. Attach the Shrouds and Mast Gasket to Frame Assembly

Insert the Push Fasteners (F) in the mount holes in the Left Shroud. Put the Left Shroud in position. Align the Right Shroud with the Push Fasteners and move the Right Shroud into position. Push the Shrouds together so that the Push Fasteners are fully seated. Install the Shrouds to the Frame Assembly with the screws (R, S).

NOTICE: Do not crimp the Cables.

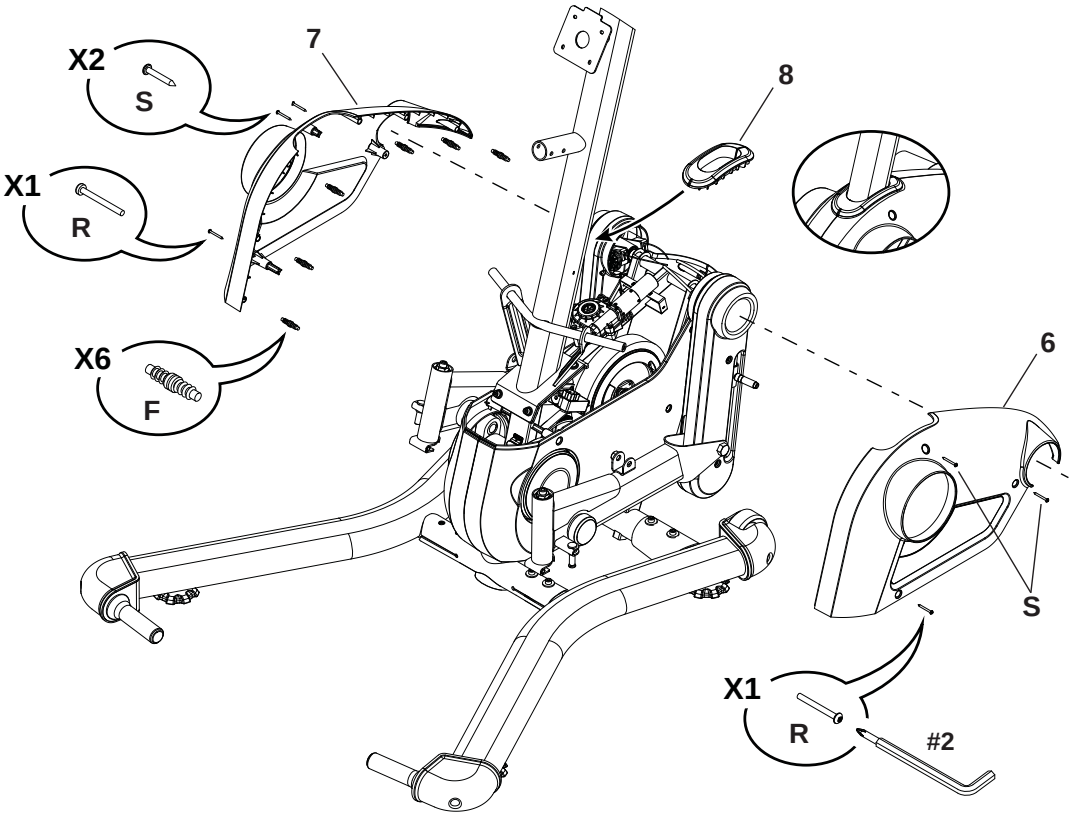

4. Attach Handlebar Links to Crank Arms

Note: Finger tighten the screws at this time.

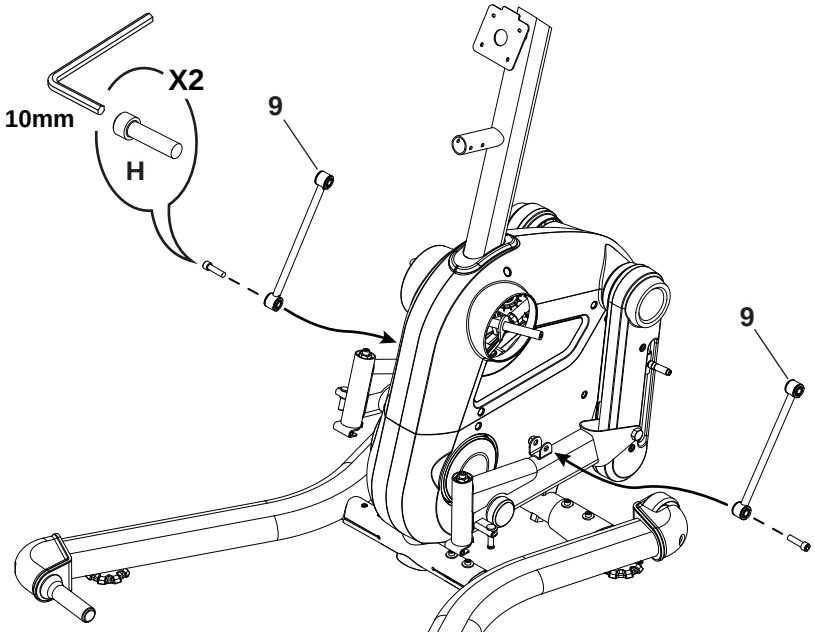

5. Attach Pivot Covers to Handlebar Arms, and Install Handlebar Arms

NOTICE: A right (" R ") and left (" L ") decal have been applied to some parts to assist with assembly. When attaching the Handlebar Pivot Shrouds to the Handlebar Arms, do not over-tighten the screws as this can damage the Shrouds.

1. While holding the Pivot Cover on the Handlebar Arm junction, place the Inside Pivot Cover on the opposite side of the handlebar and attach with 2 screws (G). Installation of the Left Pivot Cover on the Left Handlebar Arm (13) is shown in detail 5a.

The procedure is the same for the Right Handlebar Arm (10).

5a

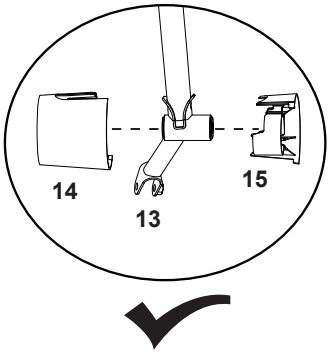

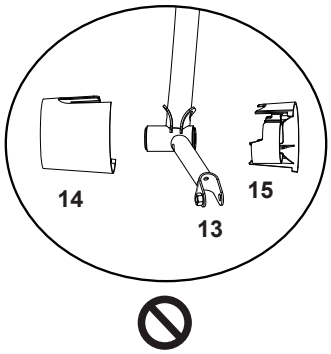

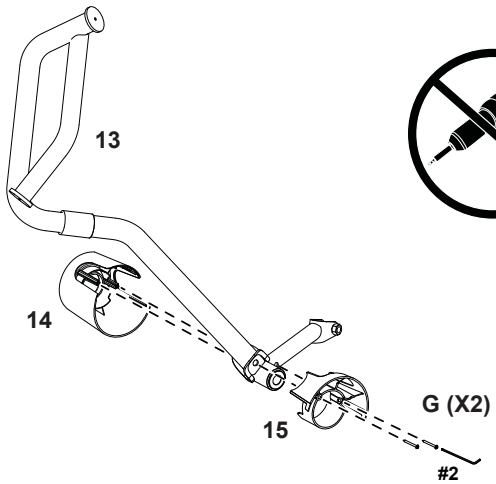

2. Be sure the Handlebar Link (9) is tilted forward. Put the wave washer (I) on the pivot rod. Align the Handlebar Arm assembly with the pivot rod and attach the lower Handlebar Arm to the Handlebar Link. Slide the Handlebar Arm assembly fully onto the pivot rod and install the hardware.

⚠ Be aware that the Handlebars are top heavy, and will want to pivot when attached onto the Pivot Rod. Be sure to stay out of the path of the Handlebar and to gently allow it to pivot to a rest.

FULLY tighten the screws (H1) from Step 4.

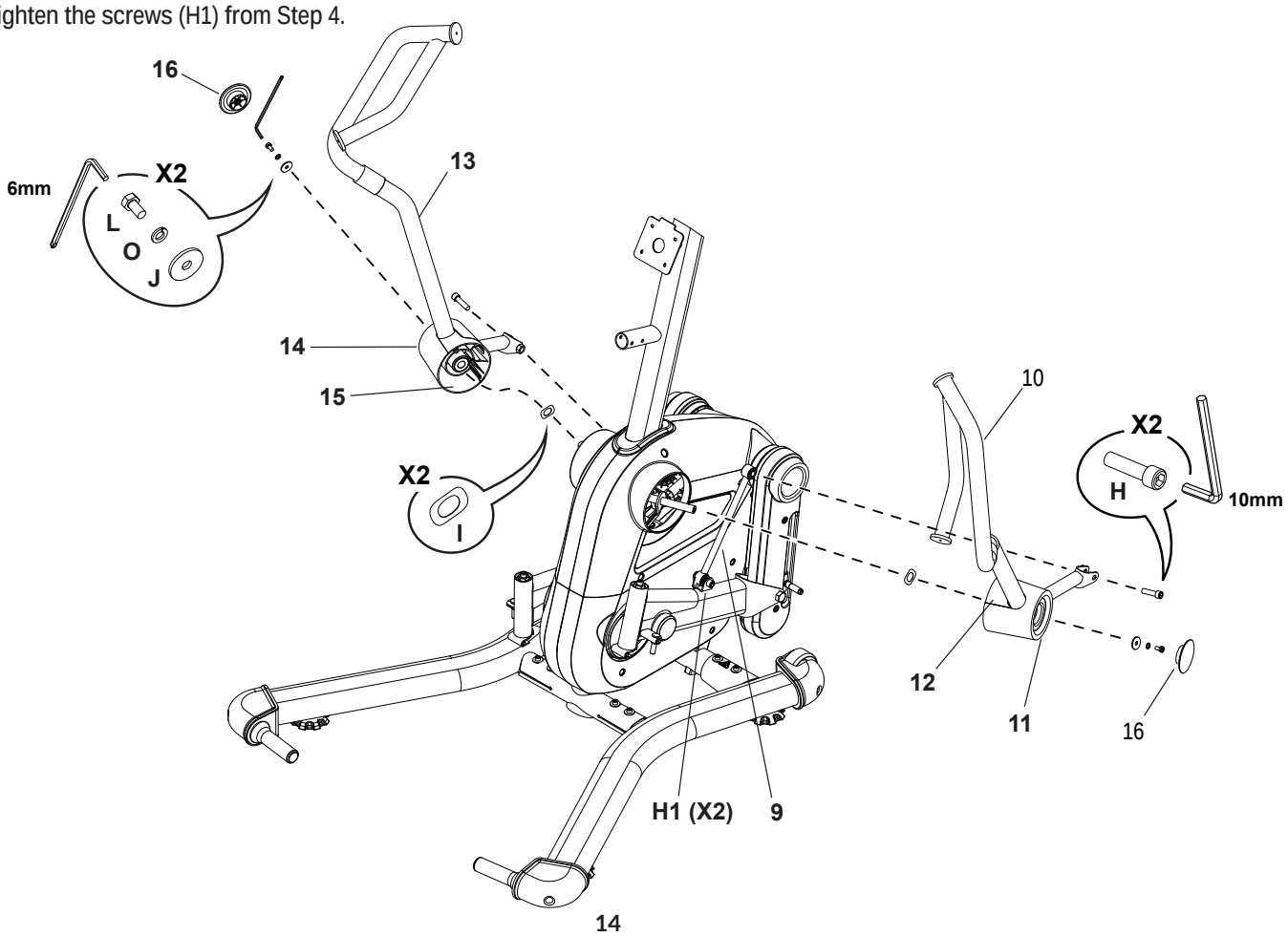

6. Attach Pedal Arms to Crank Arms

Note: A right (“ R ”) and left (“ L ”) decal have been applied to some parts to assist with assembly.

In order to avoid possible serious injury, when putting the Pedal Arm on the Crank Arms, be careful to avoid fingers or hands being caught or pinched.

Be sure to install hardware and parts in the correct order to ensure smooth, quiet operation of the machine.

1. Put the Collar (N) on the hardware insert on the Crank Arm. Do NOT install other washers at this time.

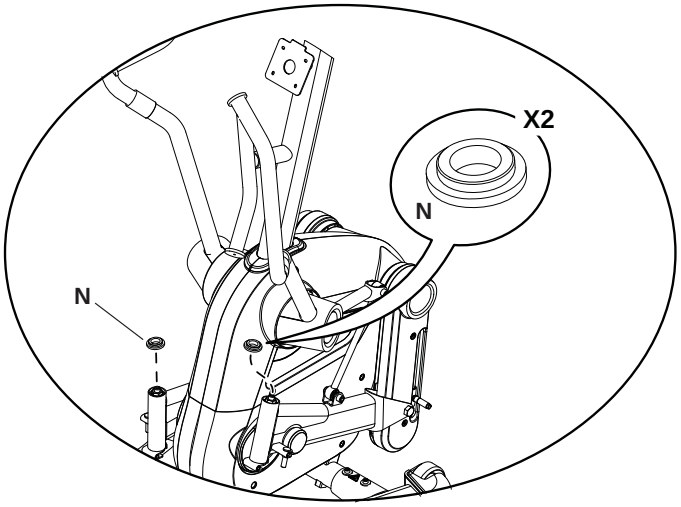

2. Lower the Pedal Arm onto the Collar, and slide the Pedal Arm into the under bracket (1a). Push down and hold the Pedal Arm in order to fully seat the Pedal Arm on the Collar.

Note: Make sure the Pedal Arm is seated over the Collar. Top of Collar should be visible in the hole on the Pedal Arm, flush with the hole.

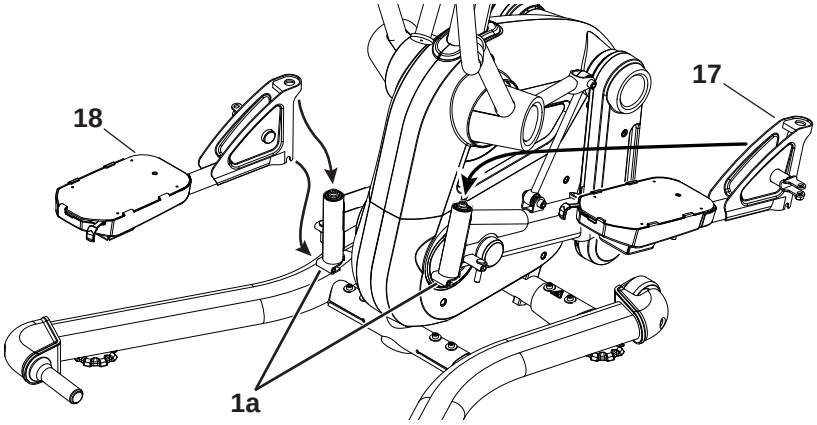

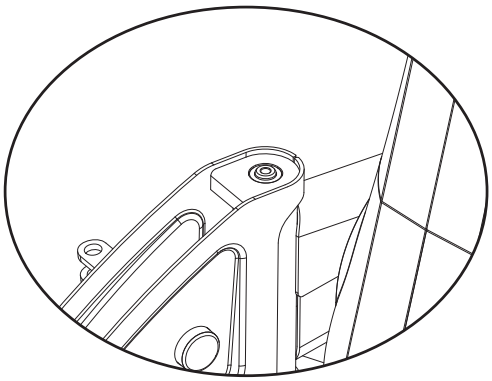

3. AFTER the Pedal Arm is in position, place the large washer (M, large hole) on top of the hole in the Pedal Arm. Then place the wide washer (J, small hole) on top of the large washer (M).

4. Install the screw (C) through the washers (J, M) and Pedal Arm, finger tight only.

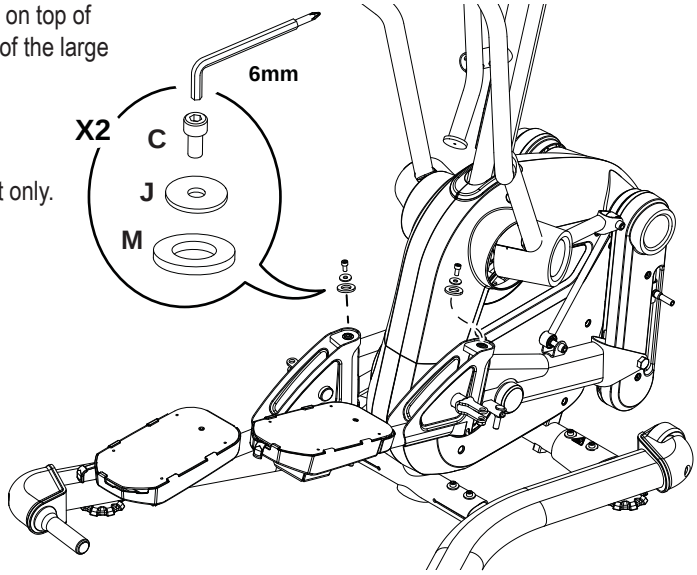

5. Install the screws (Q) and washers (E) into the Pedal Arm and under bracket (1a), finger tight only.

6. Fully tighten screw C.

7. Fully tighten screws Q.

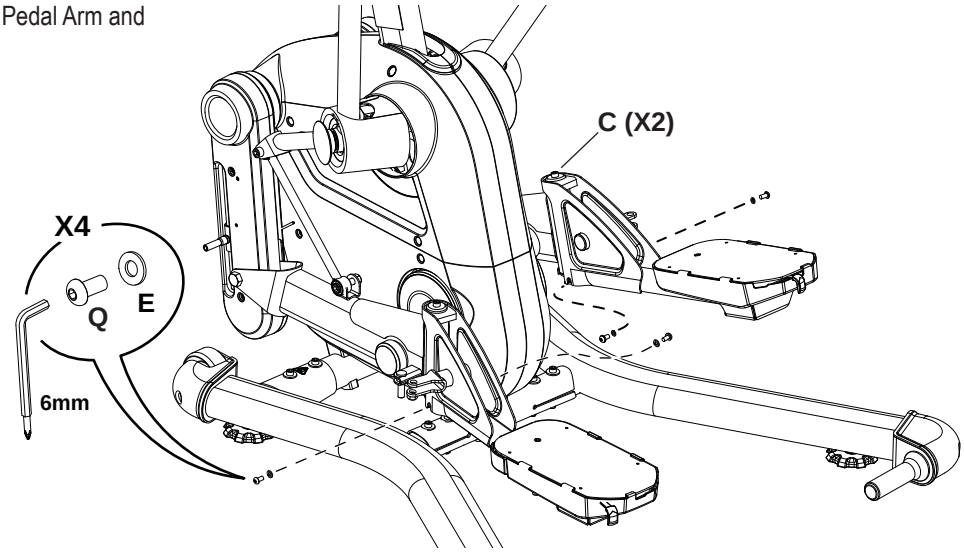

8. Attach the Topcap to the Pedal Arm.

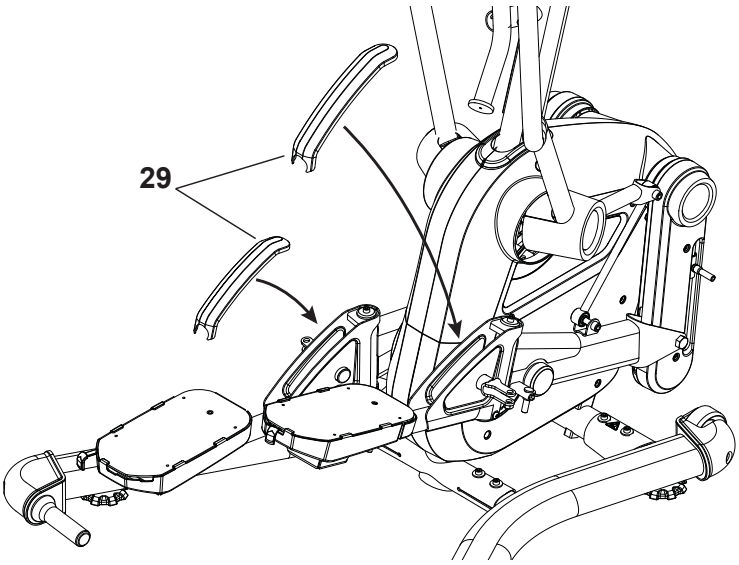

7. Attach the Parallel Links to Pedal Arms and Crank Arms

Note: Attach Parallel Link to bottom of Pedal and the side bracket on the Crank Arm. Fully tighten the hardware.

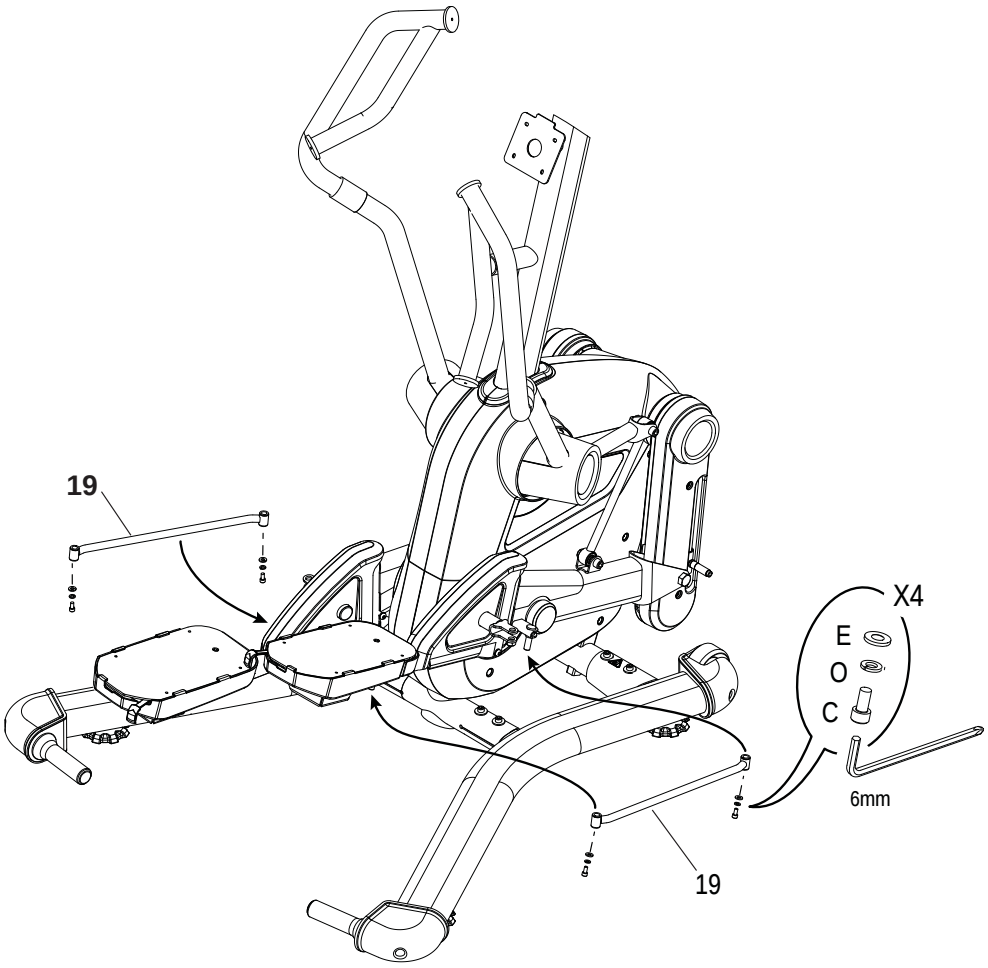

8. Attach the Pedal Shrouds and Footpads to Pedal Arms

Note: Fully tighten the hardware.

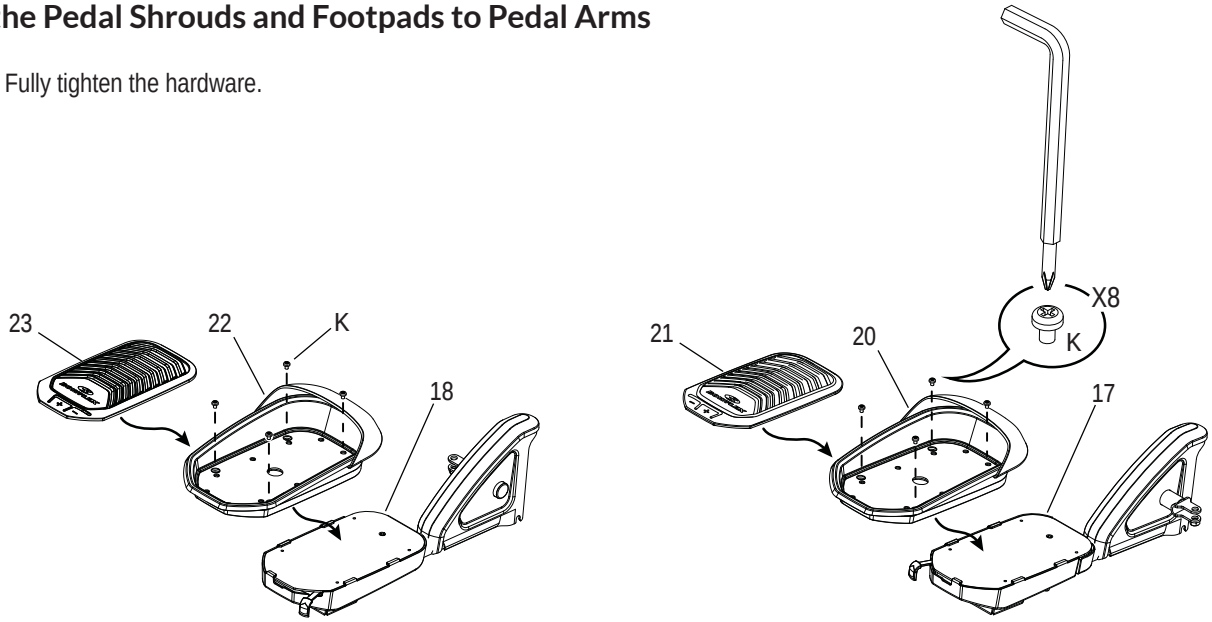

9. Attach Lateral Links to Crank Arms and then Pedal Arms

NOTICE: **1.** Attach Lateral Links to Crank Arms. Finger tighten the screws.

2. Attach Lateral Links to Pedal Arms.

3. Fully tighten the hardware.

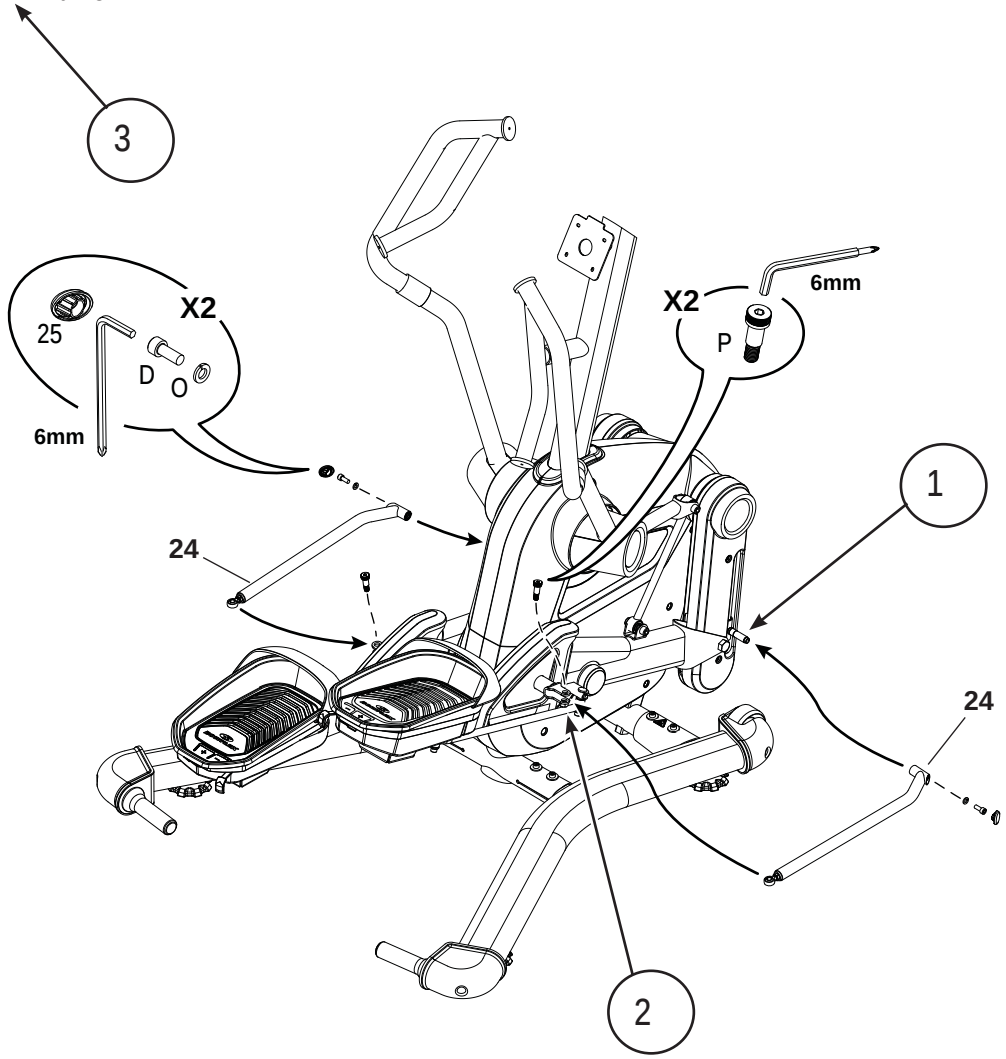

10. Install Static Handlebar to Console Mast

NOTICE: Do not crimp the Cables.

Note: Remove rubberbands from the cables. Connect the cables from the Static Handlebar to the cables from the mount tube on the back of the Console Mast. The 2 smallest cable connections are interchangeable—each Handlebar cable connector can connect to either one of the Mast cable connectors. Slide the Static Handlebar onto the mount tube and install the hardware.

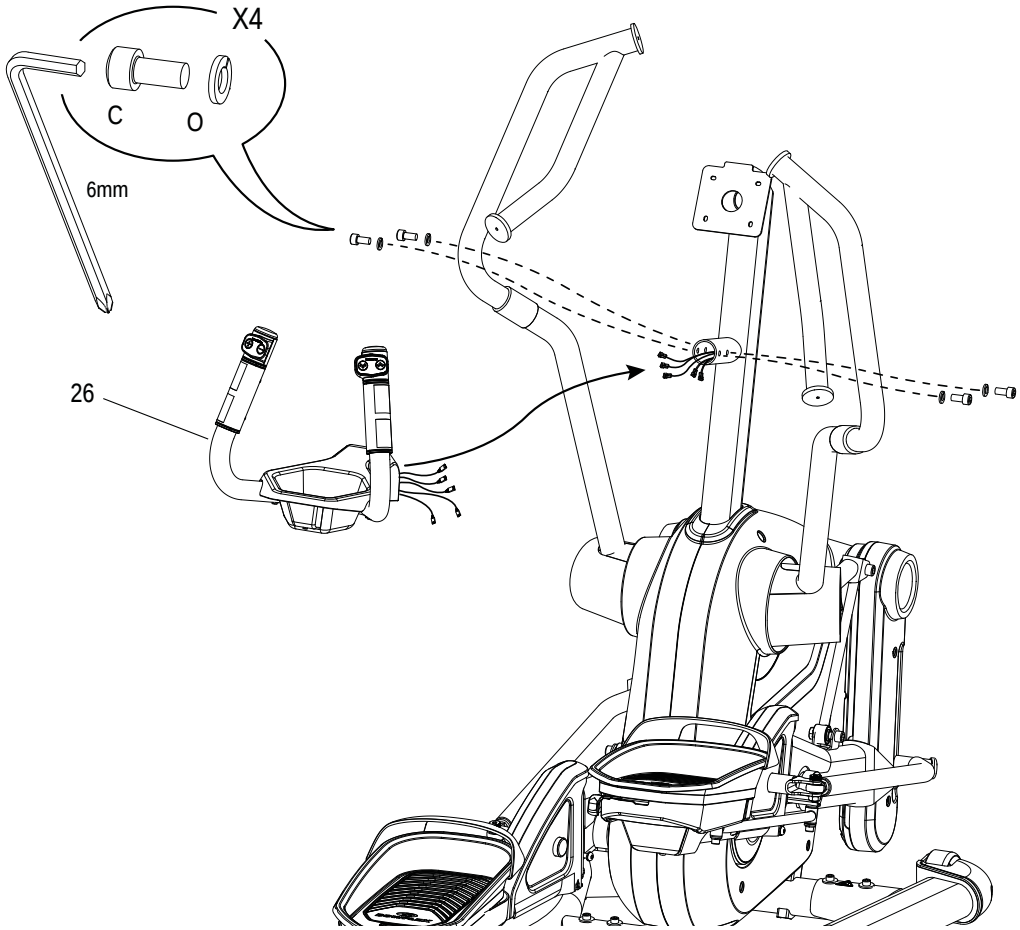

11. Remove the Hardware from the Console

NOTICE: Do not crimp the Cables.

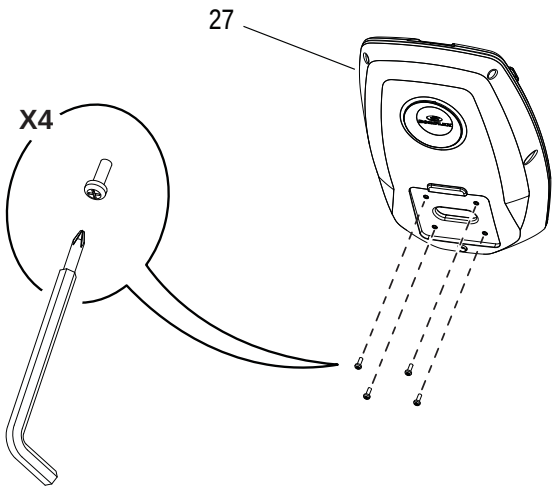

12. Route Console Cables through Mounting Plate and Attach the Console

NOTICE: Do not crimp the Cables. If the Mast Cables are routed through the Mounting Plate on the Console Mast, pull them back through the opening. Make sure the Mast Cable connectors do not fall into the Console Mast.

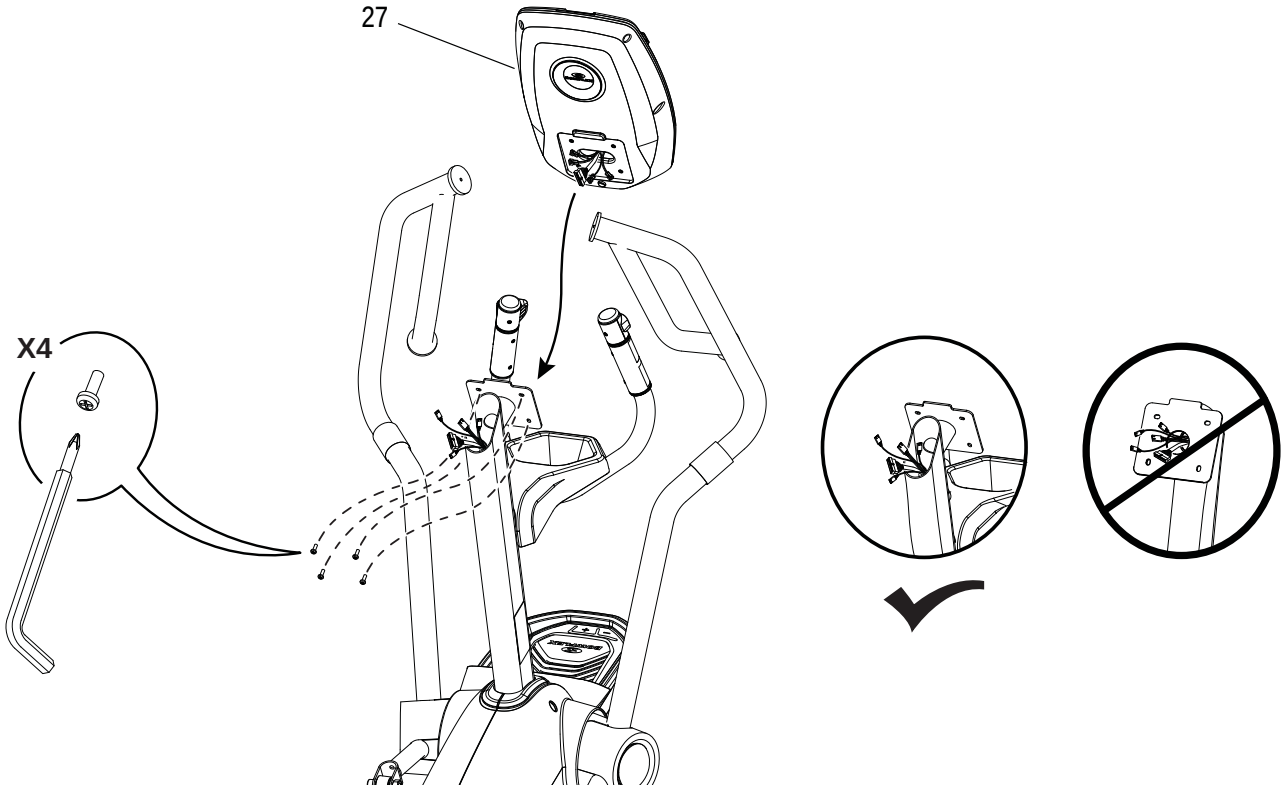

13. Connect the Console Cables to Mast Cables and Attach the Mast End Cap

NOTICE: Do not crimp the Cables. Make sure to connect all cables. Each connector end can only be connnected to the matching connector. Push the excess cable length down into the Console Mast.

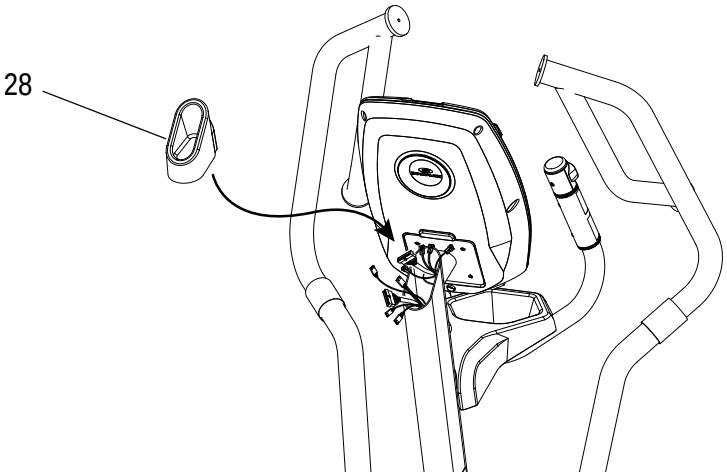

14. Connect the Power Adapter to the Power Cord, and Connect to Frame Assembly

NOTICE: Make sure that the Power Adapter wire and Power Cord stay clear of all moving parts.

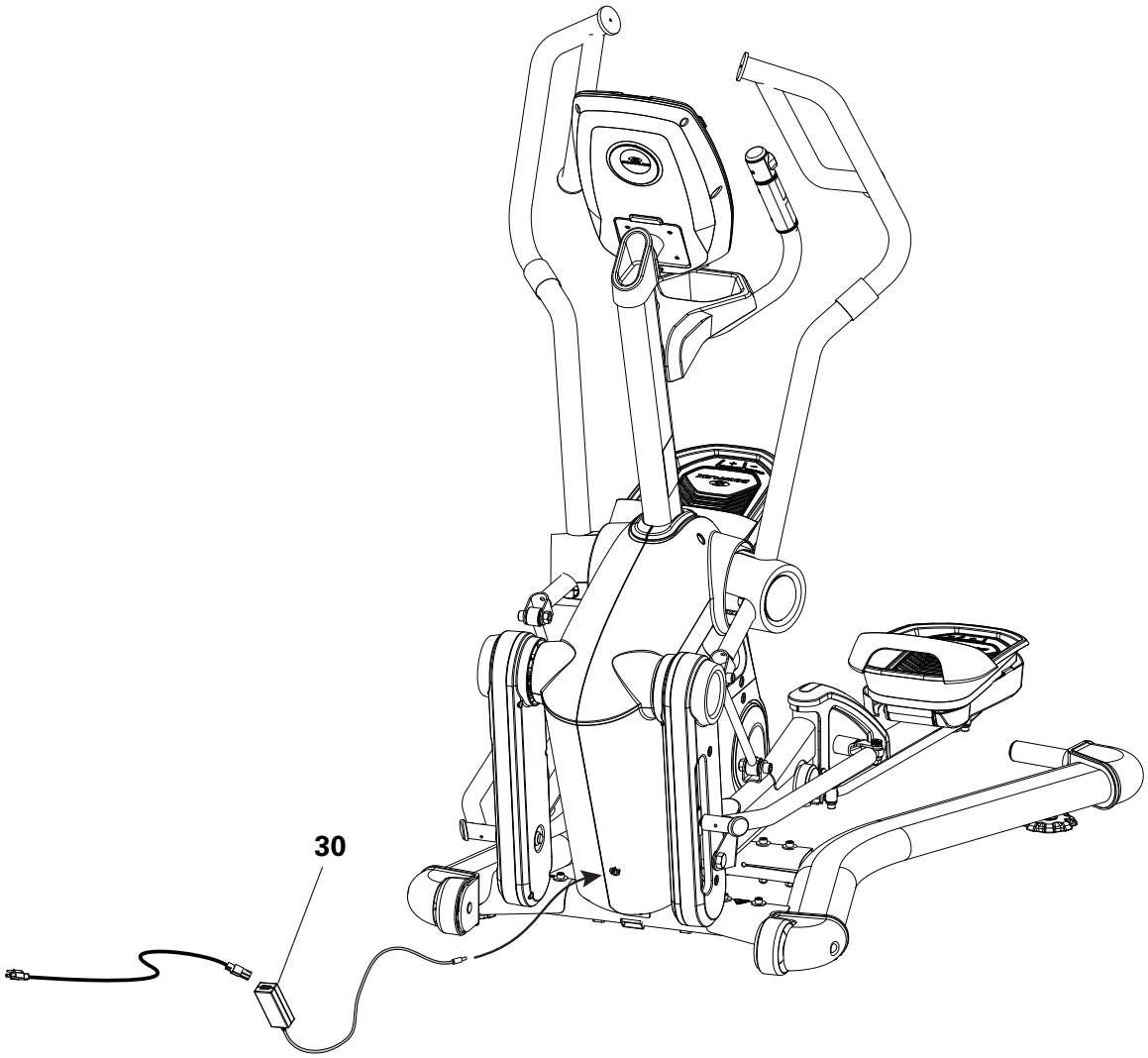

15. Final Inspection

Inspect your machine to ensure that all fasteners are tight and components are properly assembled. Inspect Pedals to confirm that the Pedal Suspension option is set to the same position for both Pedals.

Note: Remove any protective covers from the face of the Console. If there is protective plastic film on the Contact Heart Rate Sensors on the Static Handlebar, remove the plastic film.

Be sure to record the serial number in the field provided at the front of this manual.

⚠ Do not use until the machine has been fully assembled and inspected for correct performance in accordance with the Owner's Manual.

Moving Your Machine

The fitness machine weighs approximately 258 lbs (117 kg) when fully assembled and requires caution when being moved.

NOTICE: Always disconnect the power cord and power adapter from the wall outlet and the machine before attempting to move the machine.

Use the Transport Handles at the rear of the machine to lift and move the machine. Your machine can be rolled on the transport wheels to a new location. Lower your machine slowly into its new location without injury to your head or fingers.

Do not use the handlebars, Console Mast, or the Console to lift or move the machine. Injury to you or damage to the machine can occur.

The machine may be moved by one or more persons depending on their physical abilities and capacities. Make sure that you and others **are all physically fit and able to move the machine safely.**

Place the machine on a clean, hard, level surface, free from unwanted material or other objects that may hamper your ability to move freely. A rubber mat should be used below the machine to prevent the **release of static electricity and protect your flooring.**

To prevent unsupervised operation of the machine always disconnect the power cord from the wall outlet and machine power input. Place the power cord in a secure location.

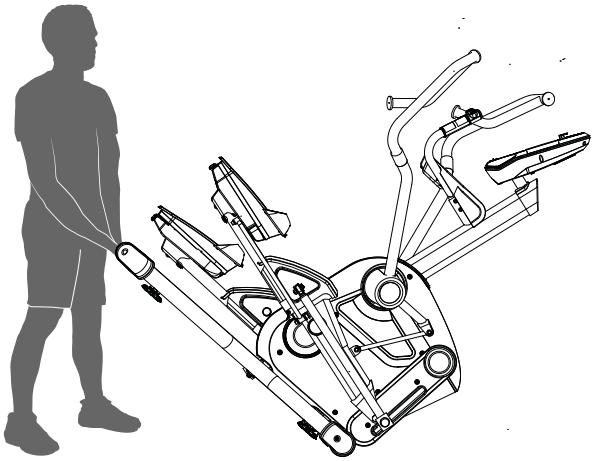

Leveling the Machine

The machine needs to be leveled if your workout area is uneven or if the Base Assembly is slightly off the floor. To adjust:

1. Place the machine in your workout area.
2. Loosen the locking nuts and adjust the levelers until they all contact the floor.

Do not adjust the levelers to such a height that they detach or unscrew from the machine. Injury to you or damage to the machine can occur.

3. Adjust until the machine is level. Tighten the locking nuts.

Make sure the machine is level and stable before you exercise.

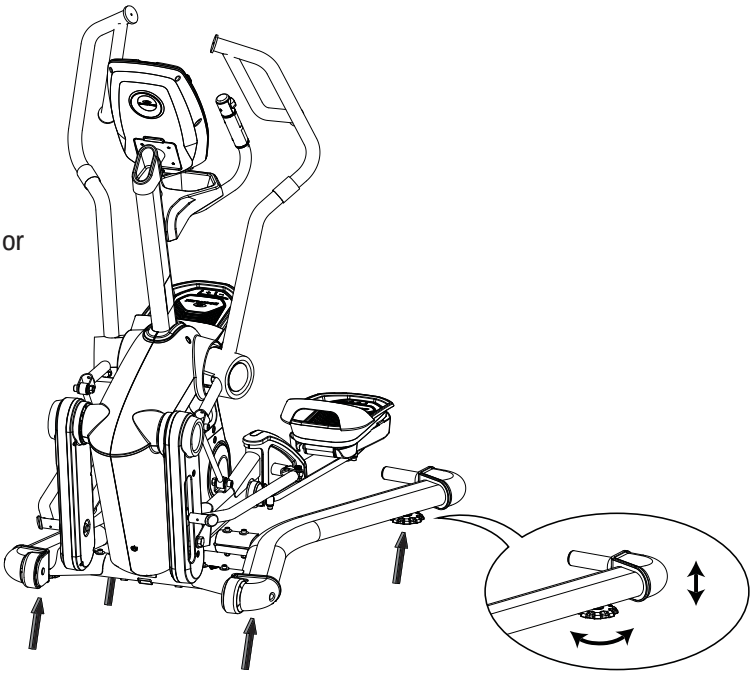

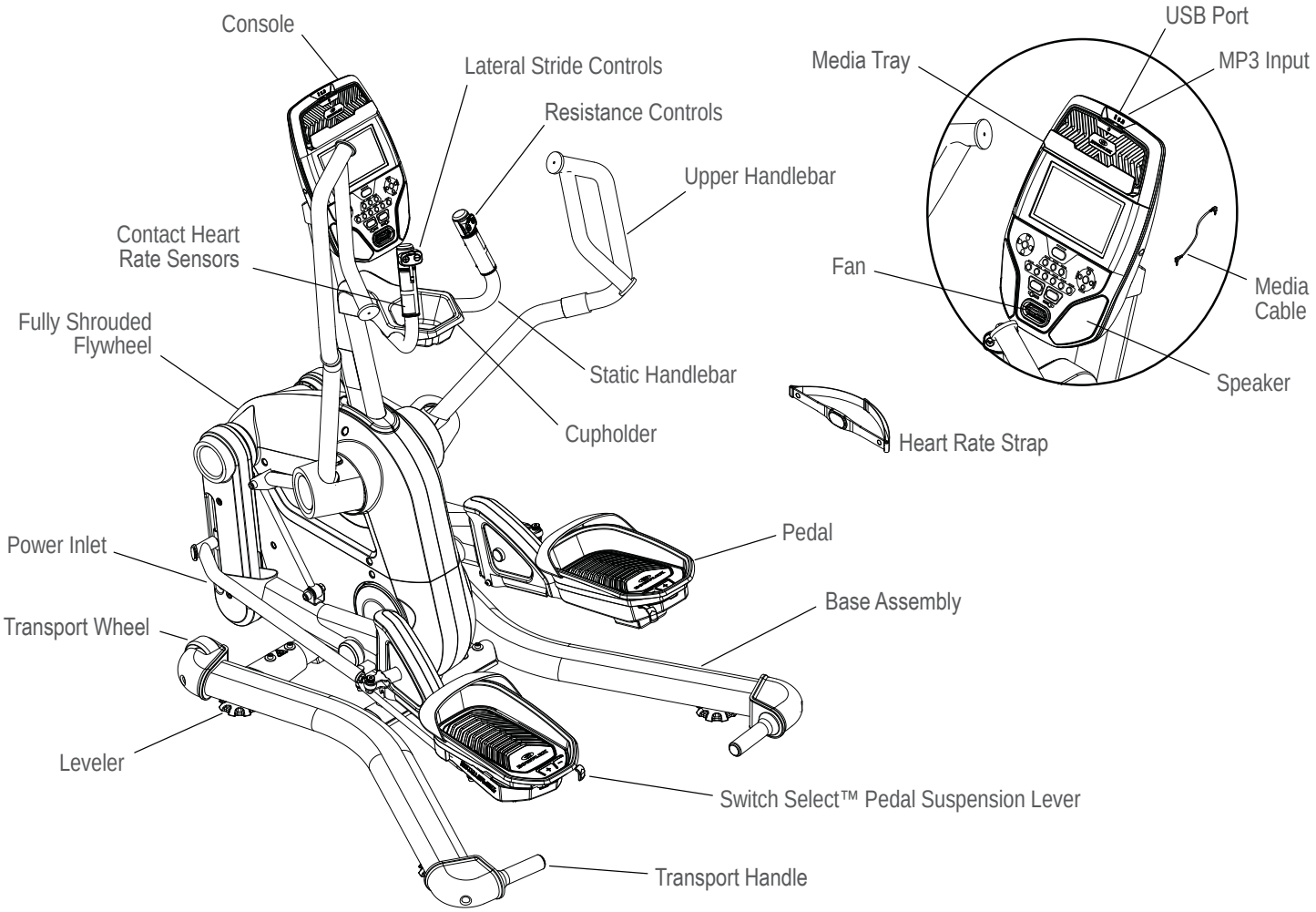

⚠ WARNING Use the values calculated or measured by the machine's computer for reference purposes only. The heart rate **displayed is an approximation and should be used for reference only. Over exercising may result in serious injury or death. If you feel faint stop exercising immediately.**

Console

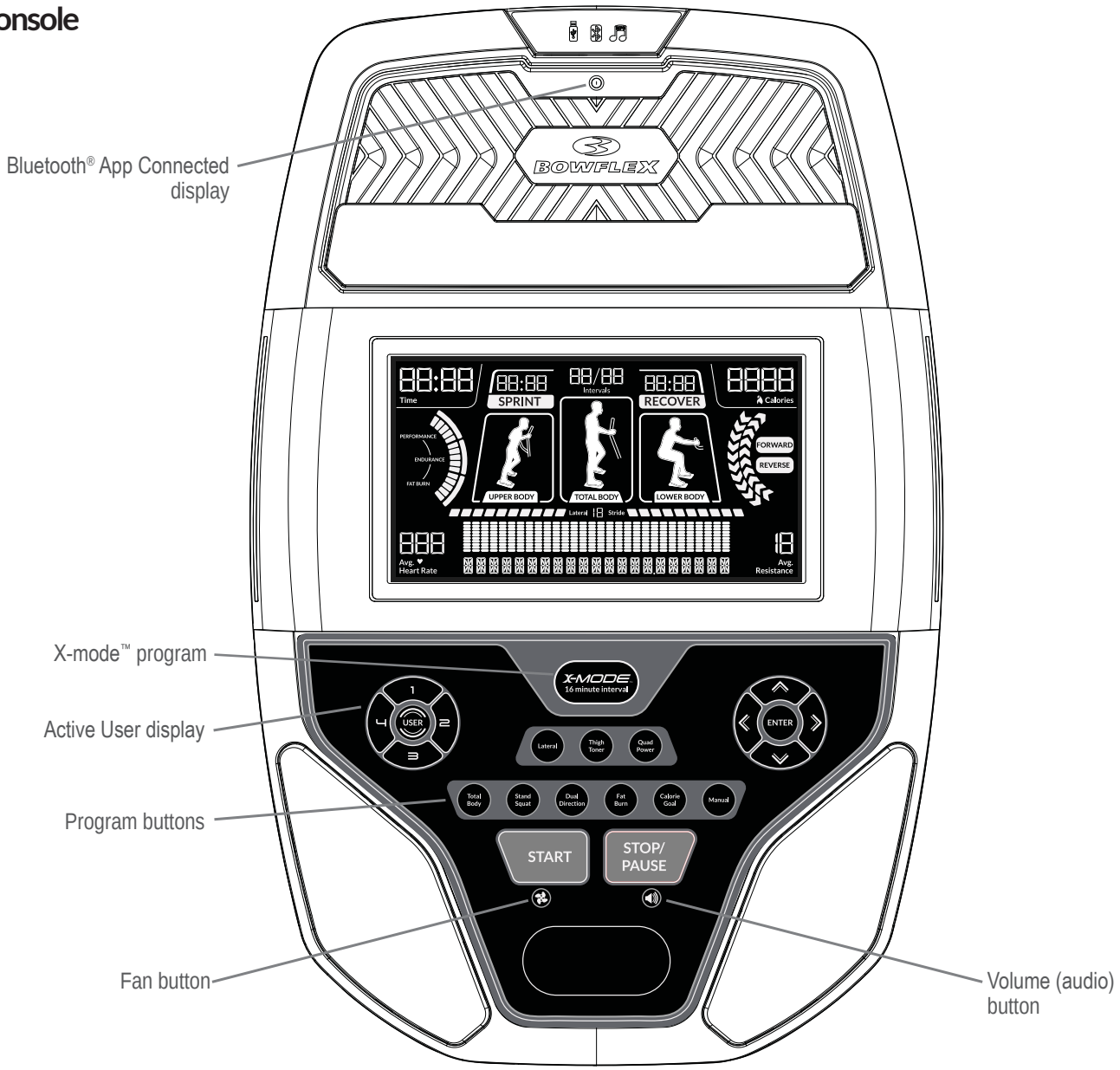

Bluetooth® App Connected display
Display shows when the machine is paired with the App.

Active User display
The Active User display shows the selected user profile. A user profile is always selected. From a power up, the last User will be the default User.

User button
Push to select the desired User Profile, push and hold for 3 seconds to edit the selected User Profile.

X-mode™ button
Push to select the X-mode™ 16 minute interval program.

Increase (▲) / Decrease (▼) buttons
The Increase / Decrease buttons change a value, or move through options. A button will light up to indicate it is an available option.

ENTER button
Confirms information or a selection.

Left (◄) / Right (►) buttons
Push to shift the currently active segment. A button will light up to indicate it is an available option.

Program buttons
Push to select one of the workout Programs. The illuminated light around the button shows the currently selected program. A Workout Program is always selected.

START button
Push to start the currently selected workout Program, or resume a paused workout.

STOP/PAUSE button
Push to pause a workout, exit the User Profile or Machine Settings mode, or end a paused workout.

Volume button
The Volume button sets the sound level of the Console, and the indicator lights show the current setting: low (1 LED), medium (2 LEDs), high (3 LEDs), or off (no LEDs). It does not affect the output from the headphone jack.

Fan button
Controls 4-speed fan (off, high, medium, low).

Console Display

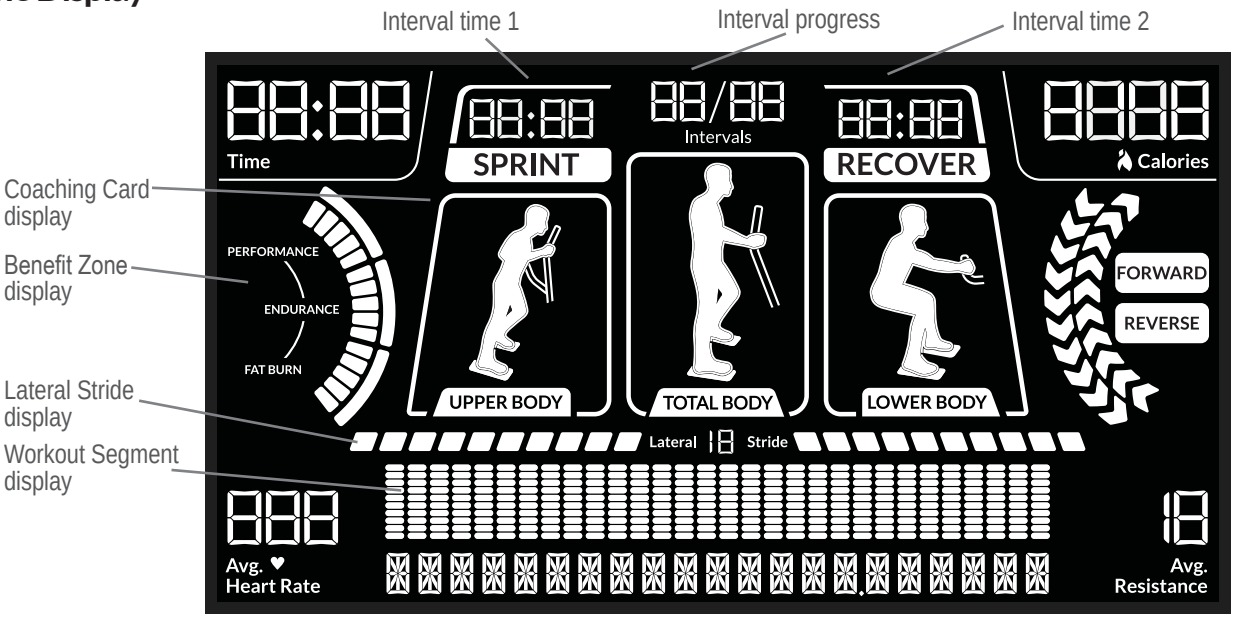

Time display
For programs with a set time duration, the Time display counts down in minutes and seconds to zero (00:00).

For programs with no set time duration (e.g. Manual, Calories), the diplay counts the total time of your workout (e.g. 15:42 minutes). The maximum time for a workout is 99:59.

Interval Time displays
During an Interval workout, the Interval time display shows the remaining time of the current Interval. An Interval consists of high and low intensity segments. The Interval time 1 counts down the first interval, Interval time 2 counts down the second interval, and the displays continue to alternate during the workout.

Intervals Progress display
During an Interval workout, the Intervals progress display shows the currently active Interval and the total number of Intervals for the workout—for example, 1/8 is the first Interval of a total of eight Intervals.

Calories display
The Calories display counts your total calories. The maximum value for calories during a workout is 9999.

Sprint display
During certain Interval workouts, “Sprint” is illuminated during an Upper Body segment of the workout to encourage the user to increase effort.

Recover display
During certain Interval workouts, “Recover” is illuminated during the reduced resistance segment of the workout.

Benefit Zone display
During a workout, the Benefit Zone display shows the rate of calorie burn: 1 segment = 1.5 calories/minute.
Fat Burn: green, 0-5; Endurance: blue, 6-10; Performance: red, 11-15.

Coa ching Card display
Upper Body display
The illuminated Upper Body image indicates exercise that concentrates on use of the dynamic handlebar arms in the current interval segment (interval programs).

Total Body display
The illuminated Total Body image indicates exercise for the whole body in the current interval segment (interval programs) or workout (steady state programs).

Lower Body display
The illuminated Lower Body image indicates exercise in a bent-knees posittion (“squat”) in the current interval segment (interval programs) .

Forward/Reverse display
Arrows move to show your real-time direction: forward - up arrows; reverse - down arrows.

Forward/Reverse directional coaching labels appear during the appropriate interval. If machine detects that you are not moving in the correct direction, the appropriate label flashes a message to change direction.

Lateral Stride display
The Lateral Stride display shows the width from center of the lateral stride. The range is 1 - 10 and is symmetrical to both sides from the center.

Heart Rate display
The Heart Rate display shows your heart beats per minute. The heart icon will flash when acquiring the rate. With a stable reading, the icon will be shown as solid.

The heart rate displayed is an approximation and should be used for reference only.

At the end of the workout, the display shows the Average Heart Rate.

Workout Segment (Brickyard) display
The Workout Segment display shows the course profile of the workout program. A course profile has up to 30 columns. The segments show changes of resistance over the workout. The more intense the resistance setting, the higher the number of segments. The flashing column shows your location in the workout.

Resistance display

The Resistance display shows the current resistance level in the workout. Maximum resistance level is 10.

At the end of the workout, the display shows the Average Resistance level.

Remote Resistance and Lateral Stride Controls

The remote Resistance and Lateral Stride controls are located on the Static Handlebar arms. The resistance and lateral stride width can be controlled from these keypads. The keypad on the left handlebar arm includes a Lateral Stride Increase key (+) and a Lateral Stride Decrease (–) key. The keypad on the right handlebar arm includes an Resistance Increase key (▲) and a Resistance Decrease (▼) key.

⚠ Do not push these buttons when grabbing onto the Static Handlebar.

Bluetooth® Connectivity with the "Bowflex LateralX™" Fitness App

This fitness machine is equipped with Bluetooth® connectivity and can wirelessly sync with the "Bowflex LateralX™" Fitness App on supported devices. The Software App syncs with your fitness machine to track total calories burned, time, distance, and more. Records and stores every workout for quick reference. Track your results and share with friends and family.

1. Download the free Software App, named the "Bowflex LateralX™" Fitness App. The software app is available on App Store and Google Play™.

   Note: For a complete list of supported devices, review the software app on App Store or Google Play™.

2. Follow the instructions on the Software App to sync your device to your exercise machine.

Workout with Other Fitness Apps

This fitness machine has integrated Bluetooth® connectivity which allows it to work with a number of digital partners. For our latest list of supported partners, please visit: www.bowflex.com/apps.

USB Charging

If a USB Device is attached to the USB Port, the Port will attempt to charge the Device. The power supplied from the USB Port may not be enough to operate the Device and charge it at the same time.

Switch Select™ Pedal Suspension Technology

The pedals are equipped with the Switch Select™ Pedal Suspension Technology which adjusts the angle and impact resistance of the pedals. Adjustment of the pedals may adapt the same workout to affect different muscle groups. The heel areas of the pedals have a 10 degree range of vertical motion. The adjustment lever can set the firmness of the action according to the weight of the user.

Remote Heart Rate Monitor

Monitoring your Heart Rate is one of the best procedures to control the intensity of your exercise. The Console reads the telemetry HR signals from the Heart Rate Chest Strap Transmitter that operates in the 4.5kHz - 5.5kHz range.

Note: The heart rate chest strap must be an uncoded heart rate strap from Polar Electro or an uncoded POLAR® compatible model. (Coded POLAR® heart rate straps such as POLAR® OwnCode® chest straps will not work with this equipment.).

⚠ If you have a pacemaker or other implanted electronic device, consult your doctor before using a wireless chest strap or other telemetric heart rate monitor.

Chest Strap

Using the provided heart rate transmitter chest strap lets you monitor your heart rate at any time during your workout.

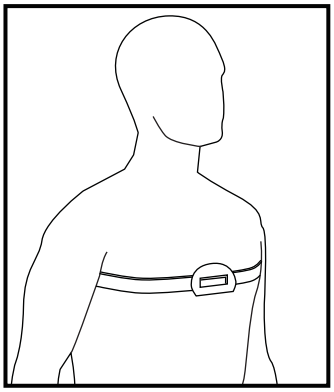

⚠ **Consult a physician before you start an exercise program. Stop exercising if you feel pain or** tightness in your chest, become short of breath, or feel faint. Contact your doctor before you use **the machine again. The heart rate displayed is an approximation and should be used for reference** only.

To put on your chest strap:

1. Secure the strap around your chest just below the chest muscles.
2. Lift the transmitter off your chest and moisten the two Grooved Electrode Areas on the back.
3. Check that the wet electrode areas are firmly against your skin.

The transmitter will send your heart rate to the machine's receiver and display your estimated Beats Per Minute (BPM).

Always remove the transmitter before you clean the chest strap. Clean the chest strap regularly with mild soap and water, and thoroughly dry it. Residual sweat and moisture may keep the transmitter active and drain the battery in the transmitter. Dry and wipe clean the transmitter after each use.

Note: Do not use abrasives or chemicals such as steel wool or alcohol when you clean the chest strap, as they can damage the electrodes permanently.

If the Console does not display a heart rate value, the transmitter may be at fault. Check that the textured contact areas on the chest strap are making contact with your skin. You may need to lightly wet the contact areas. Check that the curve of the transmitter is oriented upward. If no signal appears or you need further assistance, contact Customer Care.

⚠ Before discarding a chest strap, remove the battery. Dispose of in accordance with local regulations and/or at approved recycling centers.

Contact Heart Rate Sensors

Contact Heart Rate (CHR) sensors send your heart rate signals to the Console. The CHR sensors are the stainless steel parts of the Handlebars. To use, put your hands comfortably around the sensors. Be sure that your hands touch both the top and the bottom of the sensors. Hold firm, but not too tight or loose. Both hands must make contact with the sensors for the Console to detect a pulse. After the Console detects four stable pulse signals, your initial pulse rate will be shown.

Once the Console has your initial heart rate, do not move or shift your hands for 10 to 15 seconds. The Console will now validate the heart rate. Many factors influence the ability of the sensors to detect your heart rate signal:

- Movement of the upper body muscles (including arms) produces an electrical signal (muscle artifact) that can interfere with pulse detection. Slight hand movement while in contact with the sensors can also produce interference.

- Calluses and hand lotion may act as an insulating layer to reduce the signal strength.
- Some Electrocardiogram (EKG) signals generated by individuals are not strong enough to be detected by the sensors.
- The proximity of other electronic machines can generate interference.

If your heart rate signal ever seems erratic after validation, wipe off your hands and the sensors and try again.

The heart rate displayed is an approximation and should be used for reference only.

What to Wear

Wear rubber-soled athletic shoes. You will need the appropriate clothes for exercise that allow you to move freely.

How Often Should You Exercise

Consult a physician before you start an exercise program. Stop exercising if you feel pain or tightness in your chest, become short of breath, or feel faint. Contact your doctor before you use the machine again. Use the values calculated or measured by the **machine's computer for reference purposes only. The heart rate displayed on the console is an approximation and should be used** for reference only.

- 3 times a week for 30 minutes each day.
- Schedule workouts in advance and try to follow the schedule.
- Consider doing some warm-up stretches, which will help prepare your body, before your workouts.

Adjusting the Pedals

The Pedals are equipped with the Switch Select™ Pedal Suspension Technology which adjusts the angle of the Pedals. Adjustment of the Pedals may adapt the same workout to affect different muscle groups.

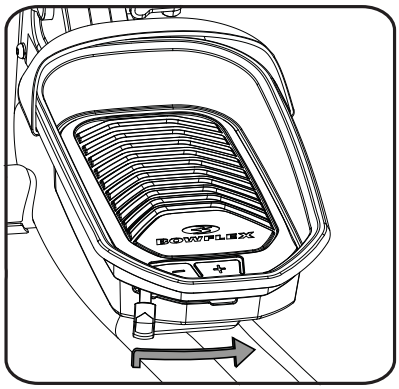

Note: It is recommended to adjust both Pedals to the same setting.

Do not adjust the Pedals when on the machine.

To adjust the Pedal:

1. Tilt the back of the Pedal up.
2. Lift the adjustment lever out of the notch for the current setting and move it to the desired setting. Be sure the lever is engaged in the notch at the new setting.

Mounting and Dismounting the Machine

Care should be used when mounting or dismounting the machine.

Be aware that the Pedals and the Upper Handlebars are connected and when either of these parts move the other does as well. In order to avoid possible serious injury, only grasp the Static Handlebars to steady yourself.

To mount the fitness machine:

1. Move the Pedals until the one nearest you is in the lowest position.
2. Grasp the Static Handlebars under the Console.
3. Steadying yourself with the Static Handlebars, step up onto the lowest Pedal and place your other foot onto the opposite Pedal.

To dismount the fitness machine:

1. Move the Pedal you want to dismount from to the highest position, and bring the machine to a complete stop.

This machine is not equipped with a free-wheel. Pedal speed should be reduced in a controlled manner.

2. Grasp the Static Handlebars under the Console to steady yourself.

3. With your weight on the lowest foot, swing the upper foot off the machine and down onto the floor.

4. Step off of the machine and release your grip from the Static Handlebars.

Power Up / Idle Mode

The Console will enter Power Up mode when initially plugged into a power source, any button is pushed, or if it receives a signal from the RPM sensor as a result of pedaling the machine. The screen displays the X-mode™ program.

Shut Off (Sleep Mode)

If the Console does not receive any input for five minutes, it will automatically shut off.

Push any button to start (wake up) the Console.

Note: The Console does not have an On/Off switch.

User Profiles

The Console is equipped with 4 User Profiles. Each User Profile has values and options specific to it:

- Screen Brightness
- Reset User

The last program that a User completed will be the default program for that User. (A workout of 1 minute or longer will be saved to the User profile.)
The last Volume level that a User set will be the default volume for that User.

Select a User Profile

Every workout is saved to the User Profile and can be reviewed with the Bowflex LateralX™ App. Be sure to select the proper User Profile before starting a workout. The last User that completed a workout will be the default User.

User Profiles are assigned the default values until they are customized by editing.

Edit User Profile

1. From the Power-Up Mode screen, push the USER button to select one of the User Profiles.

2. Push and hold down for 3 seconds the USER button to edit the User Profile.

3. The Console display shows the Screen Brightness prompt and the current value.

   Push the Increase or Decrease buttons to change the displayed Screen Brightness value, and push the ENTER button to accept the displayed value.

   Note: To exit the User Profile options, push the STOP/PAUSE button and the console will go back to the Power-Up Mode screen.

   To return to the previous prompt push the Left, or Back, arrow button.

4. The Console display shows the Reset User prompt and the current value (“NO”). To erase all workouts for the selected User, push the Increase (▲) or Decrease (▼) button to change the value to “YES”, and push Enter. The Console will now confirm if the User wants to erase the workouts. Use the Increase (▲) or Decrease (▼) button to change the value to “YES”, and push Enter. The workouts for this User have been erased.

5. The Console display shows the confirmation screen for two seconds, and then will go to the Power-Up Mode screen.

Getting Started

If you are just starting a fitness program, or returning to one after a long time off, chances are you might not be able to do 16 minutes on it right away. That's okay! One of the primary reasons the Bowflex LateralX™ Trainer is so effective is that it is challenging and it is different, so you need time to get used to it.

Begin by simply turning it on and experiencing the unique motion the LateralX™ Trainer provides. Change your hand positions around on the handles: Place them high, in the middle, low, and on the stationary grips in the center of the LateralX Trainer.

Realize that your first session might just be a few minutes. Once again, that's completely normal. You need to build up slowly on the LateralX™ Trainer — The reason you can torch so many calories in just 16 minutes is that it is a challenging workout. Your focus should be on using the LateralX™ Trainer consistently, not the overall length of the sessions.

So give yourself time to build up to 16 minutes. It may take several weeks. Realize that every session counts, even just a few minutes. Every workout will make you a little stronger, get you a little closer to your goal and, before you know it, you'll be doing the full 16-minute X-mode™ workout!

X-mode™ 16 Minute Interval Program (initial default program)

Strengthen your everyday muscles — To help you get the maximum results in the shortest amount of time, we have added a built-in 16-minute X-mode™ workout that you can start with the simple touch of the button.

The 16 Minute X-mode™ Workout breaks down into these intervals:

* 90 seconds of Total Body
* 30 seconds of Lower Body
* Repeat the intervals 7 more times

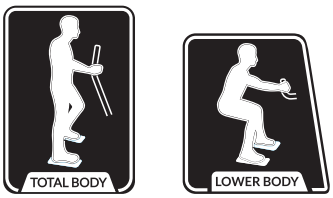

Remember to work out at a pace that is comfortable for you.

The Console screen displays the X-mode™ program at Power-Up.To start the program, push the START button. The program has 8 intervals, 2 minutes for each interval.

1. Review the currently selected User Profile. Push the USER button to change the active User Profile.
2. Mount the machine.
3. Push the X-mode™ button and push START.

Your workout will begin after the three second, audible beep countdown.

As each column is done, the Console hides it so that only the remaining columns are visible. The user can also manually adjust the resistance values at any time during a workout.

Exercise on this machine requires coordination and balance. Be sure to anticipate that changes in resistance levels and lateral stride width can occur during workouts, and be attentive in order to avoid loss of balance and possible injury.

During a Profile Program workout, the Console will make an audible beep when the next segment of the workout occurs. Be pre-pared for changes in Resistance with each segment change.

If the Sound has been muted, the Console will display the "AUDIO OFF" prompt for a few seconds.

Workout Programs

The Workout Programs have up to 30 columns allowing for a variety of resistance based workouts. As the workout progresses, the current segment (column) flashes. The user can also manually adjust the resistance values at any time during a workout.

During a Profile Program workout, the Console will make an audible beep when the next segment of the workout occurs. Be prepared for changes in Resistance with each segment change.

If the Sound has been muted, the Console will display the "AUDIO OFF" prompt for a few seconds.

Workouts of 1 minute or longer are automatically saved to the Console. A maximum of 156 workouts can be saved to the Console. Once the maimum number of workouts is reached, the oldest workout will be erased.

Interval Workout Programs

During an Interval Workout, the workout will switch between an increased activity period and a lower activity period . This shift will be repeated for the total number of intervals. The Console will show the current Interval and how many Intervals need to be completed ("1/8" is the first Interval of a total of eight Intervals). The Console will count down the time remaining of the active part of the Interval. During certain Interval Workouts, the Console display will show Sprint (during increased activity period) or Recover (slower paced, 'catch your breath' time period).

X-mode™ 16 Minute Interval

(8 intervals, 2 minutes for each interval)

- Total body (default: lateral 8, resistance 2): two columns = 90 seconds
- Lower body (default: lateral 6, resistance 1): one column = 30 seconds

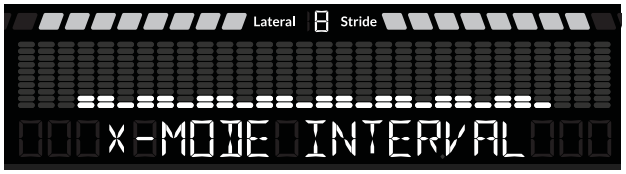

Lateral Stride Interval

30 minute program (15 intervals, 2 minutes for each interval)

- Narrow (default: lateral 6, resistance 1): one column = 60 secs
- Wide (default: lateral 8, resistance 2): one column = 60 secs

Thigh Toner Interval

16 minute program (8 intervals, 2 minutes for each interval)
Adjusts lateral width according to user's speed.

- More effort (gets wider, default resistance 2): one column = 30 secs
- Less effort (gets narrower, default resistance 1): two columns = 90 secs
- Default lateral: 6
- Lateral Stride buttons disabled

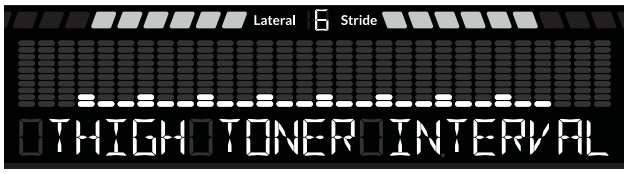

Quad Power Interval

16 minute program (8 intervals, 2 minutes for each interval)
Adjusts resistance and lateral width according to user's speed.

- More effort (gets wider, resistance gets higher, default resistance 3): one column = 30 secs
- Less effort (gets narrower, resistance gets lower, default resistance 1): two columns = 90 secs
- Default lateral: 6
- Resistance and Lateral Stride buttons disabled

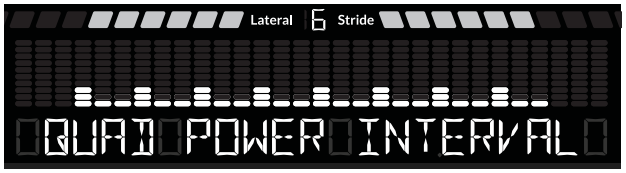

Total Body

16 minute program (8 intervals, 2 minutes for each interval)

- Total body (default resistance 3): one column = 60 seconds
- Upper body (default resistance 2): one column = 30 seconds
- Lower body (default resistance 1): one column = 30 seconds
- Default lateral: 6

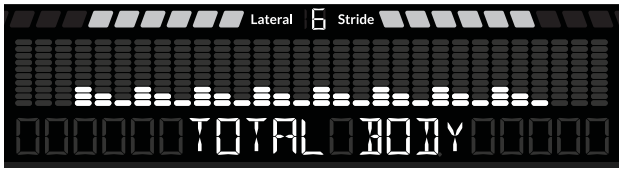

The "Sprint" period of an Interval Workout is a suggested workout level increase, and should only be followed if your physical **fitness level allows.**

Stand Squat

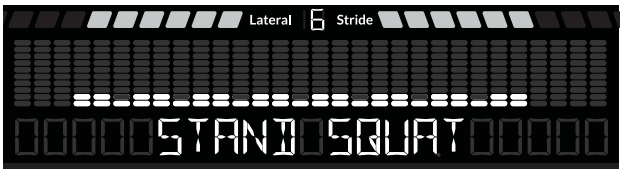

16 minute program (8 intervals, 2 minutes for each interval)
- Total body (default resistance 2): two columns = 90 seconds
- Lower body (default resistance 1): one column = 30 seconds
- Reverse direction Total body (default resistance 2): two columns = 90 seconds
- Reverse direction Lower body (default resistance 1): one column = 30 seconds
- Default lateral: 6

Dual Direction

30 minute program (15 intervals, 2 minutes for each interval)
- Forward (default resistance 2): one column = 60 seconds
- Reverse (default resistance 1): one column = 60 seconds
- Default lateral: 6

Steady State Programs

Fat Burn

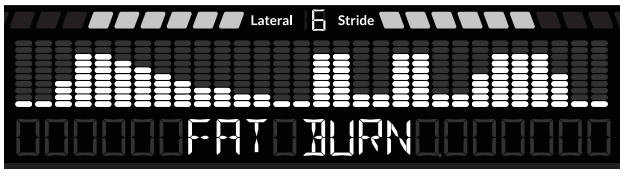

30 minute program (1 minute each column)
- Default lateral: 6

Calorie Goal

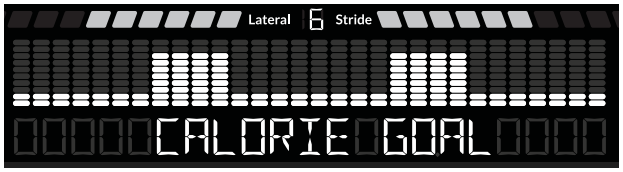

300 calories (default goal)
Before a workout, push the Increase (▲) or Decrease (▼) buttons to adjust the Goal by 50 calorie increments.

Note: 50 calories is the minimum, 9950 calories is the maximum.

Movement of the flashing indicator across the columns shows progress toward the calorie goal. The two peaks represent resistance adjustments (default resistance 2, then 8).
- Default lateral: 6

Manual

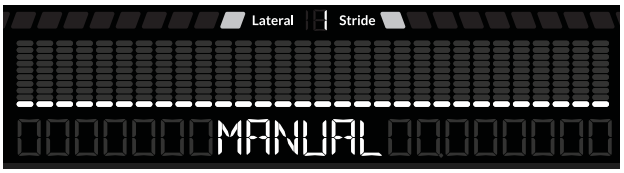

(Open-ended workout, 1 minute each column)

Note: maximum time is 99:59.
- Default lateral: 6

Starting a Workout

To begin a workout:

1. Review the currently selected User Profile. Push the USER button to change the active User Profile.

2. Mount the machine.

Be sure that the workout space you are utilizing has adequate height clearance, taking into consideration the height of the user and **the maximum height of the Pedals.**

3. Push the button for the desired Program Workout. The Console will show the selected workout.

4. Push the START button.

Your workout will begin after the three second, audible beep countdown.

Exercise on this machine requires coordination and balance. Be sure to anticipate that changes in resistance levels and lateral stride width can occur during workouts, and be attentive in order to avoid loss of balance and possible injury.

During a Profile Program workout, the Console will make an audible beep when the next segment of the workout occurs. Be pre-pared for changes in Resistance and Lateral Stride width with each segment change.

If the Sound has been muted, the Console will display the "AUDIO OFF" prompt for a few seconds.

If during a workout the User pushes one of the Program buttons, the Console will ask if they would like to switch workouts. If the User confirms the switch by pressing the ENTER button, the current workout will be ended. The new workout program will be displayed, and will begin when the START button is pushed.

Changing Lateral Stride Width

Push the Lateral Stride Increase(+) or Decrease(–) buttons to change the width of the lateral stride motion before or during a workout program.

Note: The Lateral Stride buttons are disabled during the Thigh Toner Interval and Quad Power Interval programs.

Changing Resistance Levels

Push the Resistance Level Increase(▲) or Decrease(▼) buttons to change the resistance level before or during a workout program.

Note: The Resistance buttons are disabled during Quad Power Interval programs.

Changing a Workout Program During a Workout

The Console allows a different Workout Program to be started from an active workout.

1. From an active workout, push the button for the desired Program Workout. .

2. The Console will show a prompt to confirm the workout selection. Push ENTER.

   To continue in the current program, use the Increase(▲) or Decrease(▼) buttons to select NO, and push ENTER.

   Note: The workout metrics will not carry over from the previous workout to the new workout. If the previous workout was at least one minute long, the results will be saved to the User profile.

3. The Console will show the selected workout. Push the START button.

   Your workout will begin after the three second, audible beep countdown.

Pausing or Stopping a Workout

1. Stop pedaling and push the STOP/PAUSE button to pause the workout.

   Note: The workout automatically pauses if there is no input for 15 seconds. If a paused workout is not restarted in 5 minutes, the machine will end the workout and display the workout results.

2. To resume your workout, push the START button or begin pedaling. To end your workout, push STOP/PAUSE again. The Console will display your workout results.

Workout Complete / Results

When the goal of a workout is achieved the Console will display, “Workout Complete,” for two seconds. The Console will display the workout results— Time, Calories, Interval rounds (Interval programs only), brickyard display of the user’s output, Lateral Stride (last lateral number), Average Heart Rate, and Average Resistance level. Then the Console will display, “Saving Workout” for two seconds.

Tap the Sync icon on the app screen on your device to download the workout data. Then go to the Journal screen to see your workout results.

If the Console does not receive any further input after 5 minutes, the Console will shut off.

Customize the Goal for the Calorie Goal Program

The workout goal for the Calorie Goal program can be adjusted. Once changed, the new value will be the default for future Calorie Goal workouts.

1. Push the Calorie Goal button.
2. Push the Increase or Decrease buttons to adjust the displayed calorie goal value.

   The default Calorie Goal value is 300 calories and is adjusted in 50 calorie increments. 50 calories is the minimum value for a workout, 9950 calories the maximum value.
3. Push START to set the value and begin a Calorie Goal Program workout.

Celebrations

When a Celebration is earned the Console will make an audible sound, display the name of the achievement, and animate the lights in a certain sequence.

- For every 100 calories burned
- Longest (timed) Workout

To review achieved Celebrations, go to the Journal page in the Bowflex LateralX™ App. Celebrations will be provided with the workout results.

The Machine Settings Mode lets you view the total run hours for the machine and the current versions of the main systems.

1. Hold down the STOP/PAUSE button and Right arrow button together for 3 seconds while in the Power-Up Mode to access the Machine Settings Mode.

   Note: Push STOP/PAUSE to exit the Machine Settings Mode and return to the Power-Up Mode screen.

2. The Console displays the TOTAL HOURS for the machine.
3. Push the Right button to go to the next option.
4. The Console display shows the current Console Firmware Version.
5. Push the Right button to go to the next option.
6. The Console display shows the current Motor Control Board Firmware Version.
7. Push the Right button to go to the next option.
8. The Console display shows the current BLE Version.
9. Push the Right button to go to the next option.
10. The Console displays the DISCONNECT BLE NO prompt.

    Note: If you want to disconnect the Bluetooth® transmitter, push the Increase/Decrease buttons to select the “DISCONNECT BLE YES” option, and push Enter. The Console will exit the Machine Settings Mode and return to the Power-Up Mode screen.

11. Push the Right button to go to the next option.
12. The Console displays the VIEW ERROR MSG NO option. This option is for Service Technicians use only.
13. Push the Right button to go to the next option.
14. The Console displays the RESET CONSOLE NO prompt.

    Note: If you want to reset the Console to factory settings, push the Increase/Decrease buttons to select the “RESET CONSOLE YES” option, and push ENTER. Turn the machine off when the Console displays the “POWER CYCLE NOW” prompt.

15. Push the STOP/PAUSE button to exit the Machine Settings Mode and return to the Power-Up Mode screen.

Maintenance

Read all maintenance instructions fully before you start any repair work. In some conditions, an assistant is required to do the necessary tasks.

Equipment must be regularly examined for damage and repairs. The owner is responsible to make sure that regular maintenance is done. Worn or damaged components must be repaired or replaced immediately. Only manufacturer supplied components can be used to maintain and repair the equipment.

If at any time the Warning labels become loose, unreadable or dislodged, replace the labels. If purchased in US/Canada, contact Customer Service for replacement labels. If purchased outside US/Canada, contact your local distributor for them.

Disconnect all power to the machine before you service it.

Daily: Before each use, examine the exercise machine for loose, broken, damaged, or worn parts. Do not use if found in this condition. Repair or replace all parts at the first sign of wear or damage. After each workout, use a damp cloth to wipe your machine and Console free of moisture.

NOTICE: If necessary, only use a mild dish soap with a soft cloth to clean the Console. Do not clean with a petroleum based solvent, automotive cleaner, or any product that contains ammonia. Do not clean the Console in direct sunlight or at high temperatures Be sure to keep the Console free of moisture.

Weekly: Check for smooth crank and pedal arm operation. Wipe the machine to remove dust, dirt, or grime.

NOTICE: Do not use petroleum based products. Do not apply petroleum based products, lubricant or chemicals to the chrome-plated shafts in the Adjustable Arms.

Monthly or after 20 hours: Make sure all bolts and screws are tight. Tighten if necessary.

NOTICE: Loose screws at the indicated locations may cause squeaking, clicking or knocking noises. Be sure to tighten *FULLY*.

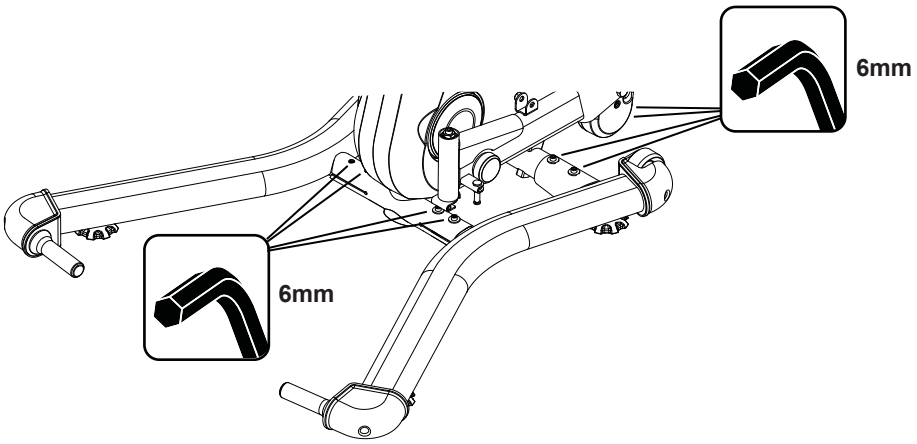

Pedal arms not shown

Replace Batteries in Chest Strap

The heart rate (HR) chest strap uses a CR2032 battery.

Do not perform this procedure outdoors or in moist or wet locations.

1. Using a coin, loosen the slotted cover on the battery bay. Remove the cover and battery.
2. When replacing the battery, insert it in the battery bay with the + symbol facing up.

   Note: The chest strap uses CR2032 size batteries.
3. Reinstall the cover on the strap.
4. Discard the old battery. Dispose of in accordance with local regulations and/or at approved recycling centers.
5. Inspect your chest strap to ensure function.

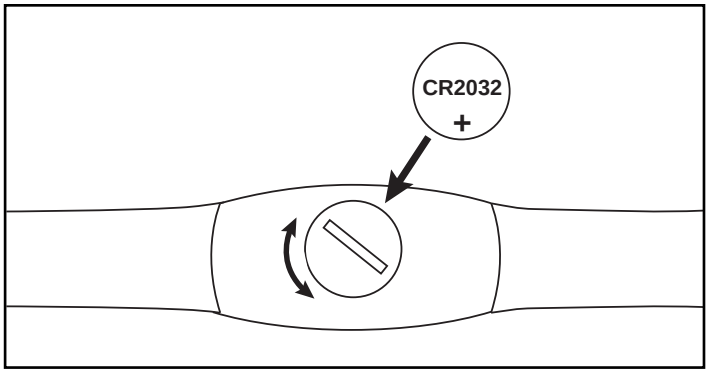

Do not use until the equipment has been fully assembled and inspected for correct performance in accordance with the Owner's Manual.

Maintenance Parts

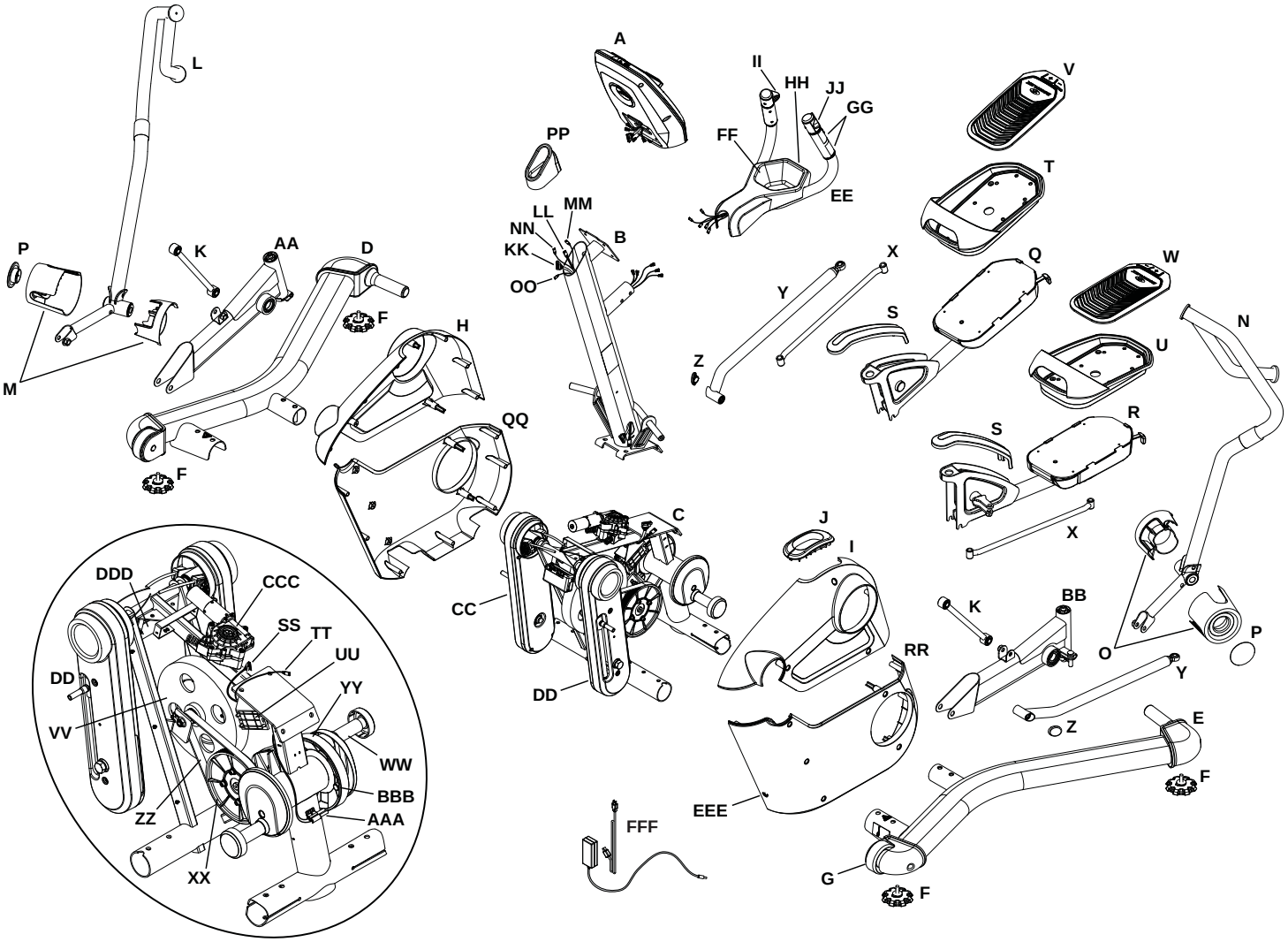

Item	Description	Item	Description	Item	Description	Item	Description
A	Console	P	Pivot Bolt Cover	EE	Static Handlebar	TT	Data Cable, Lower Lateral
B	Console Mast	Q	Pedal Arm, Right	FF	Cupholder	UU	Servo Motor, Resistance
C	Engine Assembly	R	Pedal Arm, Left	GG	Contact HR Sensor	VV	Resistance Flywheel
D	Base Assembly, Right	S	Pedal Arm Topcap	HH	Telemetric HR Receiver	WW	Crank
E	Base Assembly, Left	T	Pedal Shroud, Right	II	Remote Resistance Control	XX	Pulley, Second Stage Crank
F	Leveler Foot	U	Pedal Shroud, Left	JJ	Remote Lateral Control	YY	Drive Belt, Right, J10
G	Transport Wheel	V	Foot Pad, Right	KK	Data Cable, Upper Resistance	ZZ	Drive Belt, Leftt, J8
H	Upper Shroud, Right	W	Foot Pad, Left	LL	Data Cable, Upper Lateral	AAA	Dual Speed/Direction Sensor
I	Upper Shroud, Left	X	Parallel Link	MM	Remote Resistance Control Wire	BBB	Speed Sensor Magnet
J	Mast Gasket	Y	Lateral Link	NN	Remote Lateral Control Wire	CCC	Cable Actuator
K	Handlebar Link	Z	Lateral Link Endcap	OO	HR Cable, Console Mast	DDD	PCBA Slim Control Board
L	Handlebar Arm, Right	AA	Mid Pedal Arm, Right	PP	Mast EndCap	EEE	Power Inlet
M	Pivot Cover, Right	BB	Mid Pedal Arm, Left	QQ	Lower Shroud, Right	FFF	Power Adapter w/Cord
N	Handlebar Arm, Left	CC	Adjustable Arm, Right	RR	Lower Shroud, Left		
O	Pivot Cover, Left	DD	Adjustable Arm, Left	SS	Data Cable, Lower Resistance		

Condition/Problem	Things to Check	Solution
No display/partial display/unit will not turn on	Check electrical (wall) outlet	Make sure unit is plugged into a functioning wall outlet.
	Check connection at front of unit	Connection should be secure and undamaged. Replace adapter or connection at unit if either are damaged.
	Check data cable integrity	All wires in cable should be intact. If any are visibly crimped or cut, replace cable.
	Check data cable connections/ orientation	Be sure cable is connected securely and oriented properly. Small latch on connector should line up and snap into place.
	Check console display for damage	Check for visual sign that console display is cracked or otherwise damaged. Replace Console if damaged.
	Console Display	If Console only has partial display and all connections are fine, replace the Console.
		If the above steps do not resolve the problem, contact Customer Service (if inside US/Canada) or your local distributor (if outside US/Canada).
Unit operates but Contact HR not displayed	HR cable connection	Be sure cable is connected securely at top of Console Mast..
	Sensor grip	Be sure hands are centered on HR sensors. Hands must be kept still with relatively equal pressure applied to each side. If there is plastic film on the HR sensor, carefully peel off the film.
	Dry or calloused hands	Sensors may have difficulty with dried out or calloused hands. A conductive electrode cream (heart rate cream) can help make better conduct. These are available on the web or at medical or some larger fitness stores.
	Static Handlebar	If tests reveal no other issues, Static Handlebar should be replaced.
Unit operates but Telemetric HR not displayed	Chest Strap (optional)	Strap should be "POLAR®" compatible and uncoded. Make sure strap is directly against skin and contact area is wet.
	Chest Strap Battery	If strap has replaceable batteries, install new batteries.
	Interference	Try moving unit away from sources of interference (TV, Microwave, etc).
	Replace Chest Strap	If interference is eliminated and HR does not function, replace strap.
	Replace Console	If HR still does not function, replace Console.
Unit operates but Telemetric HR displayed incorrectly	Interference	Make sure that the HR receiver is not blocked by a personal electronic device in the cupholder.
Resistance does not change (machine turns on and operates)	Check Console	Check for visual sign that Console is damaged. Replace Console if damaged.
	Check data cable connections/ orientation	Be sure cable connections at top and bottom of Console Mast are connected securely and oriented properly. Reseat all connections. Small latch on connector should line up and snap into place.
	Resistance handlebar connection	Be sure cable from Static Handlebar and cables to Console are secure and undamaged.
		If the above steps do not resolve the problem, contact Customer Service (if inside US/Canada) or your local distributor (if outside US/Canada).
Console shuts off (enters sleep mode) while in use	Check electrical (wall) outlet	Make sure unit is plugged into a functioning wall outlet.
	Check connection at front of unit	Connection should be secure and undamaged. Replace adapter or connection at unit if either are damaged.
	Check data cable connections/ orientation	Be sure cable connections at top and bottom of Console Mast are connected securely and oriented properly. Small latch on connector should line up and snap into place.

Condition/Problem	Things to Check	Solution
	Reset machine	Unplug unit from electrical outlet for 3 minutes. Reconnect to outlet.
	Check Speed Sensor (requires shroud removal)	Speed sensors should be aligned with magnet and connected to data cable. Realign sensor if necessary. Replace if there is any damage to the sensor or the connecting wire.
Fan will not turn on or will not turn off	Check data cable integrity	All wires in cable should be intact. If any are cut or crimped, replace cable.
	Check data cable connections/ orientation	Be sure cable is connected securely and oriented properly. Small latch on connector should line up and snap into place.
	Reset machine	Unplug unit from electrical outlet for 3 minutes. Reconnect to outlet.
Fan will not turn on, but Console operates	Check for blockage of fan	Unplug unit from electrical outlet for 5 minutes. Remove material from fan. If necessary, detach the Console to help with removal. Replace the Console if unable to remove blockage.
Unit rocks/does not sit level	Check leveler adjustment	Adjust levelers until machine is level.
	Check surface under unit	Adjustment may not be able to compensate for extremely uneven surfaces. Move machine to level area.
Machine slides from side to side during operation	Floor surface	The machine may slide on a hard surface. Put the machine on a rubber machine mat, which will provide a non-slip surface.
Foot pedals loose/unit difficult to operate	Hardware	Tightly secure all hardware on the Pedal Arms and Handlebar Arms.
Click, tick or knocking sound	Check for loose hardware	Tightly secure all hardware.
	Check foot assemblies, leg assemblies, handlebar assemblies	Manually move foot, leg, and handlebar assemblies to isolate sound. Contact Customer Service (if inside US/Canada) or your local distributor (if outside US/Canada).
Workout results will not sync with Bluetooth® enabled device	Current console mode	Machine must be in Idle Mode to sync. Push the STOP/PAUSE button until the Power-Up Mode screen is displayed.
	Total time of workout	A workout must be longer than 1 minute to be saved and posted by the Console.
	Fitness machine	Unplug unit from electrical outlet for 5 minutes. Reconnect to outlet.
	Bluetooth® enabled device	Consult your device to be sure that the Bluetooth® wireless feature has been enabled on it.
	Fitness App	Review Specifications of Fitness App and confirm your device is compatible.
		Contact appsupport@nautilus.com (if inside US/Canada) or your local distributor (if outside US/Canada) for further assistance.

Introduction and Overview

Welcome to the Bowflex™ Body Weight Loss Guide. This guide is designed to be used with your Bowflex™ equipment and will help you:

- Lose weight and get lean
- Improve your health and wellness
- Increase your energy and vitality

Consult a physician before you start an exercise program or a new health and diet plan. Stop exercising if you feel pain or tightness in your chest, become short of breath, or feel faint. Contact your doctor before you use the machine again. Use the values calcu**lated or measured by the machine's computer for reference purposes only. The heart rate displayed on the console is an approxi**mation and should be used for reference only.

By focusing on the main three elements of the Bowflex™ Body Weight Loss Guide- quality, balance, and consistency- you'll be able to reach and maintain your weight loss and fitness goals for the next six weeks and beyond.

- Quality – The emphasis of this plan is on eating more whole foods and getting the most nutrients from your calories as possible. Making the majority of your diet from foods that have a single ingredient (for example fruits, vegetables, fish, lean protein, eggs, beans, nuts, and whole grains) provides the vitamins, minerals, fiber, protein, and healthy fats your body needs.
- Balance – Each of the meals and snacks in this guide have a source of fiber or smart carbohydrate, protein, and healthy fat to keep your energy levels consistent throughout the day to fuel your workouts. By having this balance you'll feel fuller longer, which is critical to weight loss success.
- Consistency – Getting about the same number of calories each day is important for your metabolism and your mindset. If you overdo it one day, don't try to make up for it the next day by not eating or cutting your calories drastically. Get right back on track by following this guide!

Results & Expectations

Results will vary depending on your age, starting weight, and exercise level but on average you may lose 1-3 lbs per week and experience increased energy levels.

5 Tips for Long-Term Success

1. Keep a food log including hunger levels and water intake. Free online food logs and mobile apps are available at www.myfitnesspal.com and www.loseit.com
2. Weigh and/or take measurements weekly – no more and no less. Weighing weekly rather than daily or every other day is best. You'll track your progress and keep yourself in check without getting discouraged if the scale doesn't move for a few days. And remember, weight is just a number and it's influenced by muscle gain as well as fat loss. Feeling how your clothes fit can often be a better indicator of progress as your body adapts to exercise and nutrition changes.
3. Measure portions – To avoid portion creep, use measuring cups and spoons for grains (rice, pasta, cereal), beans, nuts, oils, and dairy. Use the Portion Sizes Guide for other foods.
4. Plan ahead – Make a meal plan for the week or log your food a day in advance. Planning sets you up for success, especially for social events and eating out.
5. Practice your desired long-term habits – It's easy to justify poor eating choices when you're only focused on the short term. Focus on the long term satisfaction of a slimmer, healthier you rather than the temporary gratification you'll get from splurging.

How to Use this Guide

- Eat breakfast within 90 minutes of waking up and balance your meals and snacks throughout the day
  - Don't go longer than 5-6 hours without eating
  - If you're not used to eating breakfast, start out small with a piece of fruit and have something else 1-2 hours later. Your body adapts to not eating breakfast, but as soon as you start eating early in the day and cutting back on dinner portions you'll notice your hunger will increase. This is a good sign your metabolism is working!
- **Mix and match meal options**
  - Select 1 option from the appropriate meal plan (male or female) for breakfast, lunch, and dinner, paying close attention to portion sizes
  - Select 1-2 snack options per day
  - You have the option to substitute one snack for one treat under 150 calories
  - Use the meal plan, sample options, and grocery list to create your own meals for more variety

– You can swap out any type of protein, vegetables or smart carbs for the suggested meal options. For example:
    - Turkey for tuna
    - Any fish or seafood for chicken
    - Cooked vegetables instead of salad
- Eat your calories
  – Cut out high calorie beverages like soda, juices, coffee drinks, and alcohol
  – Stick with water, unsweetened tea, and coffee. Aim for a minimum of 64oz (1.9 liters) of water per day to stay well hydrated
- If you're still hungry after or in between meals:
  – Have a glass of water and wait 15-20 minutes. Many times we mistake thirst (or even boredom!) for hunger. Wait out the initial urge to eat and sometimes it will pass.
  – If you're still hungry after waiting 15-20 minutes have a snack or mini-meal with fruit, vegetables, and protein.

If your goal is muscle gain or strength:

- Use the same meal plan but increase portion sizes in the same ratios to increase the total number of calories you eat every day. For example, increase portion sizes of protein and smart carbs at meals by 50%. Adding a snack is another option to meet your body's increased calorie needs in order to gain muscle and strength.
- Focus on post-workout nutrition by having one of your snacks within 30 minutes after you complete your workout. Make sure to have a combination of carbohydrates such as fruit with protein (yogurt, milk, or protein powder) to promote muscle growth and recovery. Chocolate milk is also a great option.

Meal Plan Overview

The female meal plan provides about 1400 calories, and the male plan provides about 1600 calories, of high quality nutrition to not only help you lose weight and feel great but get the most out of your calories. The vitamins, minerals, and antioxidants from eating mostly whole foods help support optimal health. These calorie levels will result in healthy weight loss for the majority of people. Keep in mind that everyone's metabolism is very different depending on age, height, weight, activity level, and genetics. Pay close attention to your weight, hunger levels, and energy and adjust your calories if needed.

Follow these guidelines if you're over 55:

- If you're over 55, you need fewer calories because your metabolism slows as you age. Stick with three meals with one optional snack per day.

Follow these guidelines if you're under 25:

- If you're under 25 you may need more calories. Add another snack if you feel low on energy or are extremely hungry.

Breakfast

Breakfast includes a smart carb, fruit, and a source of protein, which will also have fat. With a balance of carbohydrates and fiber from the smart carb and fruit combined with protein and fat, you'll energize your day and help control hunger levels throughout the day.

Snacks

Each snack is a balance of carbohydrates and protein to keep your blood sugar more consistent, which means you won't experience hunger and energy level spikes and drops.

This happens when you have a high carb-only snack like chips, candy, soda, crackers, or pretzels.

Lunch and Dinner

Lunch combines filling fiber from vegetables and smart carbs with a lean, or low-fat, protein. The healthy fat can come either from the protein added during cooking (nuts on a salad) or as a dressing or sauce (such as oil and vinegar salad dressing).

Here's an overview of what an ideal day looks like:
(See Portion Size Guide for proper serving sizes)

Breakfast

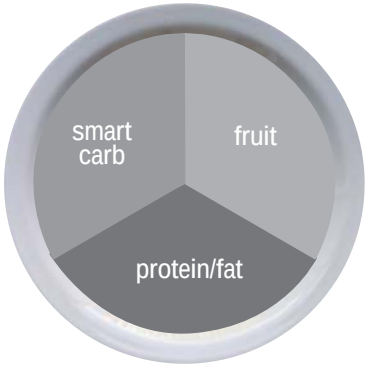

Snack #1

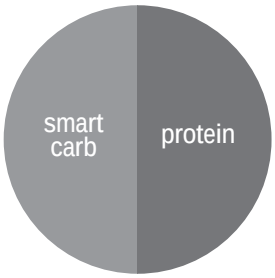

Lunch

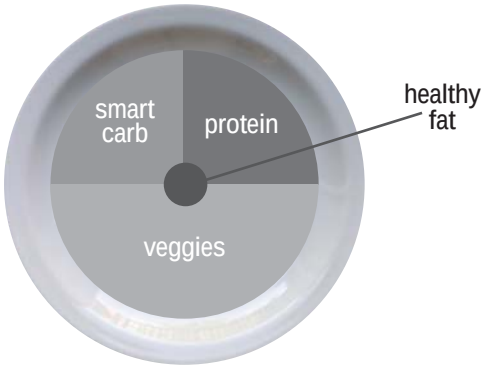

Snack #2

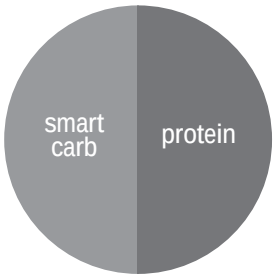

Dinner

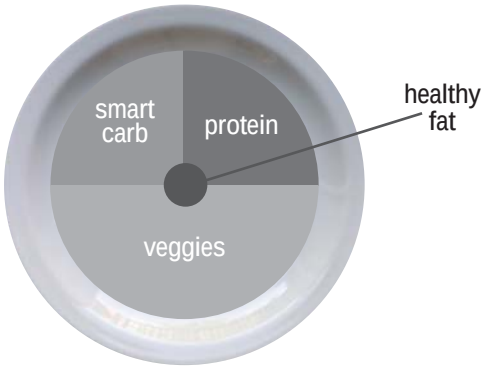

Breakfast Options	Fruit	Smart Carb	Protein/Fat
Fruit and Nut Oatmeal Cook plain oats in water. Top with fruit, nuts, milk, cinnamon, and honey.	Berries or banana	Plain oats (Regular or quick-cook)	Nuts and milk
Egg Muffin Cook egg/s. Toast bread and top with 1 slice of cheese, 1 slice of ham, and tomato.	Tomato	English muffin or sandwich thin	Egg, ham, and cheese
Yogurt Power Parfait Top yogurt with fruit. Sprinkle with 1 serving of nuts, 2-3 tbsp wheat germ, or ground flaxseed, 1 tbsp oats, and cinnamon.	Chopped fruit of your choice	Oats, wheat germ, and ground flaxseed	Plain non-fat Greek yogurt and nuts
On the Go PB & Apple Sandwich Toast bread. Spread on peanut butter, thin slices of ½ an apple, and 1 teaspoon of honey.	Sliced apple	Sandwich thin, bread, or bagel thin	Peanut butter

Lunch & Dinner Options	Lean Protein	Smart Carb	Veggies
Pork Loin, Sweet Potato & Green Beans	Grilled or baked pork loin	Baked Sweet Potato	Green Beans
Chicken Stir Fry Flavor with 2 tablespoon teriyaki sauce	Chicken breast or boneless skinless thigh	Brown or wild rice	Mixed stir fry vegetables (fresh or frozen)
Steak Tacos with Side Salad (3 for males, 2 for females) Top with salsa, cilantro, and sprinkle of shredded cheese	Flank or sirloin steak	Corn tortillas	Salad
Whole Wheat Pasta with Shrimp or Cannellini Beans & Marinara Sauce	Shrimp (frozen or fresh) or cannellini beans	Whole wheat pasta	Steamed broccoli
Bunless Burgers with Oven Fries, Corn, & Salad Grill burgers. Bake sliced potatoes on sprayed cookie sheet for 25-30 minutes @ 425°F.	93% lean ground beef or turkey	Oven baked fries	Corn on the cob + side salad
Tuna & Avocado Wrap with Vegetable Soup Use 3oz of tuna (1 can). Top with lettuce, tomato, avocado, and mustard.	Tuna	High-fiber wrap	Vegetable soup (homemade or low-sodium canned)

Snack Options	
Smart Carb	Protein
1 medium apple	10-15 almonds
Baby carrots	2 tbsp hummus
1 serving of crackers*	1 string cheese
Energy or protein bar with <200 calories*	

*See www.Bowflex.com/Resources for brand recommendations

Optional Treats

You have the choice of replacing Snack #2 with a 100-150 calorie treat. You can have an optional treat every day but for optimal health it is recommended to limit small splurges to 3-4 times per week. Use the approach that works best for you. Here are a few examples:

- ½ cup lowfat ice cream
- 1 small bag of baked potato chips
- 4oz of wine or 12oz light beer
- 3 cups of air-popped or light popcorn

Sample 3 Day Plan

Based on each of the meal options listed above, a typical 3 day plan could look like this:

	Day 1	Day 2	Day 3
Breakfast	Egg muffin	Power yogurt parfait	Fruit + nut oatmeal
Snack 1	Apple with almonds	Nut Thins® + string cheese	Baby carrots and hummus
Lunch	Tuna & avocado wrap with soup	Leftovers from dinner- day 1	Leftovers from dinner- day 2
Optional Snack 2 or Treat	½ cup ice cream bar	Energy bar	100 calorie bag of light popcorn
Dinner	Shrimp pasta	Chicken stir fry	Bunless burgers

Portion Size Guide

Each of the items listed are for one serving

MALE	FEMALE
PROTEIN	
2 eggs 5oz chicken, fish, lean meat, or tofu 2/3 cup beans or lentils* 1 cup greek yogurt* 1.5oz cheese*	1 egg 3oz chicken, fish, or lean meat 1/2 cup beans or lentils* 1/2 cup greek yogurt* 1.5oz cheese*
HEALTHY FAT	
2 Tblspn peanut or nut butter* 2 tspn olive, flax, or walnut oil 1/4 cup of nuts 1/3 medium avocado	1 tblspn peanut or nut butter* 1 tspn olive, flax or walnut oil 1/8 cup or 2 tablespoons of nuts (approx.15 almonds) 1/4 medium avocado
SMART CARB	
1 cup cooked grains (1/2 cup raw): oats, brown rice, quinoa, pasta 1 medium sweet or regular potato 2 corn tortillas 1 slice of bread (or 2 light slices equaling 120 calories or less) 1 english muffin, sandwich thin, or high-fiber wrap	1/2 cup cooked (1/4 cup raw) grains 1/2 medium sweet potato or regular potato 2 corn tortillas 1 slice of bread (or 2 light slices equaling 120 calories or less) 1 english muffin, sandwich thin, or high-fiber wrap
FRUIT	
1 medium apple, orange, or pear 1 small banana (length of your hand) 1 cup berries or chopped fruit 1/4 cup dried fruit (fresh or frozen is optimal)	
Vegetables* You can have unlimited vegetables except for peas and corn; stick with 1/2 cup serving	
2 cups spinach or lettuce = 2 cupped hands 1 cup raw vegetables 1/2 cup cooked vegetables 6oz low sodium vegetable juice	
OPTIONAL TREATS	
1/2 cup lowfat ice cream 1 small bag of baked potato chips 1oz dark chocolate 4oz of wine or 12oz light beer 3 cups air-popped or light popcorn	

* some foods are a combination of protein and carbs or protein and fat

1 cup = baseball

1/2 cup = lightbulb

1 oz or 2 tbsp = golf ball

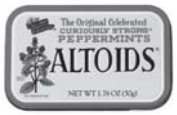

1/4 cup nuts = Altoids tin

3 oz chicken or meat = deck of cards

1 medium potato = computer mouse

1 medium piece of fruit = tennis ball

1 -1/2 oz cheese = 3 dice

Grocery List

BREAD & GRAINS	
100% whole wheat bread Sprouted grain breads Light or whole wheat english muffins Sandwich or bagel thins Corn or low-carb whole wheat tortillas High-fiber wraps Plain oats: 1 minute or old fashioned Whole grains: brown rice, bulgar, barley, quinoa, couscous	Tips: Look for 100% whole wheat as the first ingredient. Look for 4g of fiber per slice or 5g per 2 slices of light or diet bread. Aim for bread with less than 100 calories per slice.

DAIRY & DAIRY ALTERNATIVES
Plain non-fat greek yogurt Kefir (yogurt like drink) Organic low-fat milk Enriched almond or soy milk Cheese: feta, parmesan, mozzarella, light havarti, provolone, swiss, string cheese, or single serving packages

MEAT, FISH, POULTRY & PROTEIN
Wild game Salmon, halibut, tuna, tilapia, shrimp, catfish, scallops, or crab Pork loin, pork chops, or pork roast Chicken or turkey breast or thighs (no skin) Eggs and 100% egg whites Lean beef: sirloin, chuck, round, tenderloin, 93% lean (organic and grass fed is best) Canned salmon or tuna (in water) Nitrate-free, reduced sodium ham, turkey, chicken, or roast beef lunch-meat Any type of bean, dry or canned low-sodium varieties Tofu and tempeh
Tips: Look for “Choice” or “Select” cuts of meat rather than “Prime”. Prime cuts are fattier. Limit intake of highly processed meat and imitation meat products like sausage, bacon, pepperoni, and hot dogs to once a week or less.

FROZEN FOODS
All vegetables without sauce All fruit Grains and grain medleys

CRACKERS, SNACKS & ENERGY BARS	
Any unsalted nuts or seeds Air-popped or light popcorn Edamame in the pod	Energy bars Crackers Hummus
Tips: Limit crackers, pretzels, and chips to 2-3 servings per week. Always pair with protein such as hummus, cheese, or nuts. Look for energy bars with less than 200 calories and 20g of sugar and at least 3g of protein and 3g of fiber. Look for crackers with less than 130 calories and 4g or less of fat per serving.	

FATS & OILS
Avocado Olive, grapeseed, walnut, sesame, or flaxseed oil Butter/spreads: look for products free of trans fats and partially hydrogenated oils on the ingredient list.
Tips: Light olive oil refers to the flavor, not the calorie content. Always measure oil and butter. Even if a fat is considered healthy, it’s still very high in calories and portions need to be controlled.

DRESSINGS, CONDIMENTS & SAUCES
Vinegars: rice, wine, balsamic All fresh or dried herbs and spices Mustard Salsa and chili sauce Marinara sauce with no high-fructose corn syrup Lemon and lime juice Bottled minced garlic and ginger Low-sodium soy sauce
Tips: Look for products free of MSG, added colors, and high fructose corn syrup. Look for sauces under 50 calories per serving. Avoid cream based sauces and dressings like ranch, bleu cheese, and alfredo.

All fruits and vegetables, fresh and frozen, are great choices. Since every meal has one or both, your shopping cart should reflect this.

Keep It Going

Tips for continued weight loss and maintaining changes

- Keep weighing yourself weekly, even after you've reached your goal weight
- Continue keeping a food log. If you have your meal plan well-established, log your food every other week to keep yourself on track. Don't feel like you have to do it every day.
- Prepare for plateaus. The scale might not budge for a few weeks or even months after some initial weight loss. This is normal and to be expected. It's the body's natural process for adjusting to your new lower weight. Stay focused on your long-term goal, celebrate your successes and changes, and mix up your workouts to help overcome the plateau.
- Calorie adjustments for maintaining weight loss. Once you've reached your goal weight, you can increase your calories 100-200 per day as long as your activity level stays the same
- Treat yourself. Have a non-food reward for each goal you hit such as a massage, a new outfit, or an outing with friends and family
- Use the resources below to find new recipes, get expert advice, and support to stay motivated

Resources

Downloadable Resources from Bowflex™ Website (www.Bowflex.com/Resources)

- Grocery Shopping List for Fridge (Blank Form)
- 7 Day Meal Planning Form
- Additional Dinner Options
- Pre and Post Workout Fueling Guide

Questions & Support

- Ask questions, post suggestions, and connect with our online Bowflex™ Dietitian on the Bowflex Facebook page

Recipes

- www.wholeliving.com
- www.eatingwell.com
- www.whfoods.org
- www.livebetteramerica.org

Online food logs

- www.myfitnesspal.com
- www.loseit.com

Who Is Covered
This warranty is valid only to the original purchaser and is not transferable or applicable to any other person(s).

What Is Covered
Nautilus, Inc. warrants that this product is free from defects in materials and workmanship, when used for the purpose intended, under normal conditions, and provided it receives proper care and maintenance as described in the Product's Assembly and Owner's manual. This warranty is good only for authentic, original, legitimate machines manufactured by Nautilus, Inc. and sold through an authorized agent and used in the United States or Canada.

Terms
Warranty terms for products purchased in US/Canada are as stated below

- Frame 3 years
- Parts 3 years
- Electronics (Console) 1 year
- Labor 90 days
  (Labor support does not include the installation of replacement parts involved in the initial product assembly and preventative maintenance services. All repairs covered under the labor portion of the warranty must be preauthorized by Nautilus.)

For warranty & service of products purchased outside US/Canada, please contact your local distributor. To find your local international distributor, go to: www.nautilusinternational.com

How Nautilus Will Support the Warranty
Throughout the terms of the warranty coverage, Nautilus, Inc. will repair any machine that proves to be defective in materials or workmanship. Nautilus reserves the right to replace the product in the event a repair is not possible. When Nautilus determines replacement is the correct remedy, Nautilus may apply a limited credit reimbursement toward another Nautilus, Inc. brand Product, at our discretion. This reimbursement may be prorated based on length of ownership. Nautilus, Inc. provides repair service within major metropolitan areas. Nautilus, Inc. reserves the right to charge the consumer for travel outside these areas. Nautilus, Inc. is not responsible for dealer labor or maintenance charges beyond the applicable warranty period(s) stated herein. Nautilus, Inc. reserves the right to substitute material, parts or products of equal or better quality if identical materials or products are not available at the time of service under this warranty. Any replacement of the product under the terms of the Warranty in no way extends the original Warranty period. Any limited credit reimbursement may be prorated based on length of ownership. THESE REMEDIES ARE THE EXCLUSIVE AND SOLE REMEDIES FOR ANY BREACH OF WARRANTY.

What You Must Do

- Retain appropriate and acceptable Proof of Purchase.
- Operate, maintain, and inspect the Product as specified in the Product Documentation (Assembly, Owner's Manuals, etc.).
- Product must be used exclusively for the purpose intended.
- Notify Nautilus within 30 days after detecting an issue with the Product.
- Install replacement parts or components in accordance with any Nautilus instructions.
- Perform diagnostic procedures with a trained Nautilus, Inc representative if requested.

What Is Not Covered

- Damage due to abuse, tampering or modification of the Product, failure to properly follow assembly instructions, maintenance instructions, or safety warnings as stated in the Product Documentation (Assembly, Owner's Manuals, etc), damage due to improper storage or the effect of environmental conditions such as moisture or weather, misuse, mishandling, accident, natural disasters, power surges.
- A machine placed or used in a commercial or institutional setting. This includes gyms, corporations, work places, clubs, fitness centers and any public or private entity that has a machine for use by its members, customers, employees or affiliates.
- Damage caused by exceeding maximum user weights as defined in the Product's Owner's manual or warning label.
- Damage due to normal usage and wear and tear.
- This warranty does not extend to any territories or countries outside the United States and Canada.

How to Obtain Service
For Products purchased directly from Nautilus, Inc. contact the Nautilus office listed on the Contacts page of the products Owner's manual. You may be required to return the defective component to a specified address for repair or inspection, at your expense. Standard ground shipping of any warranty replacement parts will be paid by Nautilus, Inc. For products purchased from a retailer, you may be asked to contact your retailer for warranty support.

Exclusions
The preceding warranties are the sole and exclusive express warranties made by Nautilus, Inc. They supersede any prior, contrary or additional representations, whether oral or written. No agent, representative, dealer, person or employee has the authority to alter or increase the obligations or limitations of this warranty. Any implied warranties, including the WARRANTY OF MERCHANTABILITY and any WARRANTY OF FITNESS FOR A PARTICULAR PURPOSE, are limited in duration to the term of the applicable express warranty provided above, whichever is longer. Some states do not allow limitations on how long an implied warranty lasts, so the above limitation may not apply to you.

Limitation of Remedies
EXCEPT AS OTHERWISE REQUIRED BY APPLICABLE LAW, THE PURCHASER'S EXCLUSIVE REMEDY IS LIMITED TO REPAIR OR REPLACEMENT OF ANY COMPONENT DEEMED BY NAUTILUS, INC. TO BE DEFECTIVE UNDER THE TERMS AND CONDITIONS STATED HEREIN. IN NO EVENT WILL NAUTILUS, INC. BE LIABLE FOR ANY SPECIAL, CONSEQUENTIAL, INCIDENTAL, INDIRECT OR ECONOMIC DAMAGES, REGARDLESS OF THE THEORY OF LIABILITY (INCLUDING, WITHOUT LIMITATION, PRODUCT LIABILITY, NEGLIGENCE OR OTHER TORT) OR FOR ANY LOST REVENUE, PROFIT, DATA, PRIVACY OR FOR ANY PUNITIVE DAMAGES ARISING OUT OF OR RELATED TO THE USE OF THE FITNESS MACHINE EVEN IF NAUTILUS, INC. HAS BEEN ADVISED OF THE POSSIBILITY OF SUCH DAMAGES. THIS EXCLUSION AND LIMITATION SHALL APPLY EVEN IF ANY REMEDY FAILS OF ITS ESSENTIAL PURPOSE. SOME STATES DO NOT ALLOW THE EXCLUSION OR LIMITATION OF CONSEQUENTIAL OR INCIDENTAL TYPE DAMAGES SO THE ABOVE LIMITATION MAY NOT APPLY TO YOU.

State Laws
This warranty gives you specific legal rights. You may also have other rights, which vary from state to state.

Expirations
If the warranty has expired, Nautilus, Inc. may assist with replacements or repairs to parts and labor, but there will be a charge for these services. Contact a Nautilus office for information on post-warranty parts and services. Nautilus does not guarantee availability of spare parts after expiration of warranty period.

International Purchases
If you purchased your machine outside of the United States consult your local distributor or dealer for warranty coverage.

NAUTILUS | BOWFLEX | SCHWINN

EN

8020250.070119.B